Product Specs Sheets

Cover Page

Doppiolo 40/1G 3x

Features

- Magnifying Makeup Mirror
- Polished Gold Finish
- Chrome Plated ABS
- 3X Magnification
- Single Arm, Rotates in All Directions
- Free of Distortion
- Made in Italy

SKU# | Option:

- Doppiolo 40/1G 3x | Polished Gold

Finishes:

Polished Gold

*** WS Bath Collections reserves the right to revise dimensions or information on this sheet without notice**

Collection	Model |	Dimensions Metric	
Doppiolo	Doppiolo 40/1G 3x	*1 inch = 2.54 cm* *1 inch = 25.4 mm*	WS® BATH COLLECTIONS 1051 Lea Drive - Collegeville, PA 19426 Tel. 215 513 9400 - Fax 610 831 0215 www.wsbathcollections.com - info@wsbathcollections.com

Product Specs Sheets

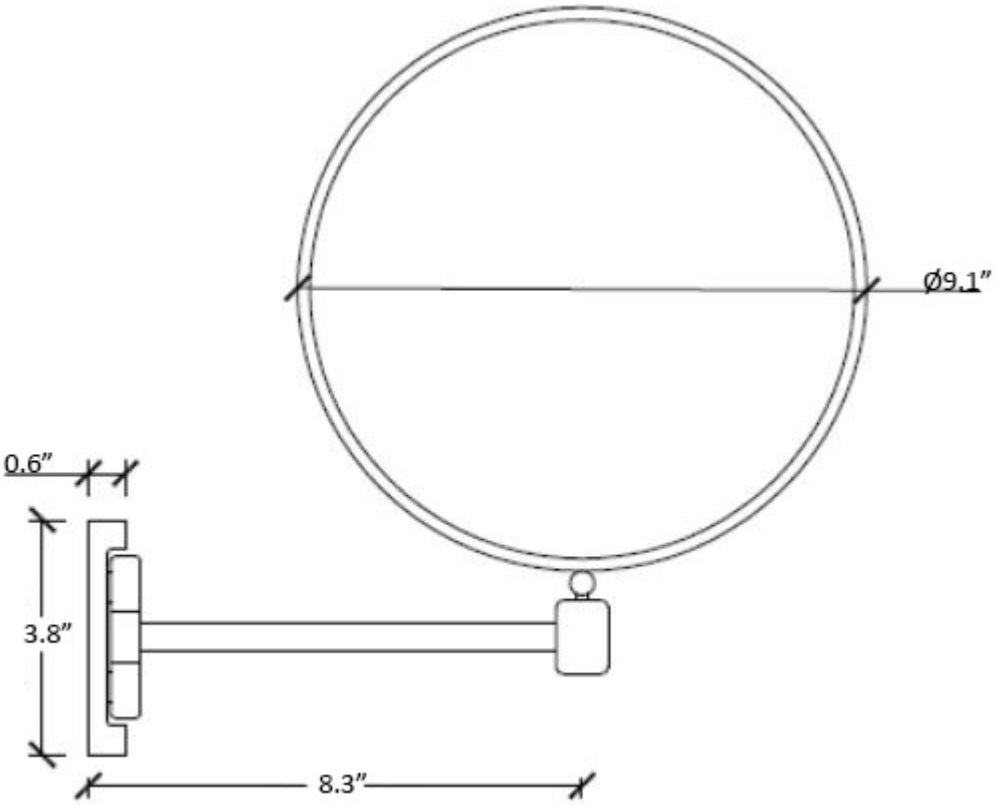

Collection	**Model** |	Dimensions Metric	
Doppiolo	Doppiolo 40/1	*1 inch = 2.54 cm* *1 inch = 25.4 mm*	WS® BATH COLLECTIONS 1051 Lea Drive - Collegeville, PA 19426 Tel. 215 513 9400 - Fax 610 831 0215 www.wsbathcollections.com - info@wsbathcollections.com