Side Chair - Grey
21"x 29"x 39"

Your furniture purchase is an investment. Here are a few tips to maximize the lifetime of your furniture with a minimal amount of effort. Properly caring for your furniture can help ensure that it looks great year after year.

Wood Furniture Maintenance:

- Always dust, wipe, and clean with the grain of the wood.
- Dust with a soft cloth. Dust will scratch the furniture surface if not removed properly.
- If a polished surface becomes foggy, rub it with a cloth dipped in a solution of one tablespoon vinegar to one quart of water. Rub softly with the grain until the surface is completely dry.
- Soap and water are not advisable for wood surfaces. Water can penetrate the finish and raise the grain on wood, causing damage.
- Remember to change dusting cloths frequently as dirty cloths may scratch your furniture's surface.

- Moisture is wood's worst enemy. Liquid spills should be gently wiped up immediately. Coasters should be used under all beverages.
- Do not allow rubber or vinyl materials to lie on the furniture. Chemicals in rubber may leave a stain. Put a strip of felt or leather under accessories that have rubber or vinyl.
- Heat creates a chemical change in the furniture's finish, which result in a white spot. Use protective pads under hot dishes, appliances, etc.
- Sunlight's ultraviolet rays can damage the finish of furniture. Do not place furniture directly against a heater or radiator and do not place in the path of hot streams of air from central heating. This will cause extreme localized drying of the wood.

Marble Top Maintenance:

The surface of the marble on your table has been polished and sealed to create a generally non-porous surface. The stone has many natural characteristics including veining, hairline cracks, and color variations, which make up the stone's beauty.

To maintain the beauty of your marble:

- Protect surfaces from scratching, staining and etching by:
  - Keeping them free of debris or sharp objects.
  - Wiping up spills immediately
  - Avoiding contact with chemicals (particularly acid-based materials)
- Clean with PH neutral products or those especially formulated for use on stone.
- It is not recommended to use a water-based solvent for dark marble as it will remove the polish from the surface.

Caring for the Fabric on Upholstered Furniture:

- Frequent vacuuming of the entire upholstered area will prevent dust from settling into the fibers.
- Professional cleaning is always recommended for all upholstered pieces.
- Do not use cleaning products containing brightening agents.

Assembly Instructions

Do not fully tighten bolts & screws until the entire item is completely assembled

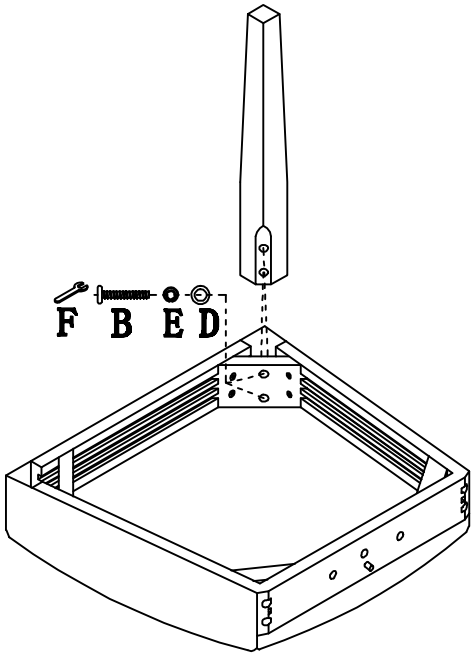

STEP#1

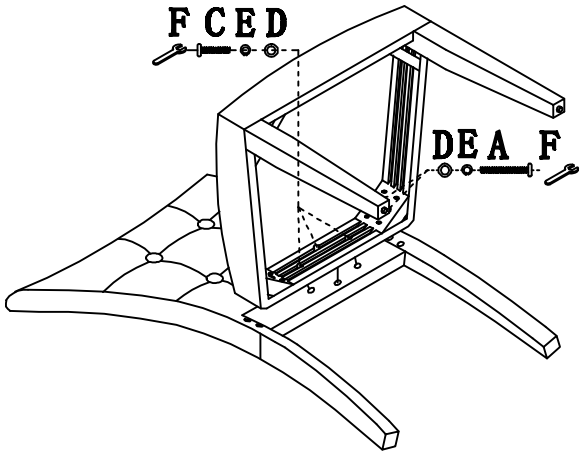

STEP#2

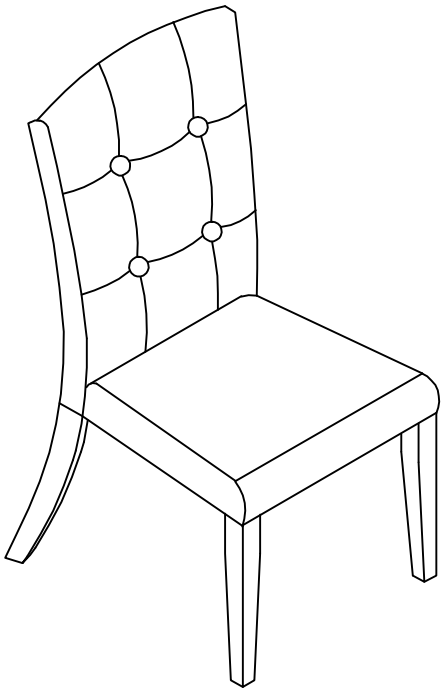

STEP#3

Hardware Pack

A		5/16"x3-1/2"	4PCS
B		5/16"x2-1/2"	4PCS
C		5/16"x2"	3PCS
D	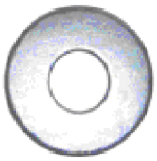	5/16"x22mm	11PCS
E		5/16"	11PCS
F		5/16"	1PC

COMPLETE HARDWARE

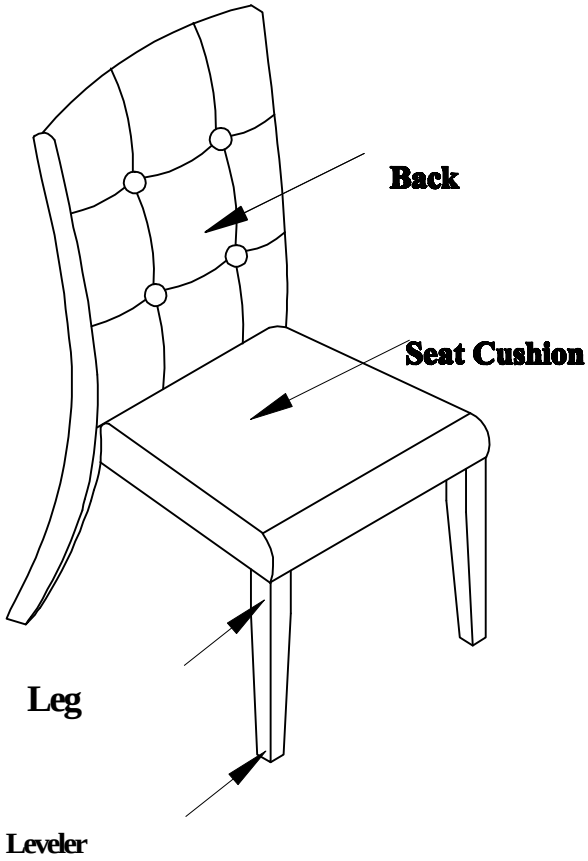

PRODUCT DETAILS	
BACK	RUBBERWOOD
SEAT BOX	HARDWOOD
LEG	RUBBERWOOD
COLOR OF PU	GREY
PRODUCT SIZE	20.5"x28.5"X40"
CARTON SIZE	40.25"x14"X21"
NET WEIGHT	32.71 LBS
GROSS WEIGHT	38.43 LBS
CU.FT.	6.85 '

MADE IN CHINA

Dining Chairs

Assembly Troubleshooting Guide

The most important element of correct chair assembly is to tighten the bolts as directed. Prematurely tightening the bolts can lead to numerous issues and will lengthen the assembly time. Listed below are the most common issues in chair assembly and their easy solutions.

PROBLEM: Chair is unlevel.

Cause 1:

Unlevel chairs can occur if the bolts are fully tightened before all bolts are attached. There is a variance in the alignment of this chair to allow the chair to be assembled more easily.

Solution:

Loosen each bolt in the seat box (front legs, back corner blocks and back apron) until they are finger tight. Place the chair upright on the floor. Sit in the chair for about 30 seconds. Carefully turn the chair upside down and tighten each bolt. The chair will now be level.

Cause 2:

Unlevel chairs can occur if one or more of the floor glides are missing from the bottom of the chair leg.

Solution:

Request a set of floor glides from the e-mail address below.

PROBLEM: Bolts do not fit properly.

Cause:

This issue can occur when the bolts are tightened fully before all bolts are attached. There is a variance in the alignment of the bolts to allow the chair to be assembled more easily. Tightening the bolts prematurely can cause the holes for the other bolts to become slightly misaligned, causing the remaining bolts not to fit properly.

Solution:

Make sure each bolt in the seat box (front legs, back corner blocks and back apron) is loosened until finger tight. This will allow you to realign the holes, and the bolts will not fit properly.

Questions?