ASSEMBLY INSTRUCTION

SKU CODE : WF318116 / WF318117
ITEM : UPHOLSTERED BED (FULL)

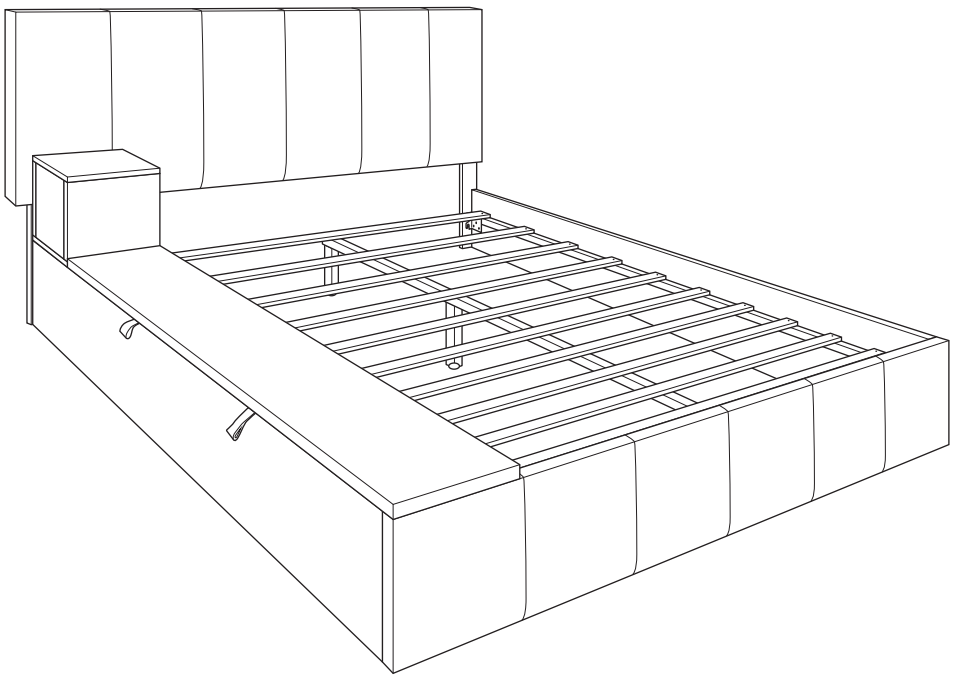

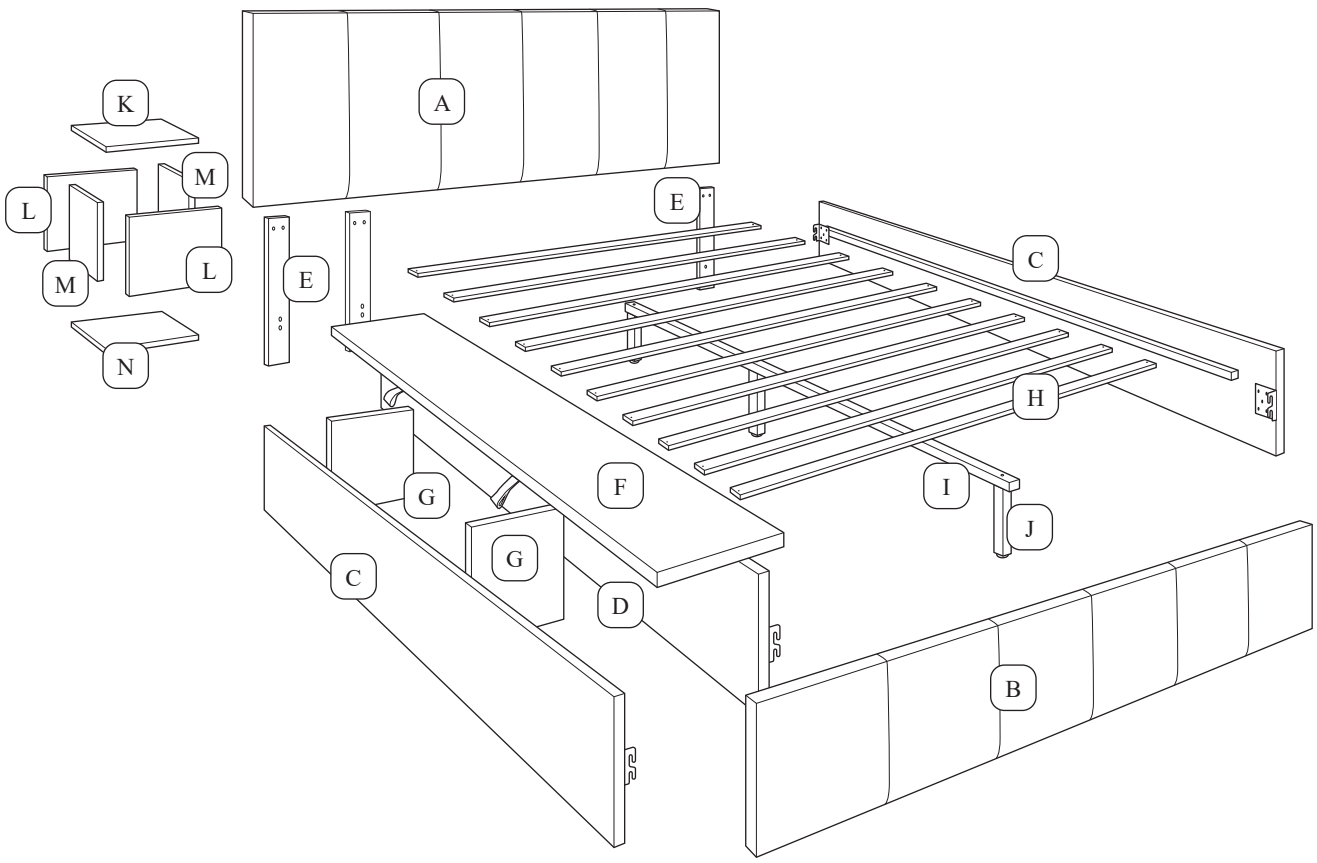

Bed Parts are shipped inside a compartment
in the back of the headboard.

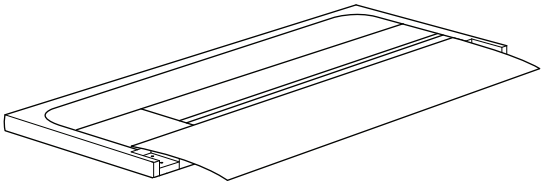

NO	PART LIST	QTY
A	Headboard 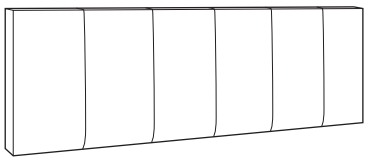	1 pc
B	Footboard 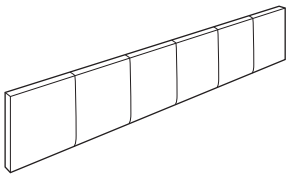	1 pc
C	Side Rail 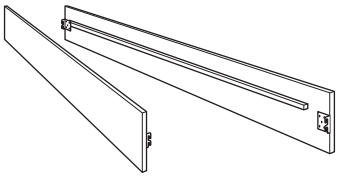	2 pcs
D	Center Side Rail 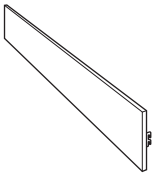	1 pc
E	Headboard Leg 	3 pcs
F	Top Side box 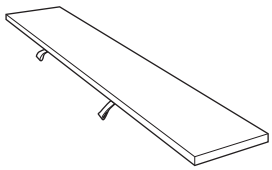	1 pc
G	Center Side box 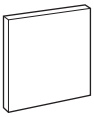	2 pcs
H	Bed Slat 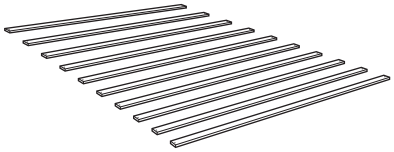	1 Set
I	Bed Center Rail 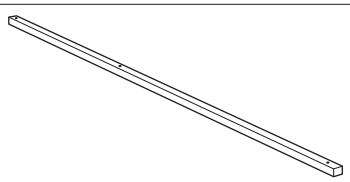	1 pc
J	Bed Center Rail Support 	3 pcs

NO	PART LIST	QTY
K	Small Box Top 	1 pc
L	Small Box Side i 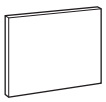	2 pcs
M	Small Box Side ii 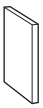	2 pcs
N	Small Box Bottom 	1 pc

NO	PART LIST	QTY
1	JCBB Bolt M8 x 20 mm 	12 pcs
2	JCBB Bolt M8 x 35 mm 	6 pcs
3	JCBC Bolt M6 x 70 mm 	3 pcs
4	JCBC Bolt M6 x 16 mm 	32 pcs
5	CSK Screw M4 x 30 mm 	20 pcs
6	CSK Screw M4 x 20 mm 	14 pcs

NO	PART LIST	QTY
7	CSK Screw M4 x 16 mm 	8 pcs
8	CSK Screw M4 x 12 mm 	10 pcs
9	Spring Washer M8 	6 pcs
10	Flat Washer M8 	6 pcs
11	Adjuster Screw M6 x 23 mm 	3 pcs
12	L-bracket (2 Hole) 20 X 20 X 18 X 1.4 mm 	2 pcs
13	L-bracket With M8 Hole (2 Hole) 18 X 20 X 2 mm 	16 pcs
14	Hinges 50 X 30 X 1.2 mm (4 Hole) 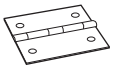	2 pcs
15	Allen Key M4 	1 pc
16	Allen Key M5 	1 pc
17	Lift Spring Hings 	2 pcs

Read this instruction carefully. Remove all wrapping material, staples and straps from the carton. See hardware and furniturepart list for guidance. Be sure you have all wooden furniture parts on a clean and flat surface, such as carpet or rug, to preventfrom being scratched.

CAUTION :
1. Do not Full Tighten the nut or screw until all ready to assemble.
2. Do not Over Tighten the nut or screw to avoid causing damages to the thread.
3. Keep all hardware part out reach of children.

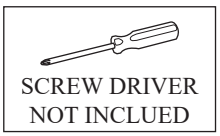

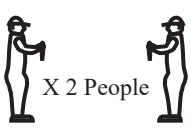

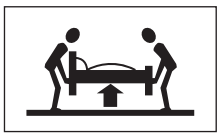

STEP 1

2	9	10	16
6 pcs	6 pcs	6 pcs	1 pc

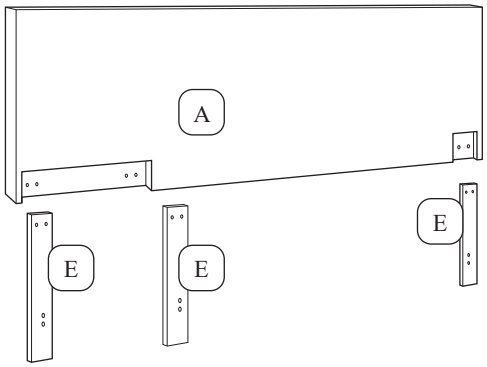

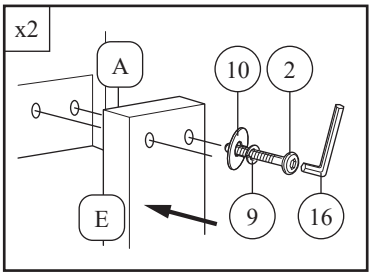

STEP 2

1	16
12 pcs	1 pc

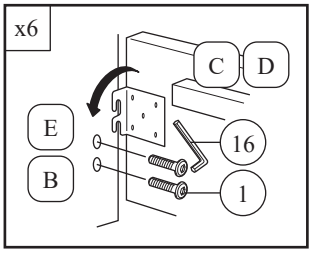

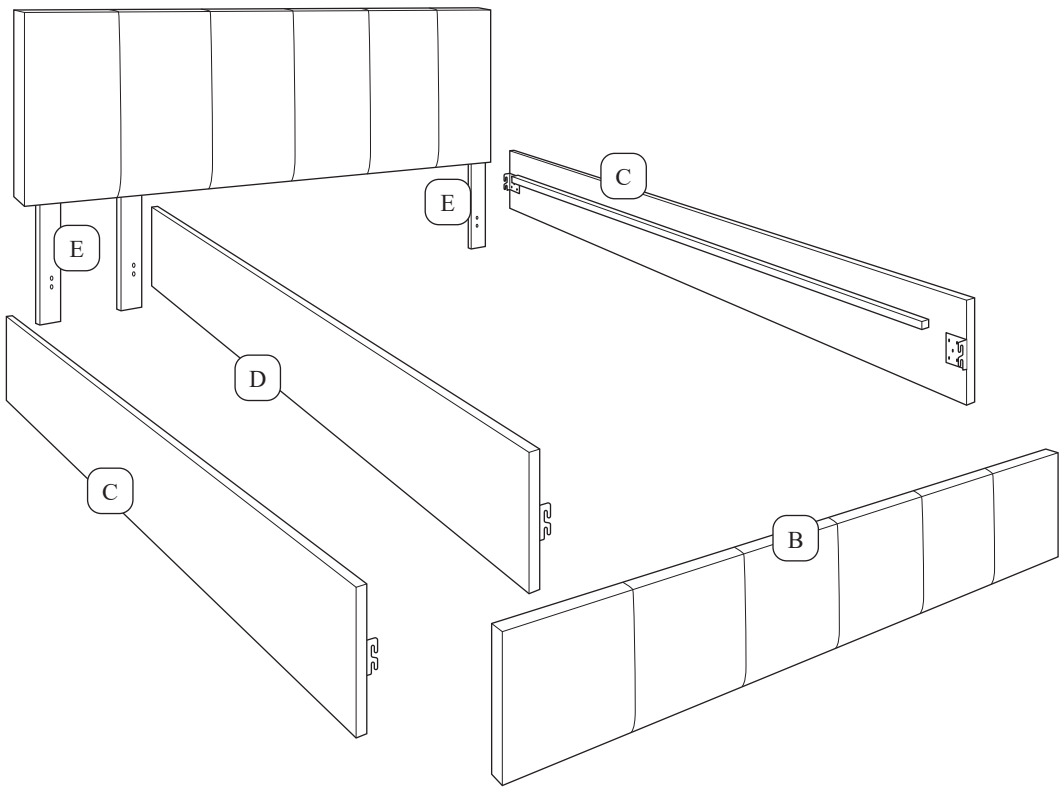

STEP 3

4	13	15
16 pcs	8 pcs	1 pc

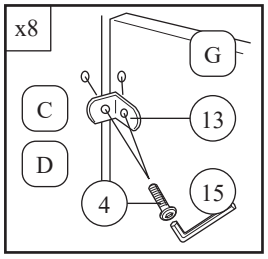

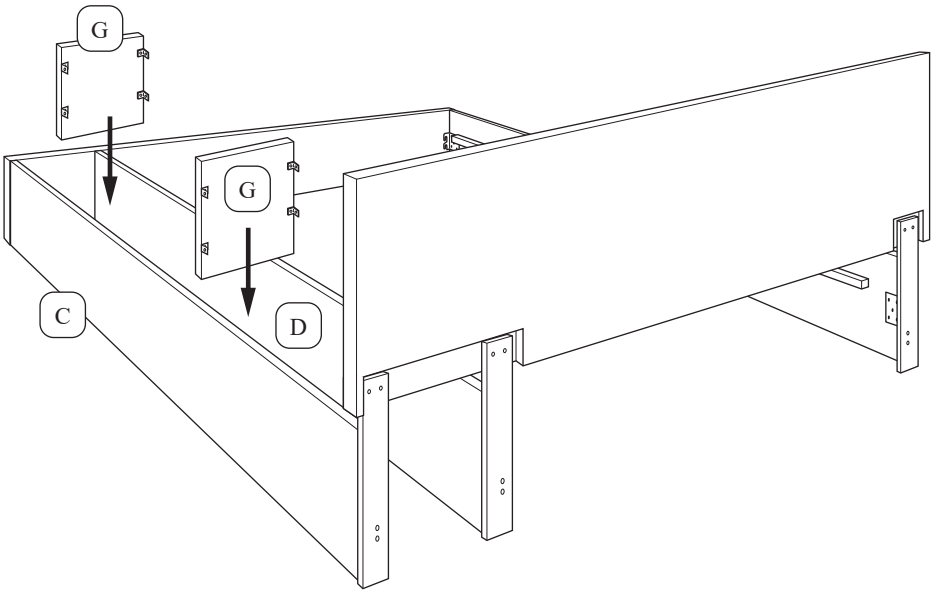

STEP 4

6	7	17
6 pcs	6 pcs	2 pcs

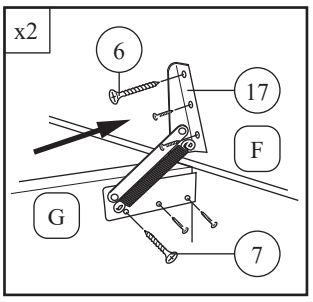

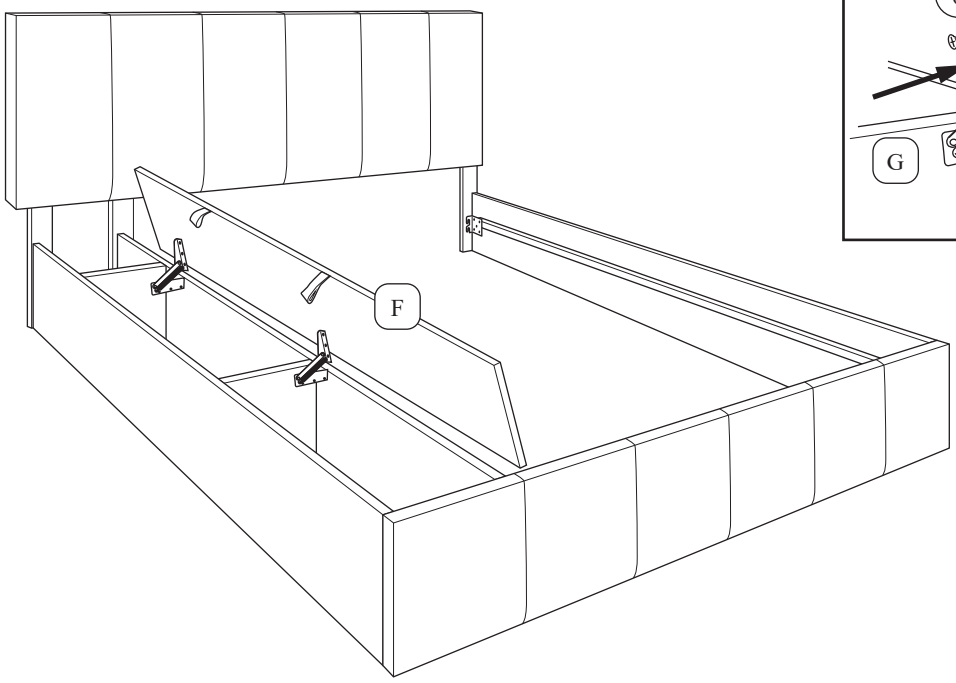

STEP 5

4	6	8	13	14	15
16 pcs	8 pcs	8 pcs	8 pcs	2 pcs	1 pc

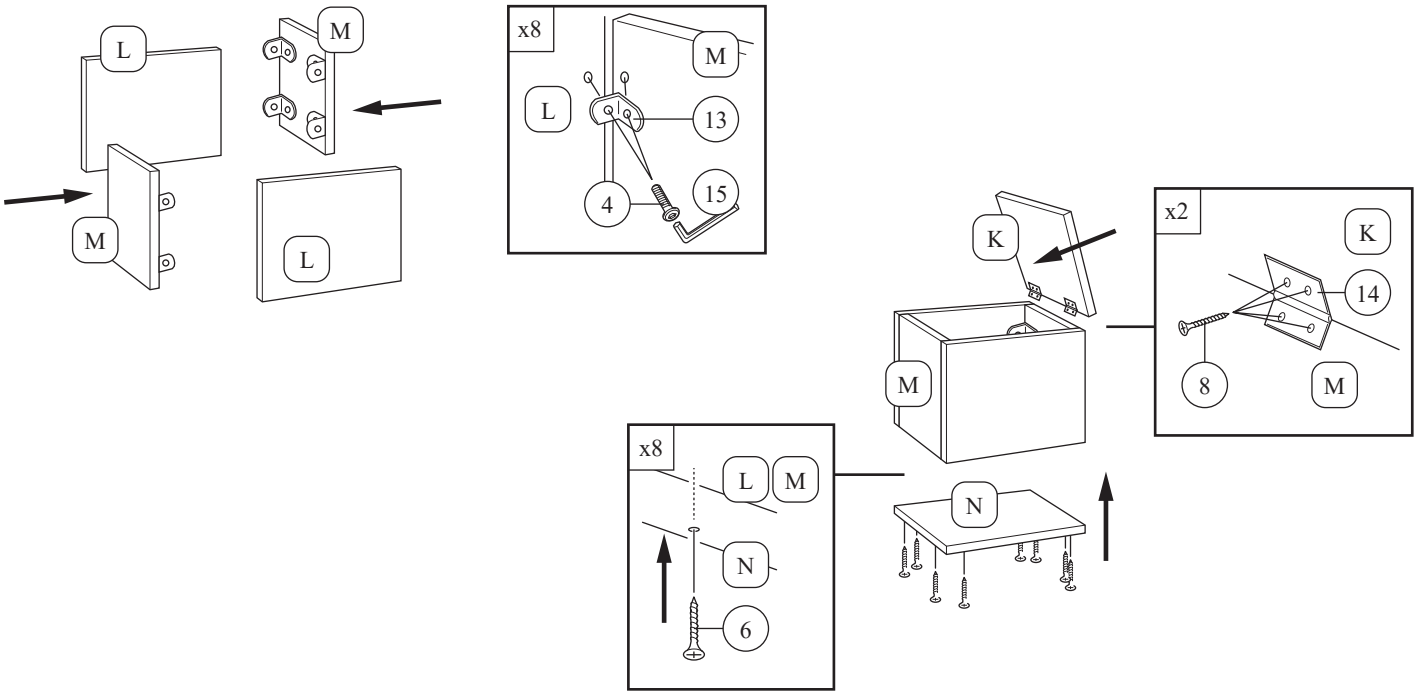

STEP 6

7	8	12
2 pcs	2 pcs	2 pcs

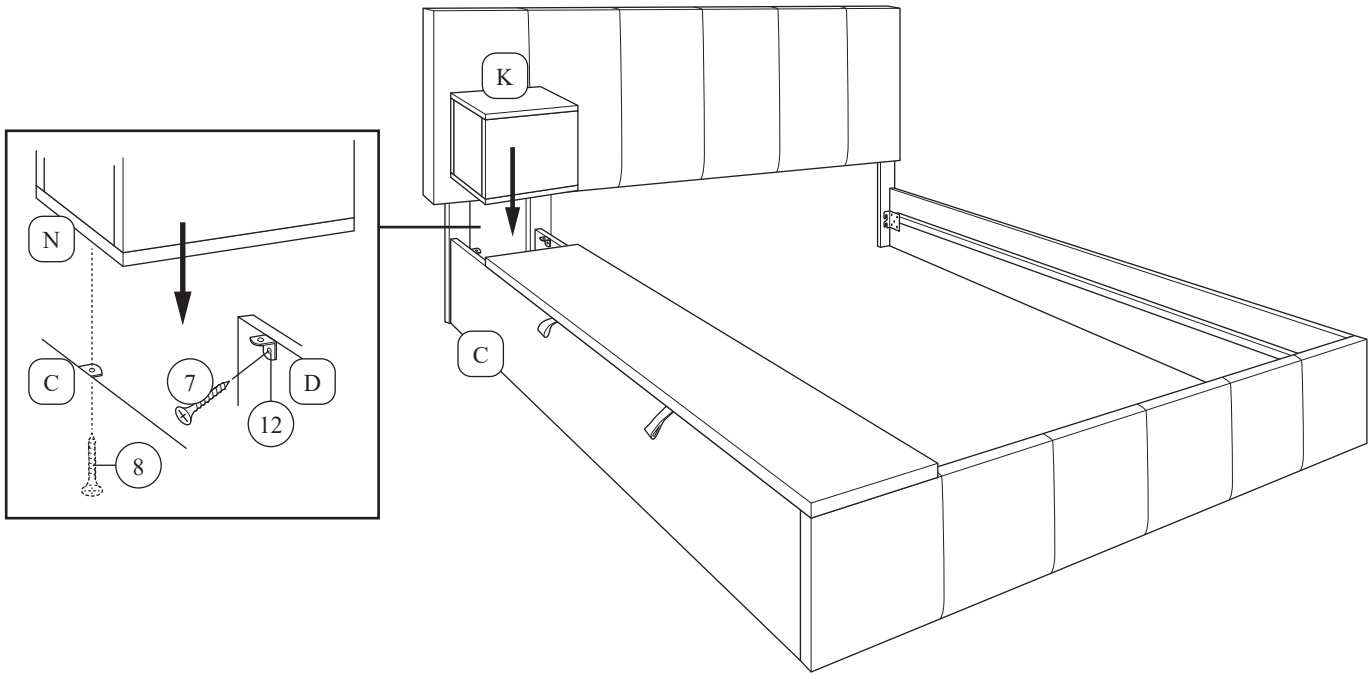

STEP 7

3	5	11	15
			
3 pcs	20 pcs	3 pcs	1 pc

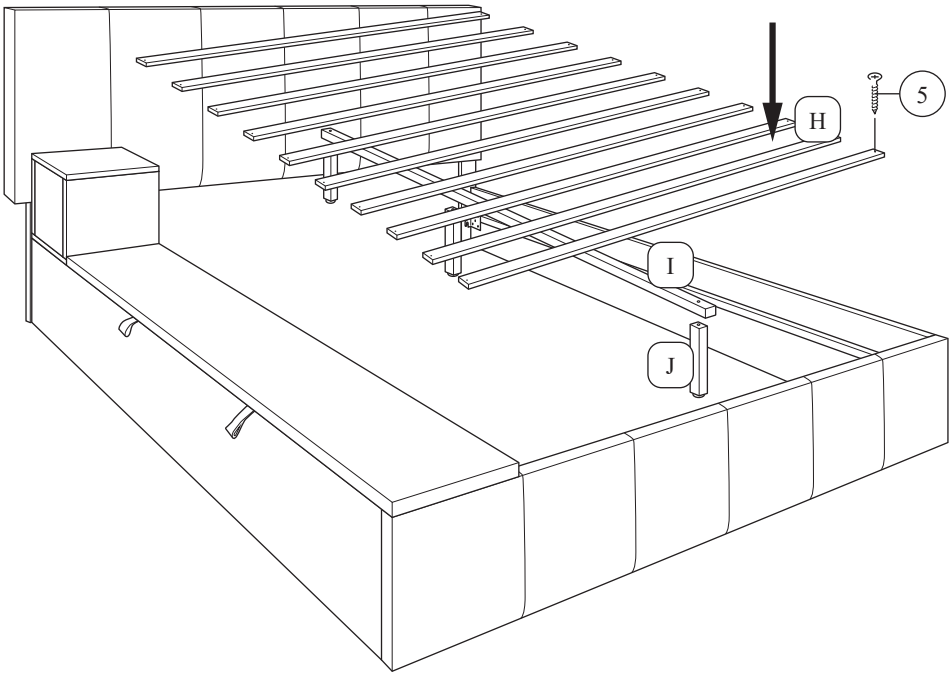

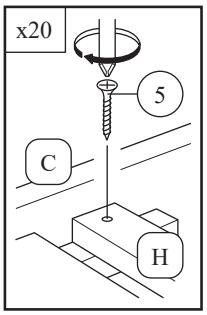

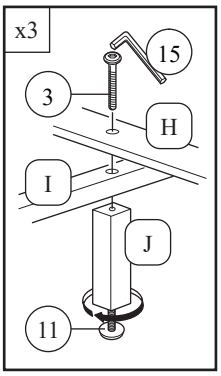

STEP 8

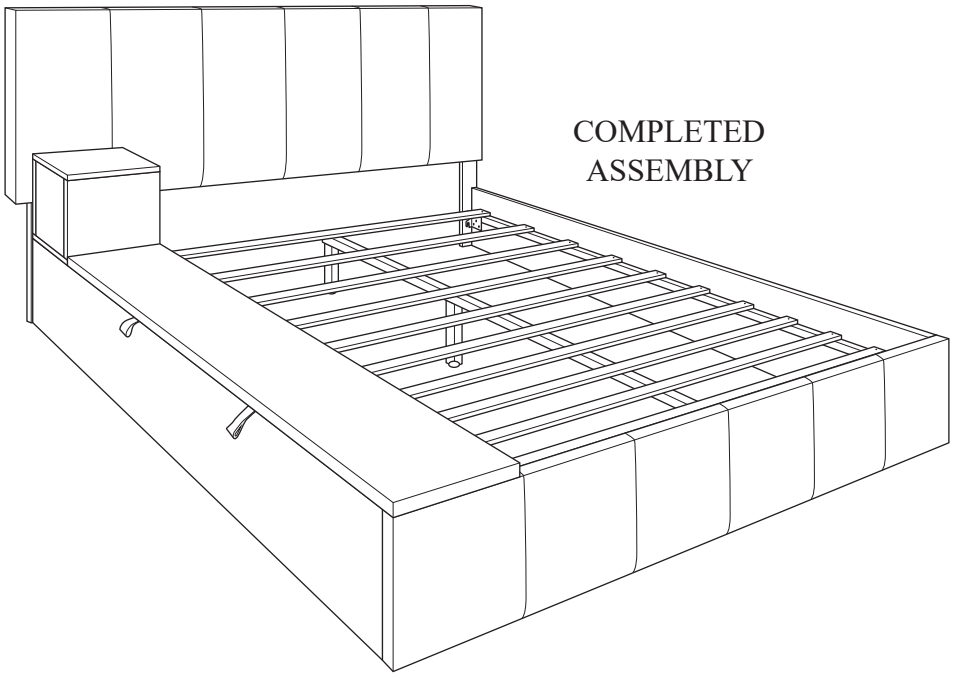

COMPLETED ASSEMBLY