SKU# NB2534

BELIZE 15X30-FT OVAL 52-IN DEEP STEEL WALL POOL

INSTRUCTION MANUAL

Questions, problems, missing parts?

Contact Blue Wave Customer Service at 1-800-759-0977, Monday – Friday. 8am – 5pm (CST)

V1: 02/25

THANK YOU!

Thank you for purchasing this product. We work around the clock and around the globe to ensure that our products maintain the highest possible quality. However, in the rare case of issues during assembly or use of this product, please contact **Blue Wave Customer Service at 1-800-759-0977** for immediate assistance before contacting your retailer. Please read the warranty information at the back of these assembly instructions for further details.

SAVE THIS INSTRUCTION MANUAL

Use of unauthorized replacement parts voids the warranty.

ATTENTION INSTALLER! THIS MANUAL CONTAINS IMPORTANT INFORMATION ABOUT THE INSTALLATION, OPERATION, AND SAFE USE OF THIS POOL AND MUST BE FURNISHED TO THE END USER OF THIS PRODUCT. FAILURE TO READ AND FOLLOW ALL INSTRUCTIONS COULD RESULT IN SERIOUS INJURY.

SAFETY INSTRUCTIONS

WARNING: Children have drowned in swimming pools.

WARNING: Ensure active adult supervision at all times. Do not leave children unsupervised in or around the pool. Keep them within arms reach.

WARNING: Consult local municipality, water authority, and building codes in regard to the use of water and/or water restrictions relating to this product.

WARNING: Pool fencing laws affect this product, consult the local municipality for applicable building codes. Abide by state and federal law requirements such as fencing, enclosures, childproof gates, etc.

WARNING: Always remove pool ladder when not in use. Store in a place where it is not accessible to children.

DANGER: Prevent the risk of accidental drowning. Extreme caution must be exercised to prevent unsupervised access by children. To avoid accidents, ensure that children cannot use the pool unless they are always supervised by an adult. NEVER LEAVE CHILDREN UNATTENDED.

RISK OF ELECTRIC SHOCK: Connect the filter pump only to a grounding type receptacle protected by a GFCI (Ground Fault Circuit Interrupter). Use a qualified electrician to install the GFCI, which has a maximum rate of 30A.

WARNING: Always know where the cut-off switch for the pump is, so it can be turned off in an emergency. It is necessary to have the GFCI Cut-Off Switch plug accessible after installation of the pool.

WARNING: To avoid electrocution, do not permit electric devices i.e., electric lights, telephone, radio, television, hair dryer, etc. within 8-ft of this pool.

WARNING: Do not touch the filter pump unless the area around it is completely dry.

WARNING: NEVER allow horseplay, diving, or jumping into or around the pool.
WARNING: NEVER jump into the pool via any decks or other raised surface, the water level of the pool is shallow. Serious injury, paralysis, or death could result.

CAUTION: It is advisable to wear protective gloves when assembling pool.

WARNING: Follow all safety and installation instructions provided with the filtration system, ladder, and accessories

GENERAL WATER SAFETY

- ALWAYS supervise children around water.
- Ensure a pool fence is correctly installed and functioning if it is required by your local municipality or state code.
- Follow all local and National Pool Safety Codes.
- Learn CPR and keep in practice.
- Post emergency phone numbers near a phone and the pool.
- Teach your children to swim as early as possible.
- Keep any object that could be used by a child to climb into the pool at least 4-ft away from the side of the pool.
- Read these safety instructions to your children often.
- Prepare yourself mentally for any situation that may occur. You may be required to offer adequate aid and assistance.
- Many swimming pool and water safety publications are available online. You are urged to review them and share with all members of your family.

GENERAL WATER SAFETY (CONTINUED)

- Name only one safety supervisor when people are in the pool.
- Reinforce supervision when there are several users in the swimming pool. Have personal flotation aids available (for people who cannot swim).
- Wet your neck, arms, and legs before you enter the water.
- Do not allow children who are unable to swim to enter the pool without swim vest or approved life jacket, and without adult supervision. Flotation devices are not a substitute for adult supervision.
- Do not leave toys near or in the pool without supervision.
- Always keep the water clear and sanitized.
- Store the water treatment products away from children's reach.
- Do not leave children alone when you are talking on or looking at your phone.
- Always keep a pool buoy and pool pole at the pool side.
- Keep the pool fence gate shut when the pool is not occupied.
- If possible, use an electronic pool alarm that can detect someone falling into a pool.
- Install all warning and danger decals and signs as instructed.
- Contact the dealer or retailer for additional signs if deemed necessary.

THERE IS NO REPLACEMENT FOR CLOSE ADULT SUPERVISION OF CHILDREN

SAVE THESE INSTRUCTIONS

PARTS LIST

NB2534

See pages 7 and 8 for schematic.

REF. #	PART #	MFG. #	DESCRIPTION	QTY.
WALL CARTON (PC5212, 301552-THT-W)				
15	-	-	15x30-FT Belize Wall	1
14	NBP1019	8100	Plastic Coping Strips	19
NBP1021 - 0113 Wall Bolt Hardware Pack contains:				
10	-	0411	1/4-IN Reinforcing Washer	51
10	-	0513	1/4 x 1/2-IN Truss Head Screw	26
10	-	0611	1/4-IN Hex Nut	26
RAIL CARTON (PC5080, 3015-5/8RAIL-2)				
13	NBP1025	1615	5/8-IN Top and Bottom Rail	32
FRAME CARTON #1 (PC5145, 301552-6H-WS-2)				
12	NBP1023	1164WS	6-IN Top Seat	16
19	NBP1028	2366WS	5-IN Vertical	10
FRAME CARTON #2 (PC5025, 3015-6P-WS-3)				
16	NBP1029	2463WS	6-IN Seat Cover	10
18	NBP1030	2464WS	6-IN Seat Cover Bracket	10
4	NBP1033	3462WS	6-IN Side Seat Cover	6
17	NBP1068	2168	6-IN Resin Top Joint	10
20	NBP1069	2268	6-IN Resin Bottom Joint	10
5	NBP1004	3177	6-IN Resin Side Top Joint	6
6	NBP1070	3234	5/8-IN Resin Side Bottom Joint	6
Hardware Pack contains:				
22	NBP1203	0341	#12 Sheet Metal Screw	158
22	NBP1076	2402WS	Seat Cover Cap	16
BRACED OVAL FRAME CARTON #3 (PC5147, 301552-RG11-WS-A)				
1	NBP1006	3314WS	Braced Oval Side Vertical	6
2	NBP1209	4106WS	Brace	6
3	NBP1210	5239	Braced Oval Horizontal Support	6
11	NBP1011	6254	Pressure Plate	6
9	NBP1012	7224	Braced Oval End Strap	6
10	NBP1013	7244	Middle Strap	6
NBP1000 - 0104 Braced Oval Bolt Pack contains:				
7	-	0341	#12 Sheet Metal Screw	24
7	-	0423	Plain Washer	36
7	-	0623	M8 Hex Nut	36
7	-	0923	M8 x 20 Hex Head Bolt	36
NBP1002 - 0106 Tension Strap Bolt Pack B contains:				
8	-	0623	M8 Hex Nut	81
8	-	0923	M8 x 20 Hex Head Bolt	81
SKIMMER CARTON (NA324ASM)				
23	NA324ASM	NA324	Widemouth Skimmer and Return	1

PARTS LIST (CONT.)

ADDITIONAL EQUIPMENT REQUIRED:

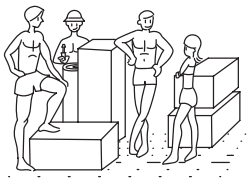

Friends

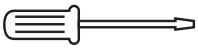

Screwdriver

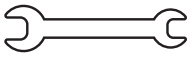

Wrench

Knife

Spray Paint

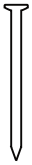

8-IN Nail

Mason Sand

Duct Tape

Measuring Tape

Gravel

Level

Roller

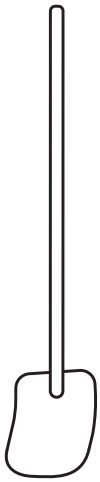

Shovel

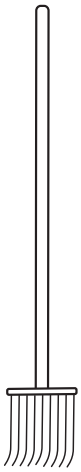

Rake

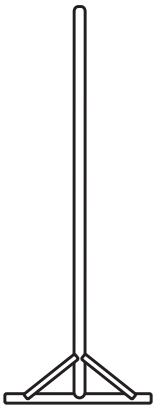

Tamping Tool

PARTS LIST (CONT.)

SIDE BRACES

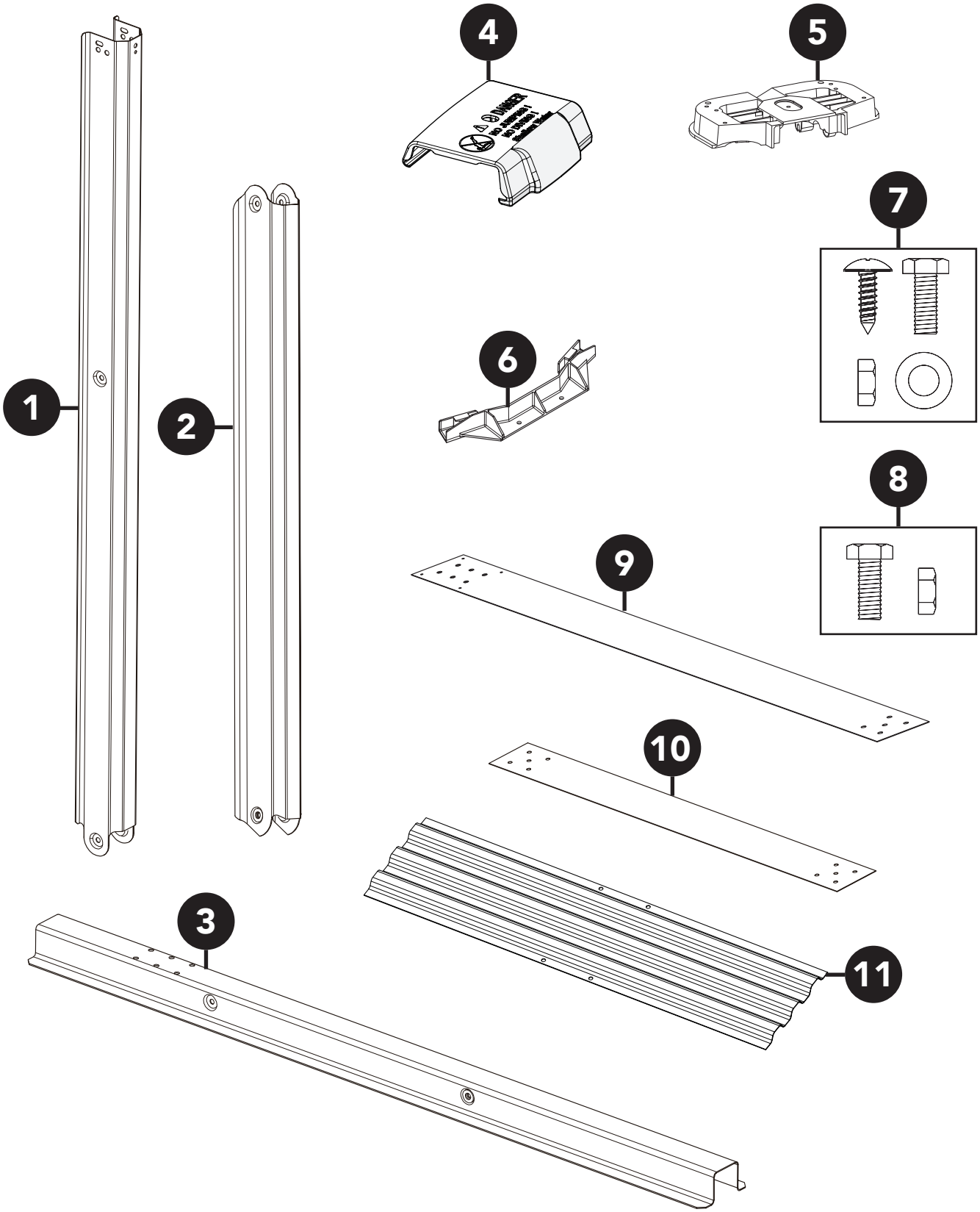

PARTS LIST (NOT TO SCALE)

POOL AREA

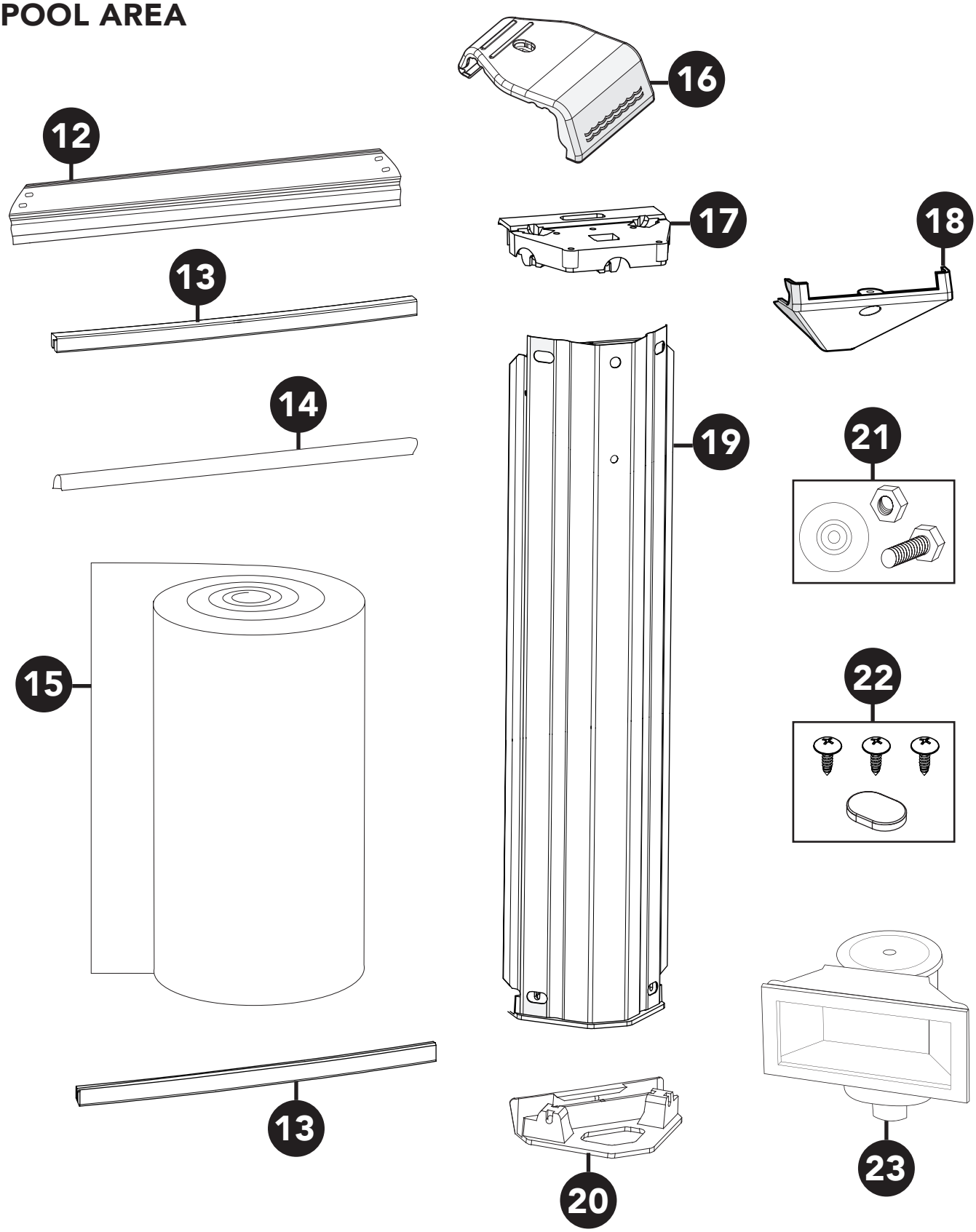

GENERAL INFORMATION

Before attempting to set up the pool, read the entire instructions. There are certain areas in the instructions that are extremely important to follow exactly as written and/or pictured. Any deviation from these instructions voids warranty of the pool and could cause bodily harm or damage to your property.

Open the cartons and remove all parts except steel wall and liner. Before pool assembly, you must identify, count and check all parts for assembly by parts list. Familiarize yourself with all of the parts. Refer to the parts list.

NOTE

Do not start the installation of your pool unless you have an entire day to finish the work. Do not try to set up your pool on a windy day. The wall will be difficult or even impossible to handle.

POOL SIZE	POOL PERIMETER	# OF UPRIGHTS	# OF PATIO BLOCKS	AMOUNT OF SAND NEEDED	# OF WALL FOAM ROLLS NEEDED*	# SPRAY ADHESIVE CANS NEEDED*	# OF POOL COVES NEEDED*
12 X 24-FT	15 X 30-FT	10	10	50.84 YD^3	1 - 85-FT ROLL	4	16
15 X 30-FT	18 X 36-FT	10	10	79.44 YD^3	1 - 100-FT ROLL	4	19
18 X 33-FT	21 X 39-FT	12	12	104.87 YD^3	1 - 100-FT ROLL	4	22

* See page 23 for buying options

CHOOSING A LOCATION

1. When choosing a site, the area around the pool must be large enough to accommodate patio furniture and other pool accessories.

2. Determine where your filtration and skimmer will be located. It must be connected to a grounded 110 volt electrical outlet, with a G.F.I. (Ground Fault Interrupter).

3. The pool must be in reach of your water supply. Although the water should not be drained, but kept clean through filtration and chemicals, there should be drainage facilities near in case of need.

4. The perimeter of the pool area must be level and firm. All grass and sod under the entire pool area must be dug out to avoid unpleasant odors from decomposition due to lack of air. If the ground has been treated with chemicals or weed killer allow two weeks before setting up the pool.

5. Remove sharp objects, stones, twigs, pebbles, roots, etc. as they may damage the liner. Do not set up the pool on concrete, asphalt, tar paper, peat moss, coarse sand, gravel, or where nut grass has been planted. Liner is not warranted against this.

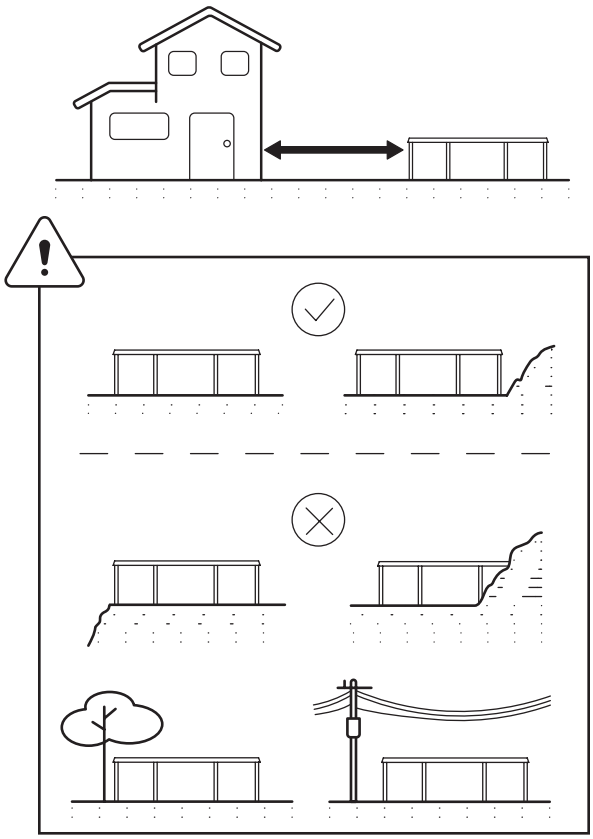

ASSEMBLING THE SIDE BRACES

1. Connect the side vertical to the horizontal support by using M8 x 20 Hex Head Bolts and plain washers (NBP1000) in the marked areas. Insert the bolts and washers from the outside and use M8 nuts to fasten tightly from the inside.

2. Connect the brace to the side vertical and the horizontal support by using M8 x 20 Hex Head Bolts and plain washers (NBP1000).

3. Connect the side top joint to the top of the side vertical by using #12 sheet metal screws (NBP1000). Thread the screws into the side top joint from the inside of the side vertical.

4. Connect the end strap to the horizontal support by using M8 x 20 Hex Head Bolts and plain washers (NBP1002).

5. Connect the side bottom joint to the top of the end strap using #12 sheet metal screws (NBP1000).

5. Assemble all side braces and set aside.

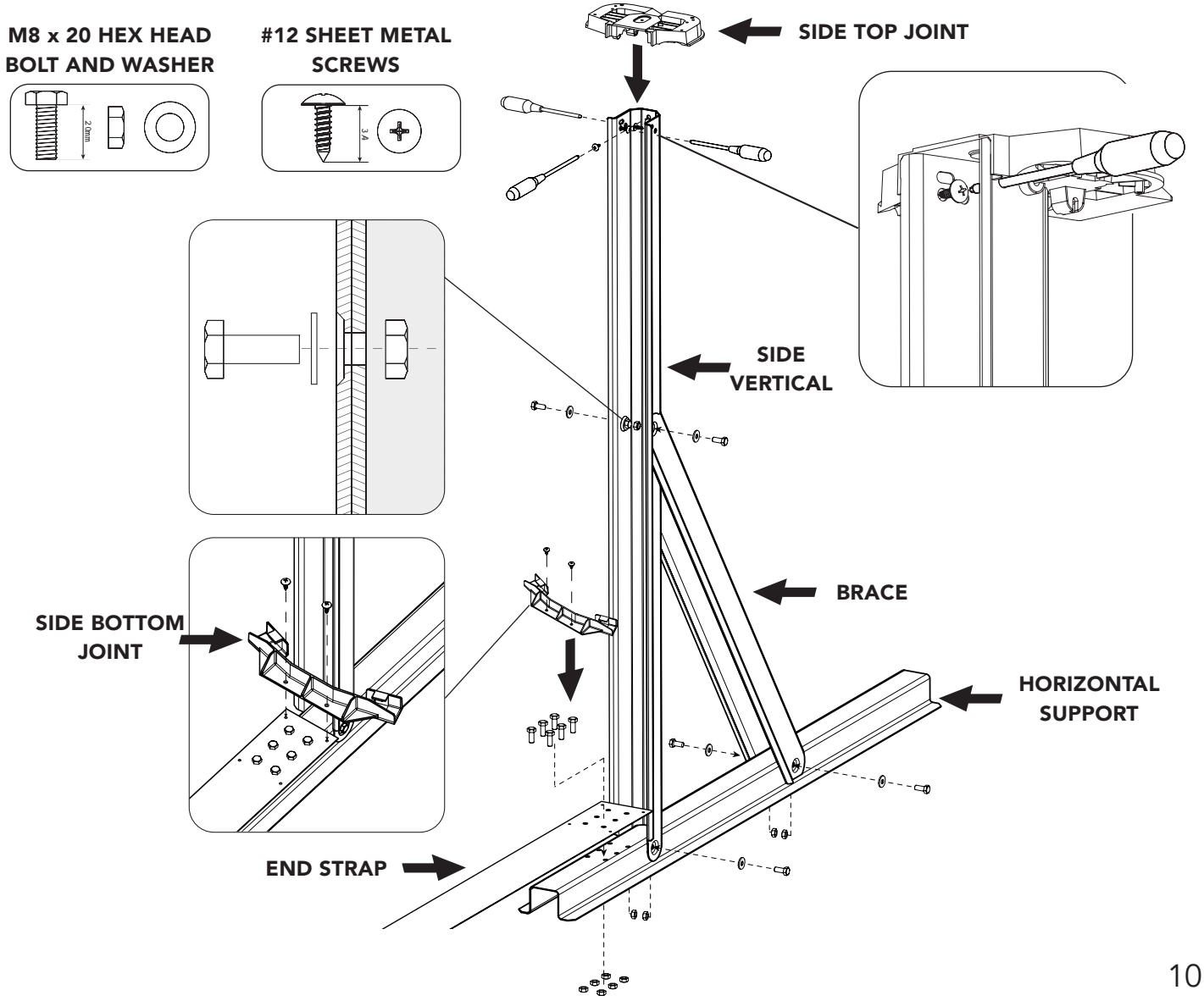

PREPARING THE POOL SITE

1. Determine the overall pool area by marking out a rectangular space adding 3-FT to each side and 1.5-FT to each radius. The extra 6-FT on the width side will allow room for the side braces.

POOL SIZE	POOL PERIMETER
12 X 24-FT	15 X 30-FT
15 X 30-FT	18 X 36-FT
18 X 33-FT	21 X 39-FT

2. After marking out the pool area, locate the dead center of the area and mark it with an 8-IN nail.

3. To determine the radius of the pool's swimming area, divide the length of the pool by half. If your pool is 24-FT long, the center line will be 12-FT long. If your pool is 30-FT long, the center line will be 15-FT long. Place 8-IN nails in both ends of this line.

4. From those two end points, have a friend hold a string or tape measure to create the circumference of the swimming area and mark it with spray paint.

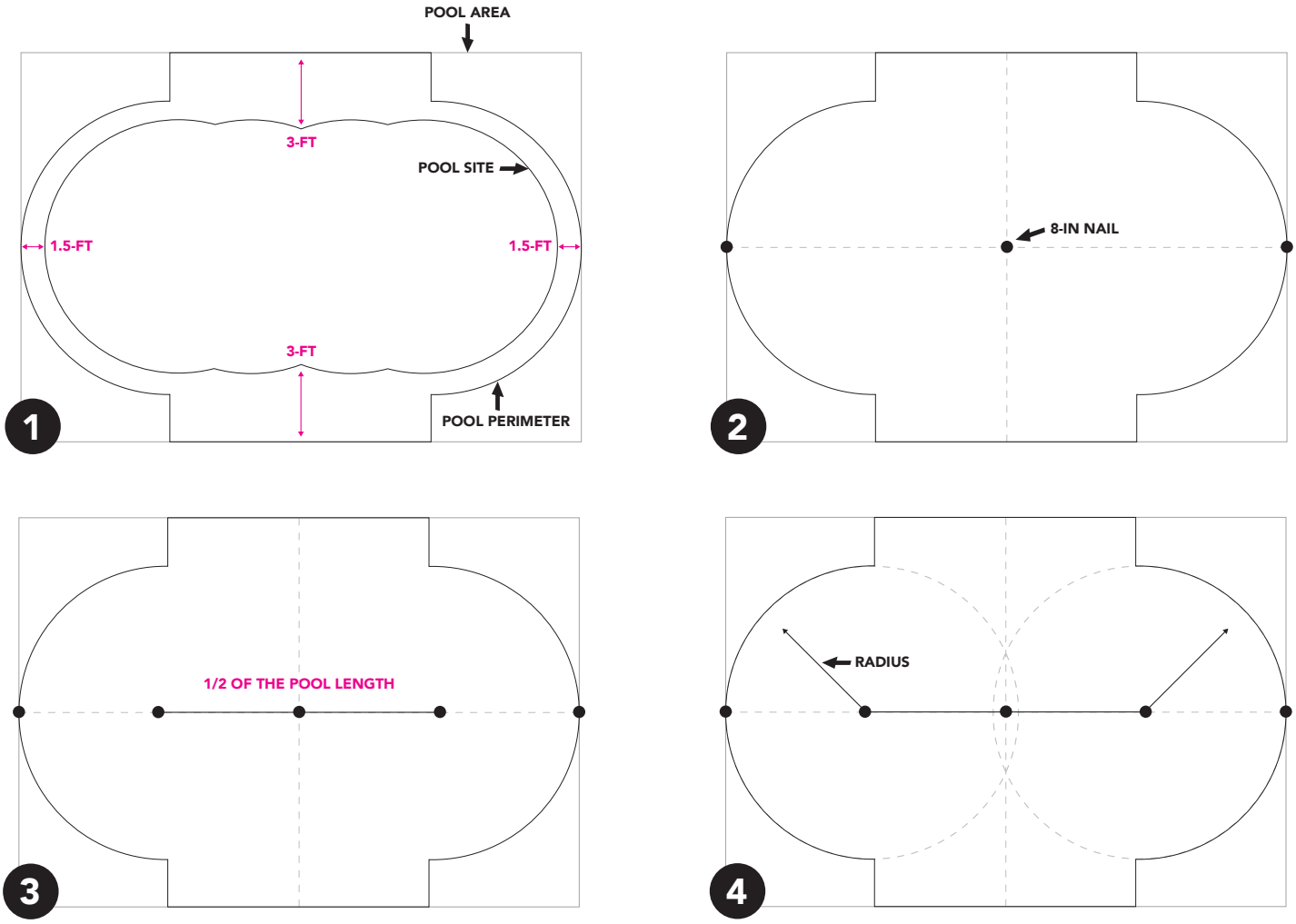

PREPARING THE POOL SITE (CONT.)

12 x 24-FT POOLS

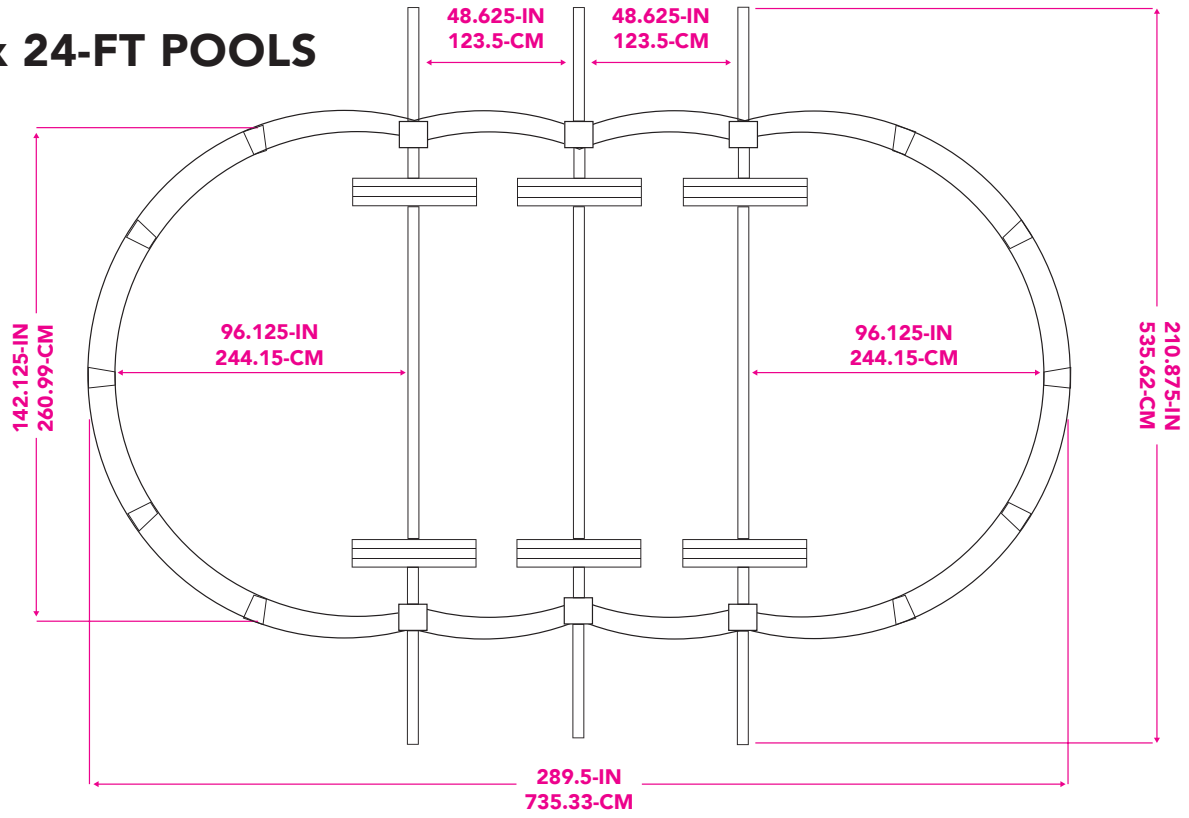

15 x 30-FT POOLS

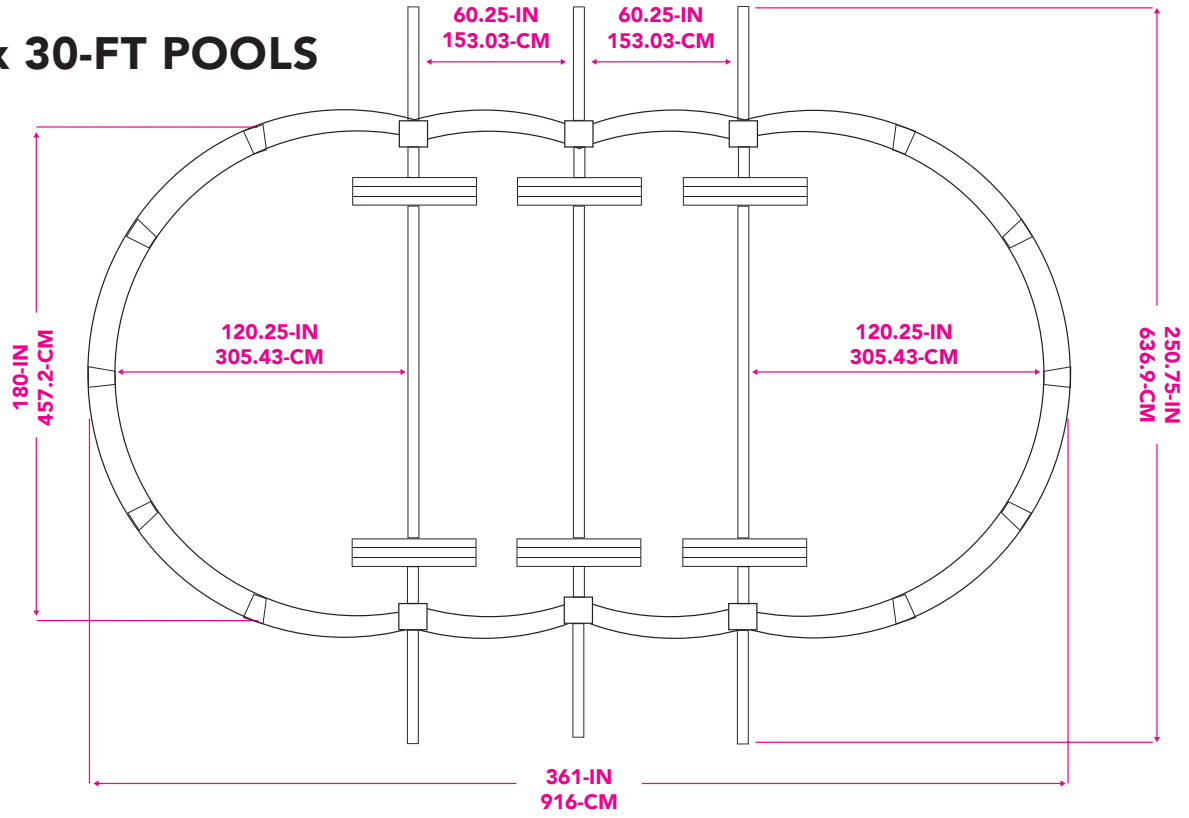

18 x 33-FT POOLS

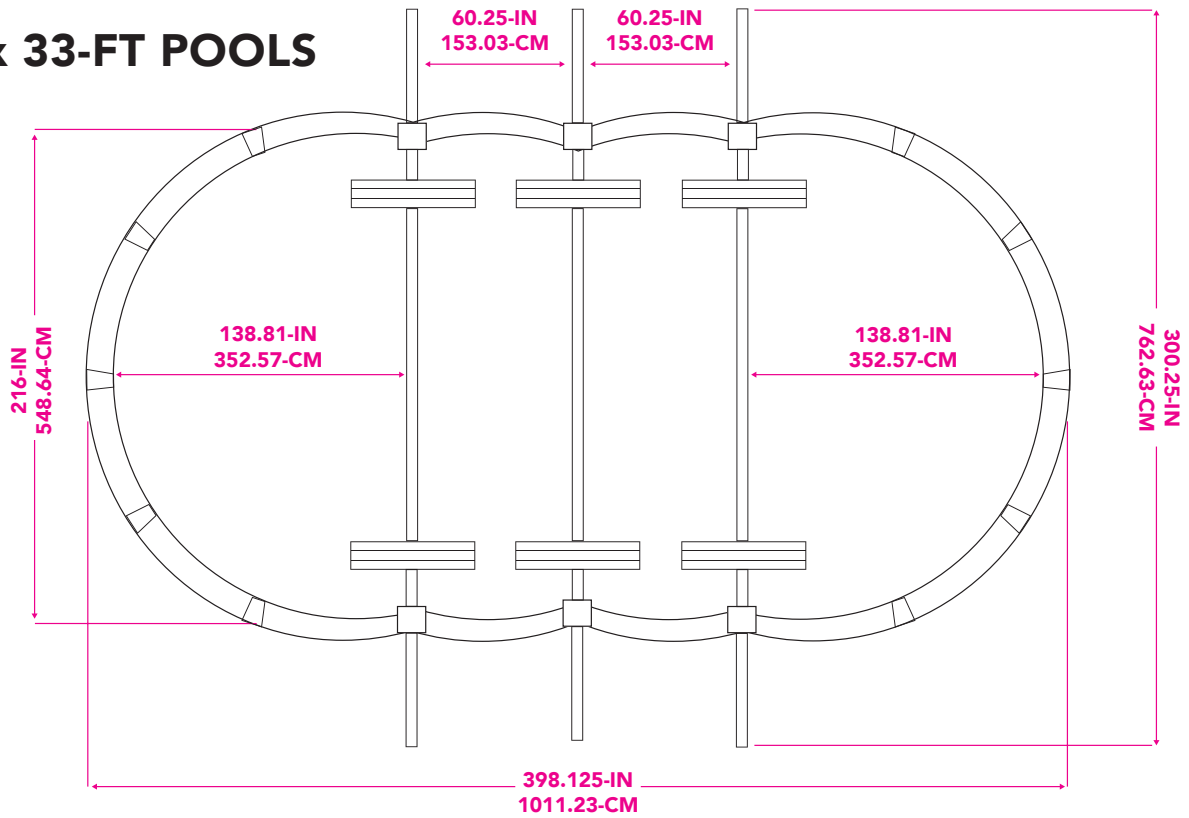

PREPARING THE POOL SITE (CONT.)

5. After the pool area has been marked off, use a shovel to remove all grass and sod from the pool area. Make sure the entire pool area is level, not just to the naked eye, but by using a leveling tool.

6. Remove all high spots in the area, but do not fill in the low spots, as setting may cause your pool to become uneven. The ground below the pool must be firm.

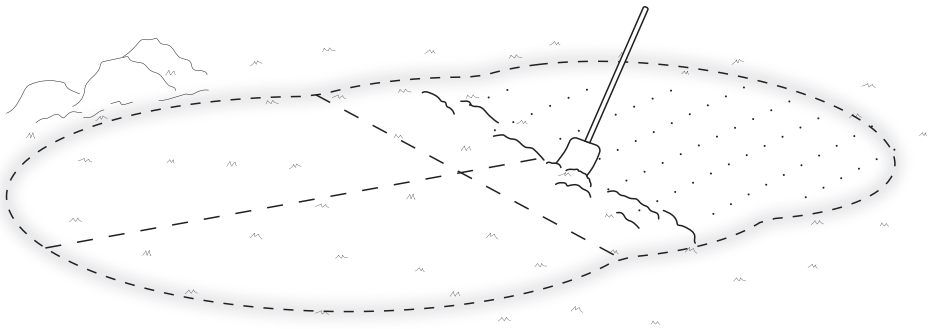

PREPARING THE SIDE SUPPORT TRENCHES

1. Find the center point of the pool and place the assembled middle side verticals in their predetermined location.

2. Place the remaining side verticals equidistant from each other. Refer to the chart on page 10 for exact measurements.

3. After ensuring each side vertical is evenly placed, place three 12x12-IN patio blocks under each side vertical. Mark the space around each patio block and dig out the dirt beneath them, creating a trench for each block to fit securely, but leaving enough space for the horizontal support to be flush with the ground while seated on top of the blocks. Do not over excavate the dirt around the blocks.

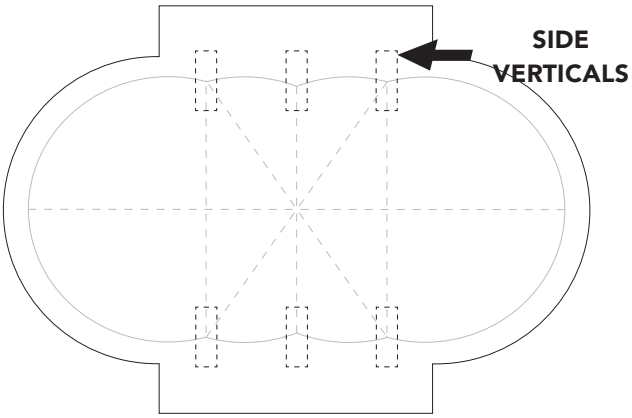

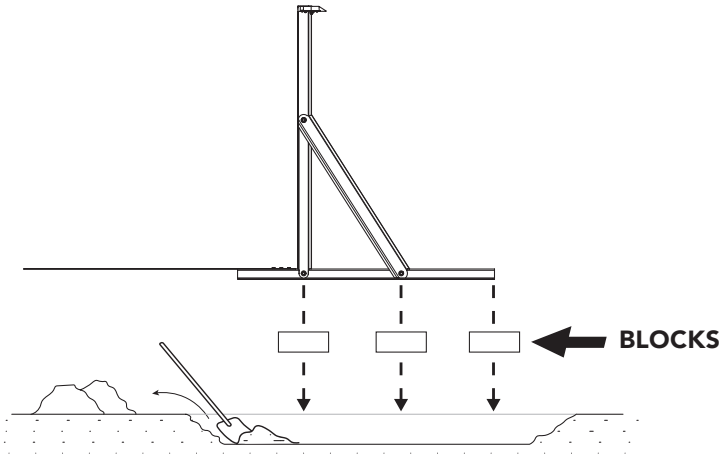

PREPARING THE SIDE SUPPORT TRENCHES (CONT.)

4. After digging out the trenches and ensuring that all side verticals and patio blocks are level in the ground, fill in the remaining space around the blocks with gravel and pack in tightly around the horizontal support.

5. Repeat for all side verticals.

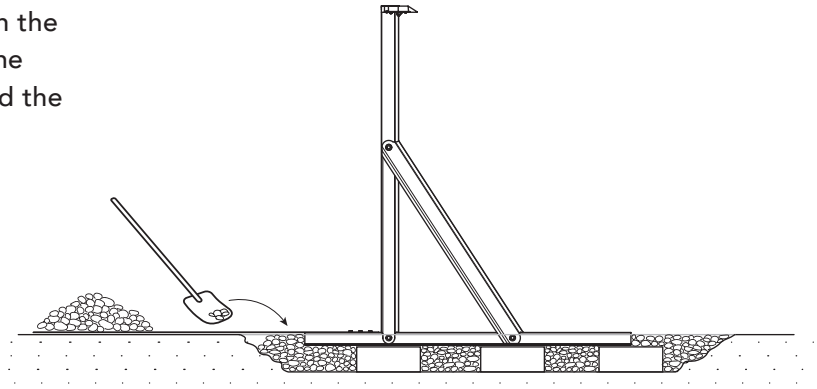

CONNECTING ALL OVAL PARTS

1. When the ground around the side support trenches is level with gravel, attach the pressure plates to the top of the end straps using #12 sheet metal screws (NBP6269). The pressure plates will extend about 1-IN from the side bottom joint towards the center of the pool.

2. Connect the middle strap to the end straps of each side vertical using M8 x 20 Hex Head Bolts and M8 Hex Nuts (NBP1002). The middle strap will run underneath the liner of the pool.

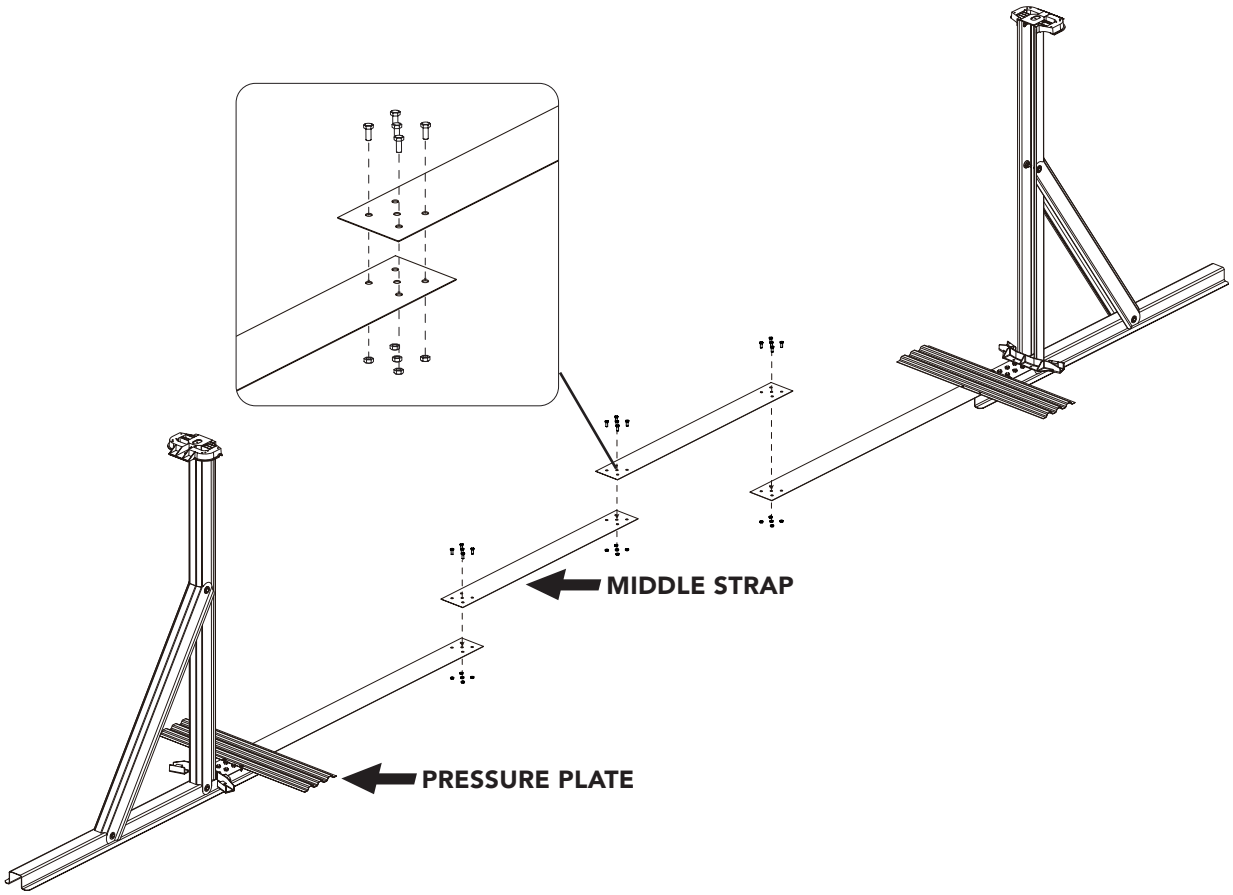

ASSEMBLING THE BOTTOM RAIL

1. Place each curved bottom rail around the circumference of the pool.

2. Place the bottom joints on the marked locations around the pool area. Slide the bottom rail's grooves into the bottom joint to the stop tab.

3. Continue around the entire space until all bottom rails are connected. After the bottom rails are installed, check for levelness from the center nail around the entire area, the distance should be the same from every point.

4. After ensuring the bottom joints are even and level, place 12x12-IN patio blocks under each bottom joint. The top of the blocks must be flush with the ground and centered under each end joint. Mark the space around each patio block and dig out the dirt beneath them, creating an indentation for each block to fit securely. Check that each block is level.

5. Check that all bottom rails are level around the entire pool frame. Remove any debris from the bottom rails.

6. Remove one bottom rail from the frame. Use this space to bring in the mason sand or sifted earth. Add a 1 to 2-IN layer of sand and spread it evenly using a rake. When the layer of sand is level, remove the wheelbarrow and replace the bottom rail.

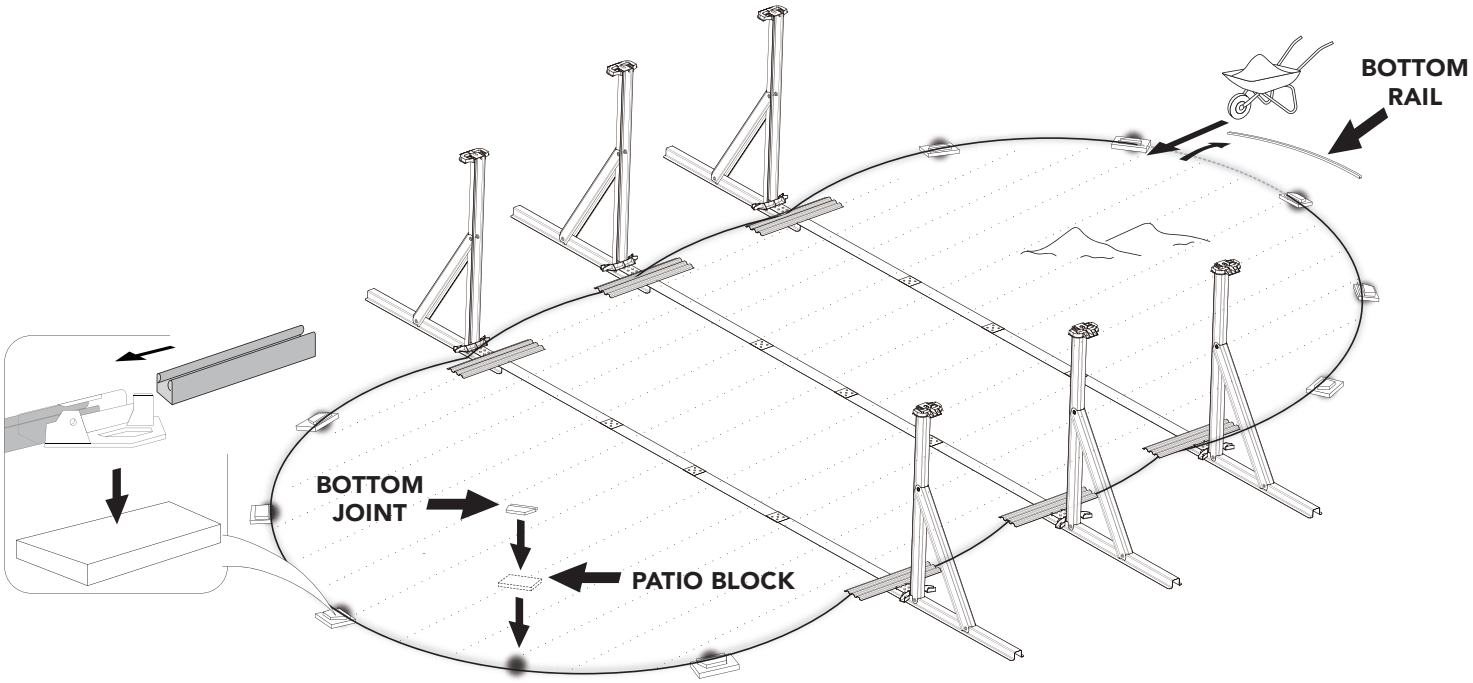

ASSEMBLING THE POOL WALL

1. Place the rolled up pool wall in the center of the pool area. It is recommended to use a piece of plywood under the pool wall as to not disturb the level sand.

2. With one person on the outside of the pool and one person on the inside, start unrolling the pool wall going clockwise. Place the start of the wall in the center of one of the end caps closest to where the skimmer and return will be placed.

3. Unroll the wall a little at a time, placing it into the track of the bottom rail as you go. Do not unroll the wall at one time, this will make installation more difficult.

4. While unrolling the wall, place the top rail on top of the wall to temporarily stabilize it.

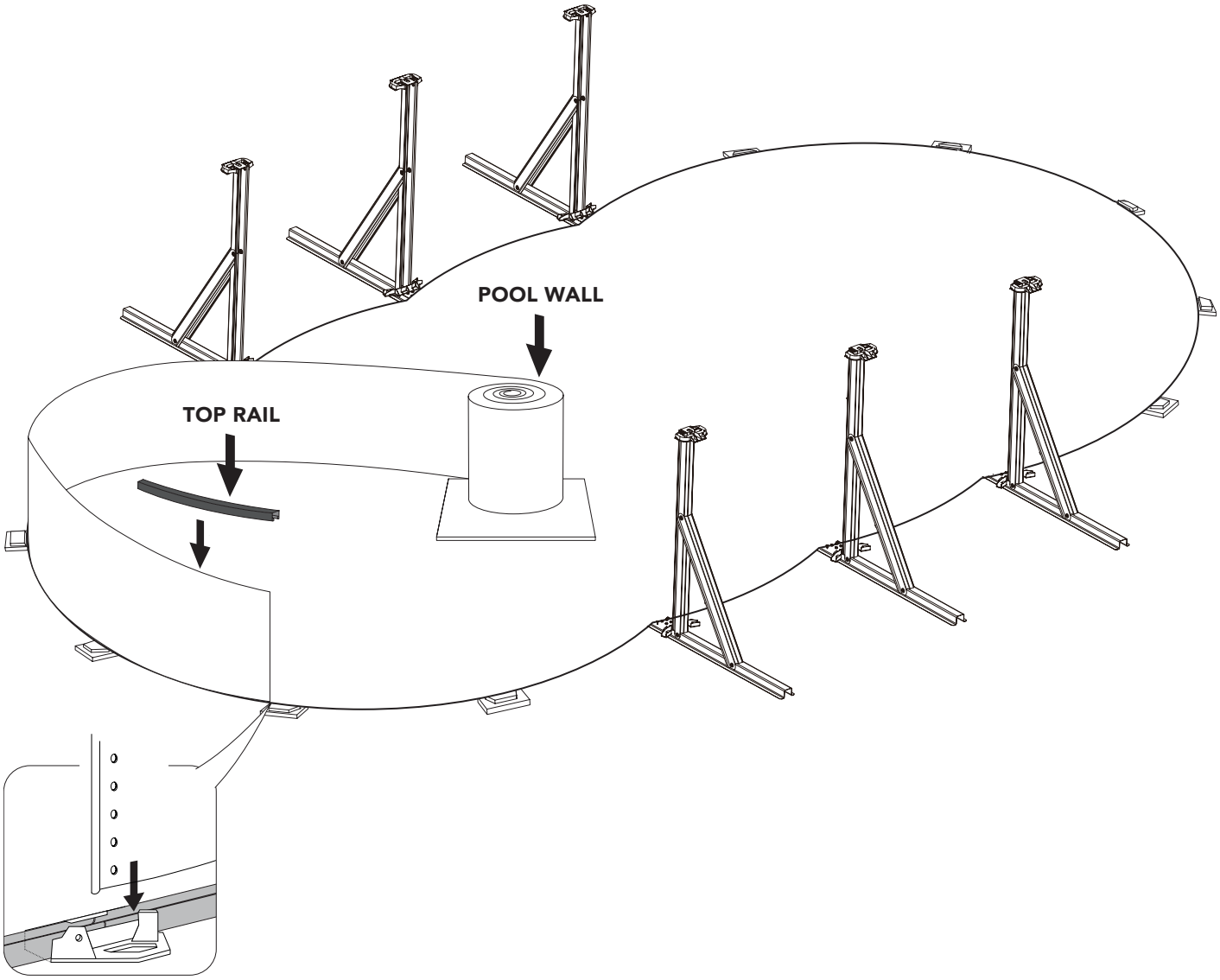

ASSEMBLING THE POOL WALL (CONT.)

5. Bring the two ends of the wall together. Secure the walls together by inserting the bolts (NBP1021) from the INSIDE of the pool outward. Fasten the bolts from hole to hole all the way down the wall. Do not leave any holes open.

6. When each screw has been fastened, use a strip of duct tape to cover the inside and outside of the bolts.

7. Check the levelness of the top of the wall. If it's more than 2-IN off level, rework the ground.

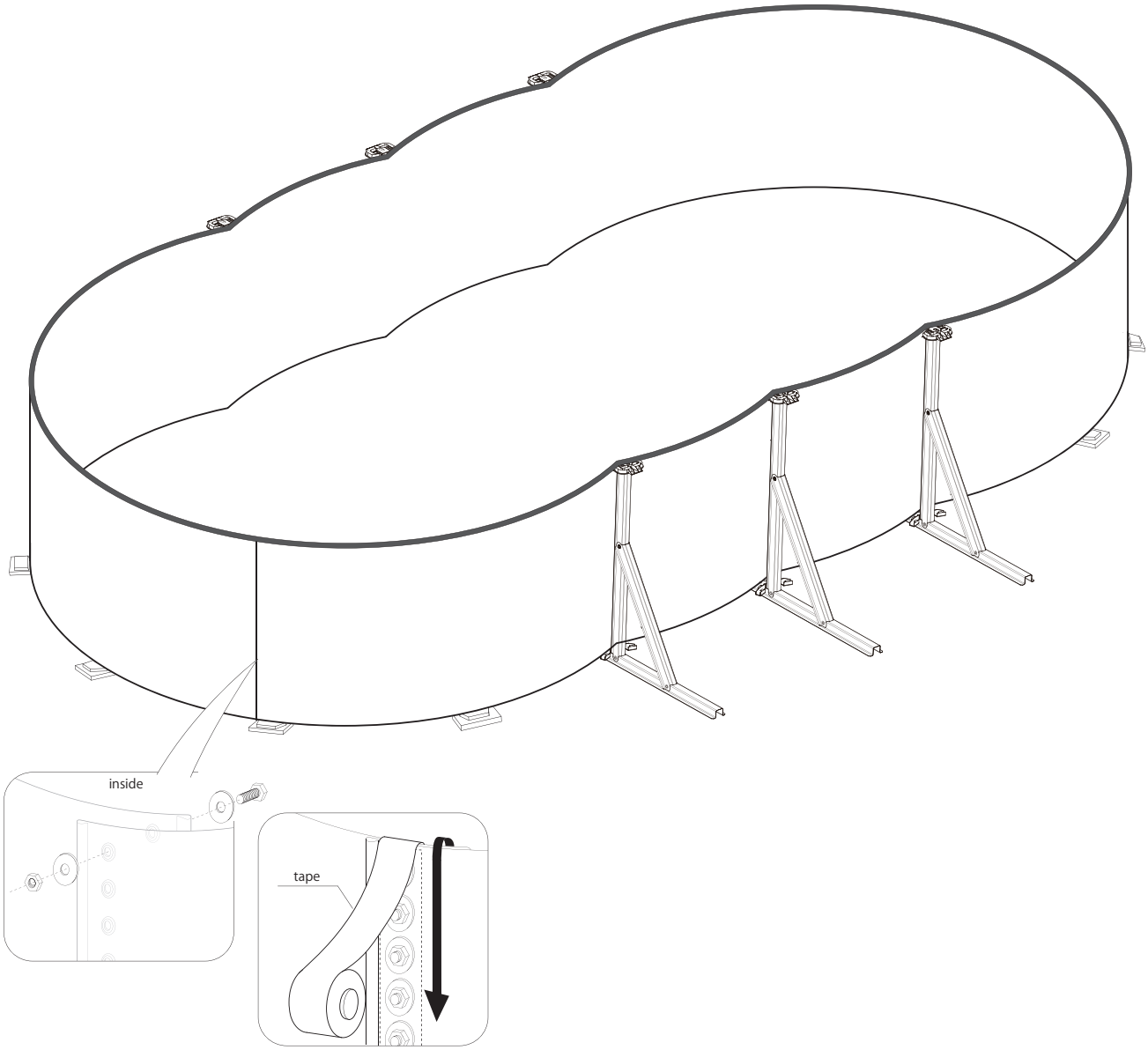

NOTE

Do not fasten the wall without using the reinforcing washers on the inside and outside of the pool. Failure to use reinforcing washers as instructed will cause the wall to split when the pool is filled. This can cause property damage or bodily harm.

BLUE WAVE® WALL FOAM

It is recommended to use wall foam around the interior of the pool to protect the pool liner. Wall foam protects between the pool wall and liner. It also helps to keep the pool insulated. Wall foam and spray adhesive sold separately. See the chart on page 14 for the amount of rolls needed for your pool size.

1. Use the spray adhesive in small sections and press the foam onto the wall. Smooth out any creases and bubbles before installing the liner.

GORILLA PAD®

Gorilla Pad® are another recommended part of the pool assembly. Gorilla Pad® provide cushion to the pool floor and adds mild protection for the liner. Use the chart on page 14 to find the correct size for your pool.

1. Before installing the Gorilla Pad®, be sure to use a roller or tamping tool to even out the sand floor.

2. Unfold the Gorilla Pad® over the leveled sand floor and center it in the pool area.

BLUE WAVE® POOL COVE

Creating the pool cove is an essential part of pool installation and must be done properly. Pool coves relieve water pressure from the pool wall, preventing damage done to the liner by pushing it out from under the bottom rail. There are two different types of pool coves, earth mounds and permanent coves. Earth mounds are good for soil or sand that will pack well and are best for areas that don't experience a lot of rainfall. Permanent pool coves, or foam pool coves, are easy to install and won't erode over time from rainfall.

BUILDING A POOL COVE

1. Use a rake or tamping tool to create a mound around the interior of the pool wall. This mound must be 3 to 6-IN high and should extend 8 to 12-IN away from the wall. Pack the sand gently but firmly.

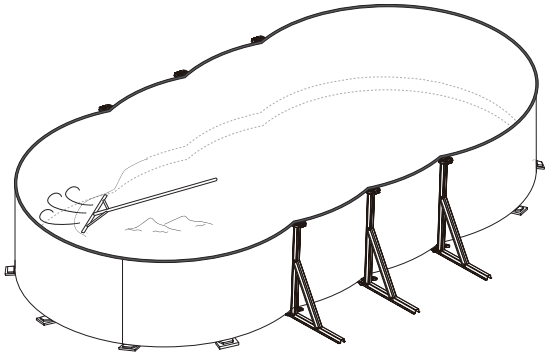

USING BLUE WAVE® PERMANENT COVES

1. Foam pool coves are designed to sit on the bottom rail of the pool. Peel the plastic off of the back of the cove and press firmly into place. Continue around the entire perimeter of the pool.

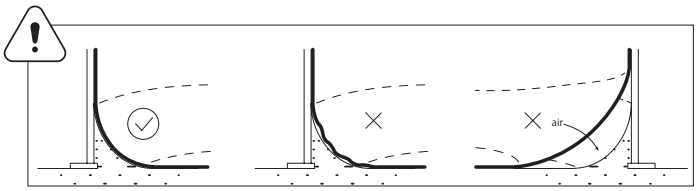

INSTALLING THE LINER

If you did not install a floor pad, be sure to use a roller or tamping tool to even out the sand floor. Remove your shoes before installing the liner. Do not forcefully pull on or drag the liner.

1. Carefully open the carton holding the liner by removing the tape, do not cut open the carton.

2. Unfold the liner inside of the metal wall. Carefully spread it out on the ground with the bottom seam of the liner on the pool cove.

3. Remove the temporarily placed top rails. Drape the edge of the liner over the top of the wall and create a collar approximately 3-IN down the outside of the wall.

4. Place the plastic coping strips (NBP1019) over the liner and slide them into to place inside of the groove of the top joint. Replace the top rails over the plastic coping strips and fasten to the top joint.

5. When the liner is in place, gently push any wrinkles to the pool cove. Be sure to not leave a gap between the liner and the cove.

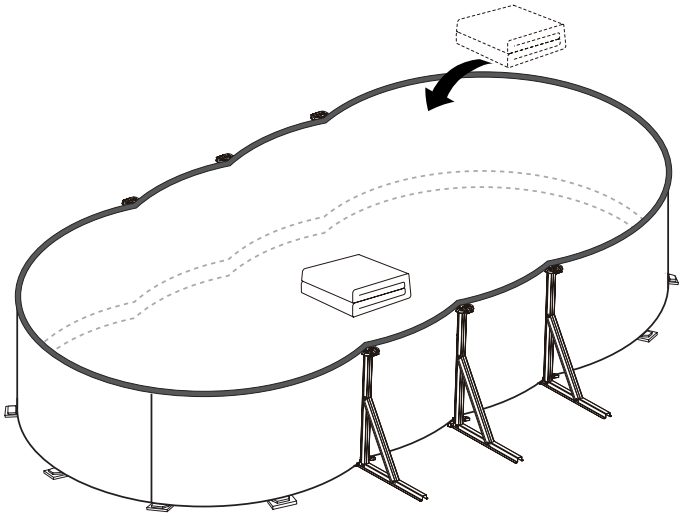

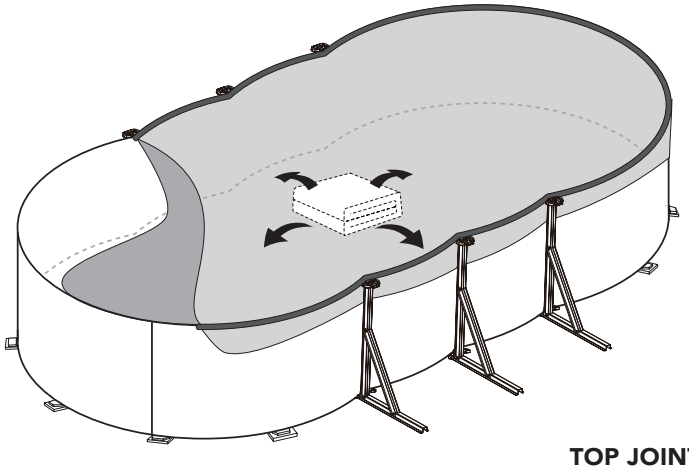

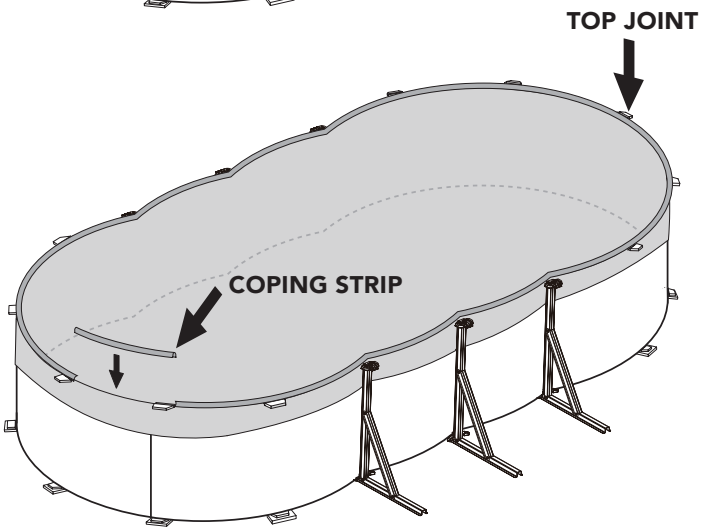

INSTALLING THE VERTICALS

1. Before installing the vertical onto the pool, attach the seat cover bracket (NBP1030) to the vertical. To fasten the seat cover bracket to the vertical, thread a sheet metal screw (NBP1203) from the back of the vertical outward and into the bracket.

2. Place the vertical over the tabs of the bottom joint and securely fasten them into place with sheet metal screws (NBP1203). Repeat this step for the top joints.

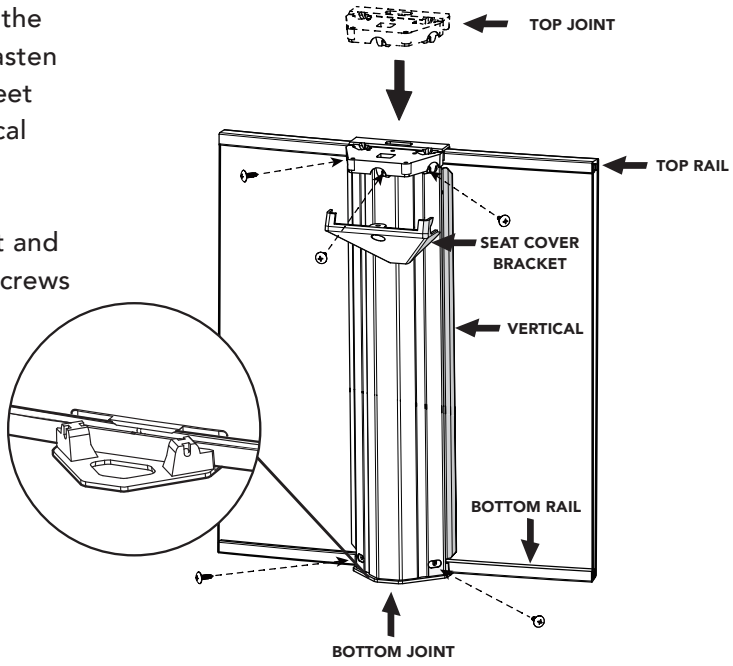

INSTALLING THE TOP SEATS (OUTER PERIMETER)

1. Place the steel top seats over the top joints and secure into place with sheet metal screws (NBP1203).

2. Once all top seats are installed around the pool, connect the seat covers to the top joint and to the bracket using sheet metal screws (NBP1203). When the seat cover is attached to the vertical, place a seat cover cap (NBP1076) over the sheet metal screw.

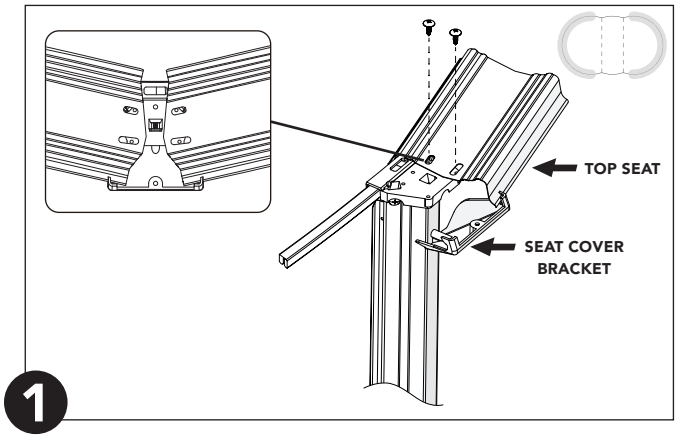

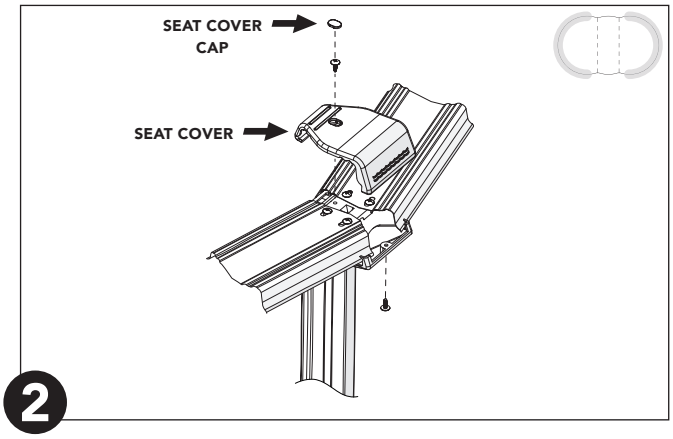

INSTALLING THE TOP SEATS (SIDE VERTICALS)

1. Place the steel top seats over the side top joints and secure into place with sheet metal screws (NBP1203).

2. Once all top seats are installed around the pool, connect the side seat covers to the top joint. Connect the outside seat covers to the top joint with sheet metal screws (NBP1203) and securely fasten into place. When the side seat covers are secured, place the caps (NBP1073) on top of the center sheet metal screws.

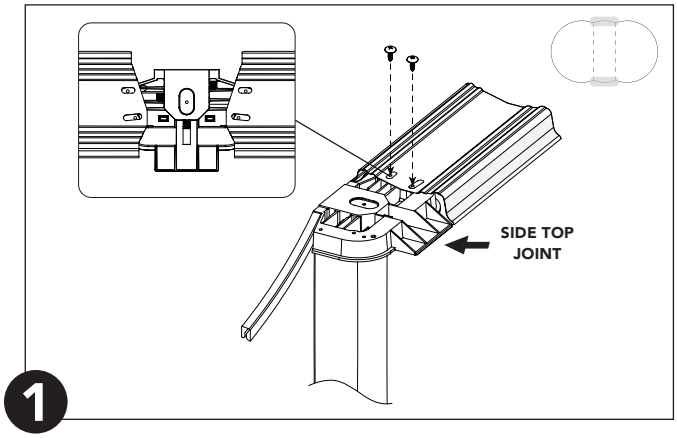

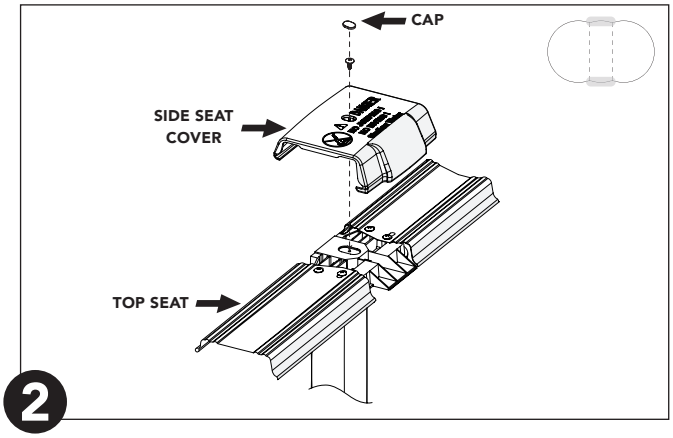

HELPFUL INFORMATION

BLUE WAVE® WALL FOAM AND SPRAY ADHESIVE

SKU	DESCRIPTION	SIZE
NL1970	Blue Wave Above-Ground Closed Cell Wall Foam	60-FT
NL1971	Blue Wave Above-Ground Closed Cell Wall Foam	75-FT
NL1972	Blue Wave Above-Ground Closed Cell Wall Foam	85-FT
NL1973	Blue Wave Above-Ground Closed Cell Wall Foam	100-FT
NL106	Spray Adhesive for Pool Wall Foam	17-OZ

GORILLA PAD® POOL FLOOR LINER PROTECTIVE PADDING

SKU	DESCRIPTION	SIZE
NL1475	Oval Gorilla Pad® Pool Floor Protective Padding	10 X 19-FT
NL1318	Oval Gorilla Pad® Pool Floor Protective Padding	12 X 20-FT
NL130	Oval Gorilla Pad® Pool Floor Protective Padding	12 X 24-FT
NL135	Oval Gorilla Pad® Pool Floor Protective Padding	15 X 26-FT
NL132	Oval Gorilla Pad® Pool Floor Protective Padding	15 X 30-FT
NL1325	Oval Gorilla Pad® Pool Floor Protective Padding	16 X 24-FT
NL133	Oval Gorilla Pad® Pool Floor Protective Padding	16 X 32-FT
NL134	Oval Gorilla Pad® Pool Floor Protective Padding	18 X 33-FT
NL136	Oval Gorilla Pad® Pool Floor Protective Padding	18 X 40-FT
NL138	Oval Gorilla Pad® Pool Floor Protective Padding	21 X 41-FT
NL139	Oval Gorilla Pad® Pool Floor Protective Padding	21 X 43-FT

BLUE WAVE® PEEL AND STICK FOAM POOL COVES

SKU	DESCRIPTION	QUANTITY
NL102	48-in Peel and Stick Above Ground Pool Cove	1
NL102-10	48-in Peel and Stick Above Ground Pool Cove	10
NL102-12	48-in Peel and Stick Above Ground Pool Cove	12
NL102-26	48-in Peel and Stick Above Ground Pool Cove	13
NL102-28	48-in Peel and Stick Above Ground Pool Cove	14
NL102-14	48-in Peel and Stick Above Ground Pool Cove	15
NL102-30	48-in Peel and Stick Above Ground Pool Cove	16
NL102-16	48-in Peel and Stick Above Ground Pool Cove	17
NL102-32	48-in Peel and Stick Above Ground Pool Cove	18
NL102-18	48-in Peel and Stick Above Ground Pool Cove	19
NL102-34	48-in Peel and Stick Above Ground Pool Cove	21
NL102-20	48-in Peel and Stick Above Ground Pool Cove	22
NL102-22	48-in Peel and Stick Above Ground Pool Cove	24
NL102-24	48-in Peel and Stick Above Ground Pool Cove	26
NL102-36	48-in Peel and Stick Above Ground Pool Cove	27

15-YEAR LIMITED WARRANTY

This product is warranted to the original purchaser to be free from defects in material or workmanship for a period of fifteen (15) years from the date of the original retail purchase.

This warranty does not cover defects or damage due to improper installation, alteration, accident, or any other event beyond the control of the manufacturer. Defects or damage resulting from misuse, abuse, or negligence will void this warranty. This warranty does not cover scratching or damage that may result from normal usage.

This product is not intended for institutional or commercial use; the manufacturer does not assume any liability for such use. Institutional or commercial use will void this warranty.

This warranty is nontransferable and is expressly limited to the repair or replacement of the defective product. During the warranty period, the manufacturer shall repair or replace defective parts at no cost to the purchaser. Shipping charges and insurance are not covered and are the responsibility of the purchaser. Labor charges and related expenses for removal, installation, or replacement of the product or components are not covered under this warranty.

The manufacturer reserves the right to make substitutions to warranty claims if parts are unavailable or obsolete.

The manufacturer shall not be liable for loss of use of the product or other consequential or incidental costs, expenses, or damages incurred by the consumer of any other use. The user assumes all risk of injury resulting from the use of this product.

This warranty is expressly in lieu of all other warranties, expressed or implied, including warranties of merchantability or fitness for use to the extent permitted by Federal or state law. Neither the manufacturer nor any of its representatives assumes any other liability in connection with this product.

All warranty claims must be made through the retailer where the product was originally purchased. A purchase receipt or other proof of date of purchase will be required to process all warranty claims. The model number and part numbers found within the assembly instructions will be required when submitting any parts requests or warranty claims.

For further warranty information or inquiries, please call 1-(800) 759-0977.
Or, email warranty@bluewaveproducts.com

Blue Wave Products, Inc.
101 N. Raddant Rd
Batavia, IL 60510

SKU# NE1222

A-FRAME FLIP UP LADDER

INSTRUCTION MANUAL

Questions, problems, missing parts?

Contact Blue Wave Customer Service at 1-800-759-0977, Monday – Friday.
8am – 5pm (CST)

V3: 01/26

TABLE OF CONTENTS

THANK YOU! 3

PARTS LIST 4

ASSEMBLING THE FLIP-UP LADDER 6

ASSEMBLING THE IN-POOL LADDER 9

ANTI-ENTRAPMENT BARRIER ASSEMBLY 11

MODIFYING THE LADDER HEIGHT 12

ADDING WEIGHT TO THE LADDER 12

ATTACHING THE PLATFORM AND HANDRAILS 13

POSITIONING AND SECURING THE LADDER 14

WINTERIZING 14

WARRANTY 15

THANK YOU!

Thank you for purchasing this product. We work around the clock and around the globe to ensure that our products maintain the highest possible quality. However, in the rare case of issues during assembly or use of this product, please contact **Blue Wave Customer Service at 1-800-759-0977** for immediate assistance before contacting your retailer. Please read the warranty information at the back of these assembly instructions for further details.

⚠ WARNING

To prevent potential injury, please read this entire manual before attempting to assemble, operate, or install the product.

- Read these instructions carefully.
- Do not use the ladder for any other purpose - it is only for use with an above-ground pool.
- Maximum authorized weight: 225 lbs (102 kg)
- Check the condition of the ladder components before assembly and before each use.
- If winterizing the pool is required, the ladder must be removed, cleaned, and dried.
- Failure to comply with maintenance rules may pose a serious risk to health.
- Only one person at a time should climb up the ladder.
- Do not sit on, dive, or jump from the ladder.
- Do not bounce or jump on the ladder.
- Do not allow children to use the ladder unless under close competent supervision.
- Place the ladder on solid, level ground.
- Use with saltwater voids the warranty.
- The installation must comply with the codes of the authority having jurisdiction and may require permits for building, plumbing electrical, zoning, etc.
- This ladder is designed and manufactured for a specific pool wall height and/or deck of the pool.
- When the pool is not occupied, swing-up and secure, liftoff, or slide-up and secure.
- Apply 6 of the 12 warning labels to each of the left and right handrails so 6 are facing the outside and 6 are facing the pool.

SAVE THIS INSTRUCTION MANUAL

Use of unauthorized replacement parts voids the warranty.

ATTENTION INSTALLER! THIS MANUAL CONTAINS IMPORTANT INFORMATION ABOUT THE INSTALLATION, OPERATION, AND SAFE USE OF THESE STEPS AND MUST BE FURNISHED TO THE END USER OF THIS PRODUCT. FAILURE TO READ AND FOLLOW ALL INSTRUCTIONS COULD RESULT IN SERIOUS INJURY.

PARTS LIST (NOT TO SCALE)

NE1222

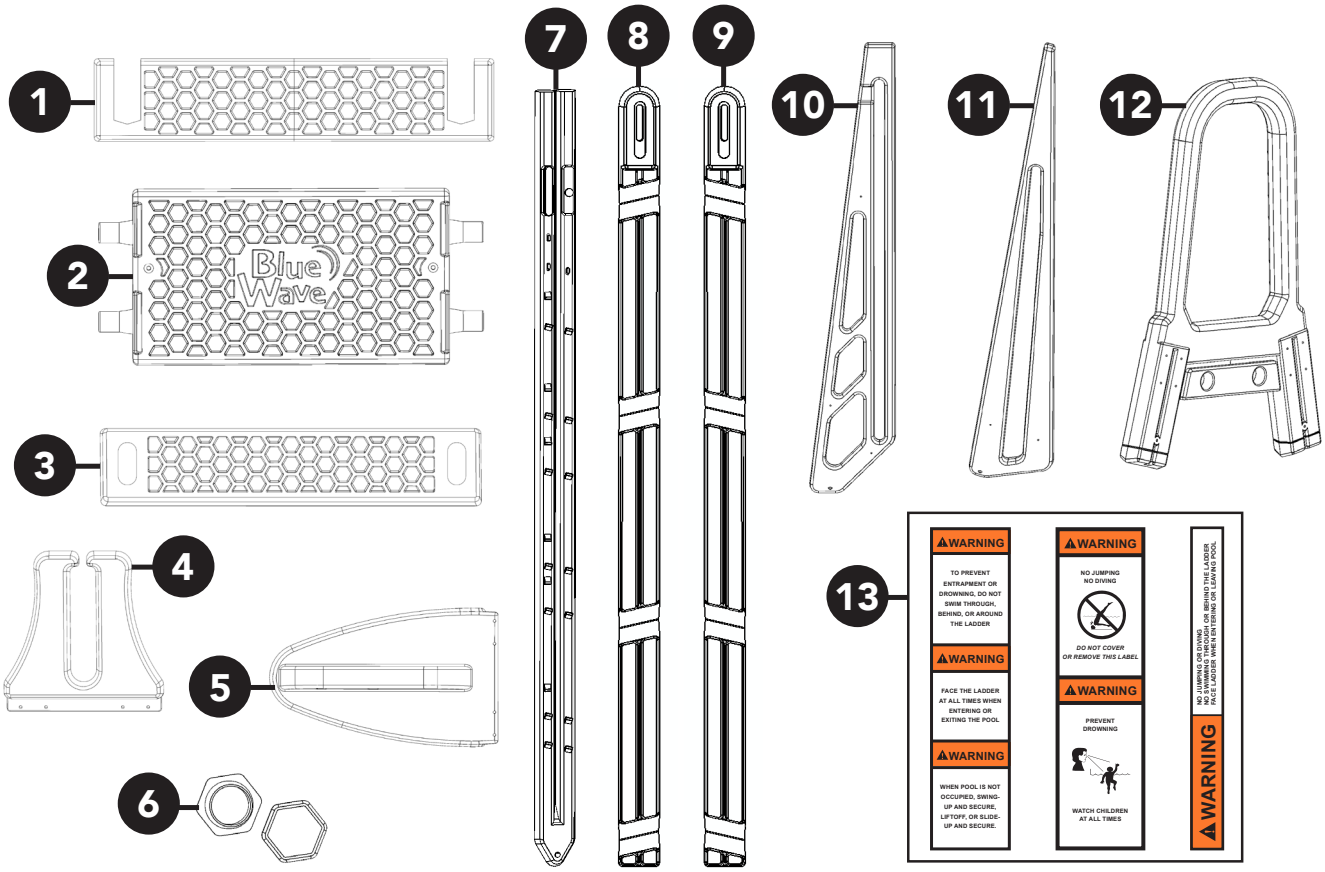

#	PART #	DESCRIPTION	QTY.
1	NEP3028	Step	8
2	NEP3025	Platform	1
3	NEP3020	Bottom Step	2
4	NEP3174	Upper Brace	1
5	NEP3175	Lower Base	1
6	NEP3014	Locking Cap	4
7	NEP3023	Leg (two with pre-drilled holes, two without)	4
8	NEP3022	Left Step Connector	1
9	NEP3026	Right Step Connector	1
10	NEP3172	Large Barrier (four openings)	1
11	NEP3173	Small Barrier (one opening)	1
12	NEP3171	Handrail Assembly	2
13	-	Warning Labels*	12
-	NEP3176	Hardware (thirteen 1-1/2″ screws, thirty-six 1″ screws, two 3-1/2″ screws, two nuts, two washers)	1

*Apply 6 of the 12 warning labels to each of the left and right handrails so 6 are facing the outside and 6 are facing the pool.

ADDITIONAL EQUIPMENT REQUIRED:

Phillips head screwdriver, hacksaw, funnel, 50-lbs (one 1/2 Cu. Ft. bag) of pea gravel, lubricant, rubber mallet with a small block of wood, a fine tip marker, and mounting kits

PARTS LIST (CONT.)

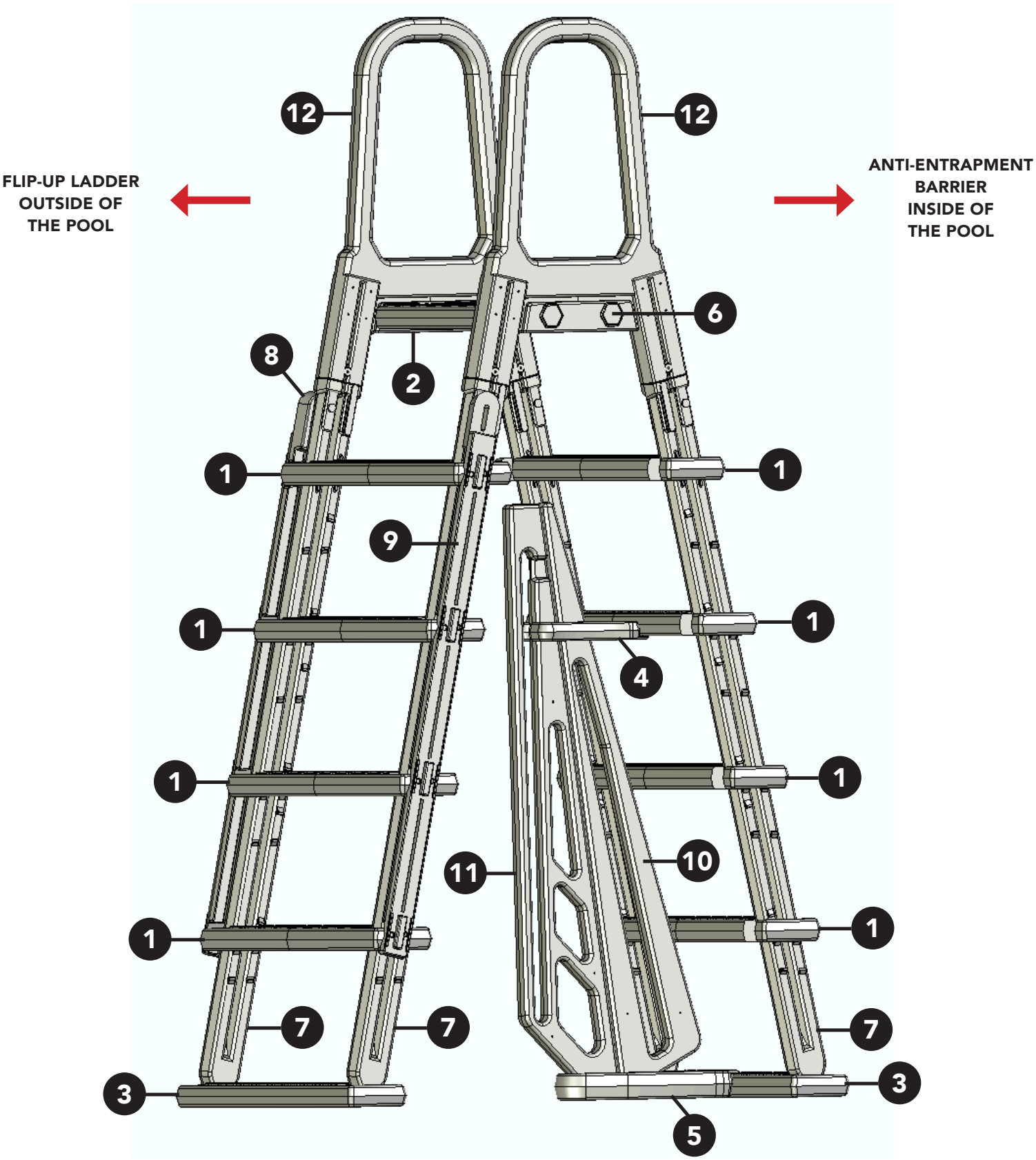

ASSEMBLING THE FLIP-UP LADDER

1. Identify the set of legs with the pre-drilled holes. To ensure the correct placement of the legs, the protruding round handrail stop will be facing AWAY from the pool wall, while the elongated protruding handrail stop will be facing the pool wall.

STEP 1

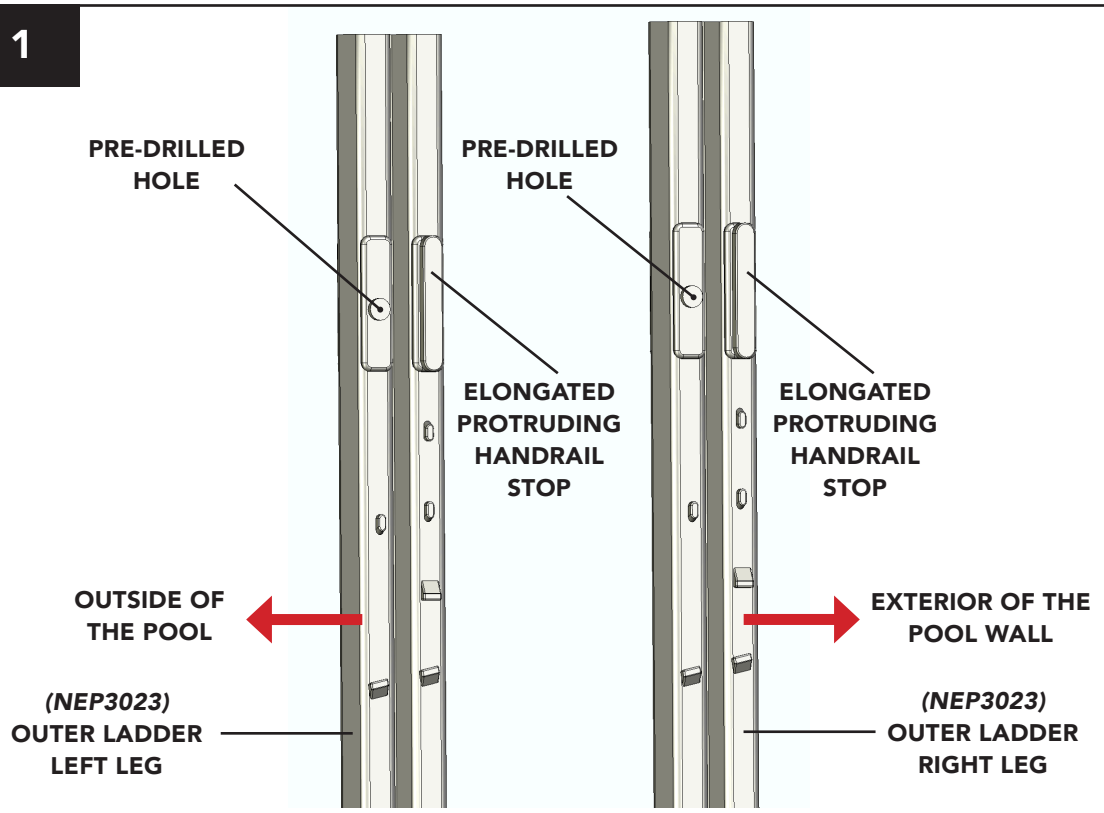

2. Place the bottom step on a level surface with the treads facing up. Stand each leg upright with the pointed side down. Push each leg into the indentation on the bottom step until they both click into place.

STEP 2

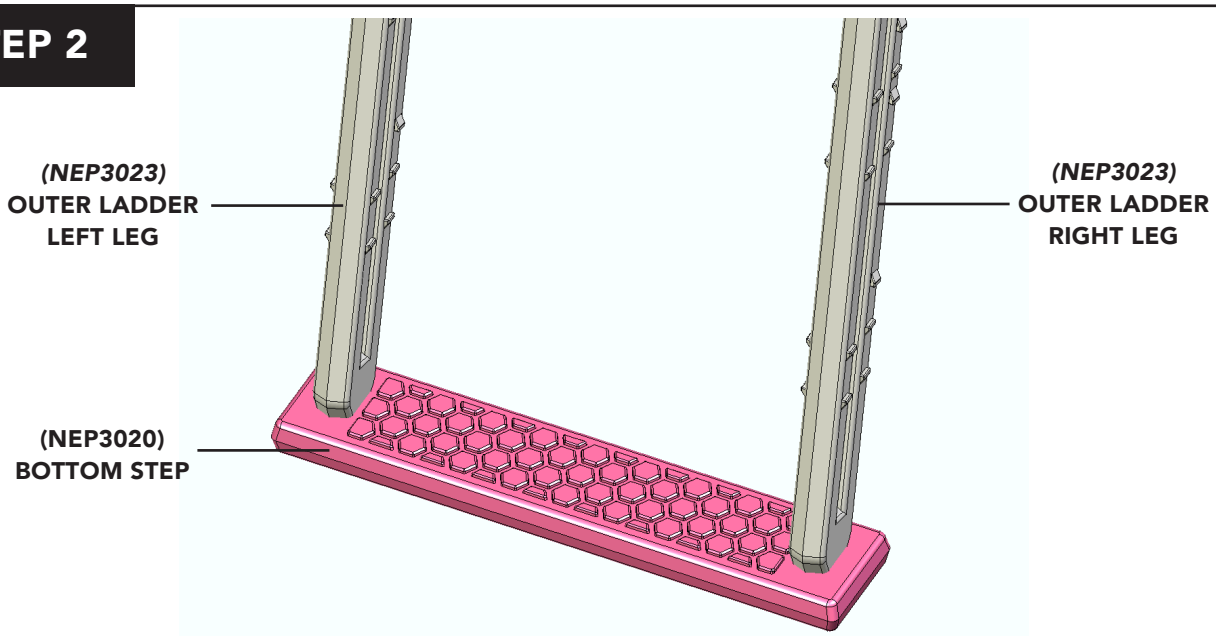

ASSEMBLING THE FLIP-UP LADDER (CONT.)

3. Install the first step to the left and right legs of the ladder frame. Slide the step into the uppermost protruding step supports and attach by screwing one 1-1/2" screw into the right side cutout of the step. Repeat on the left side.

STEP 3

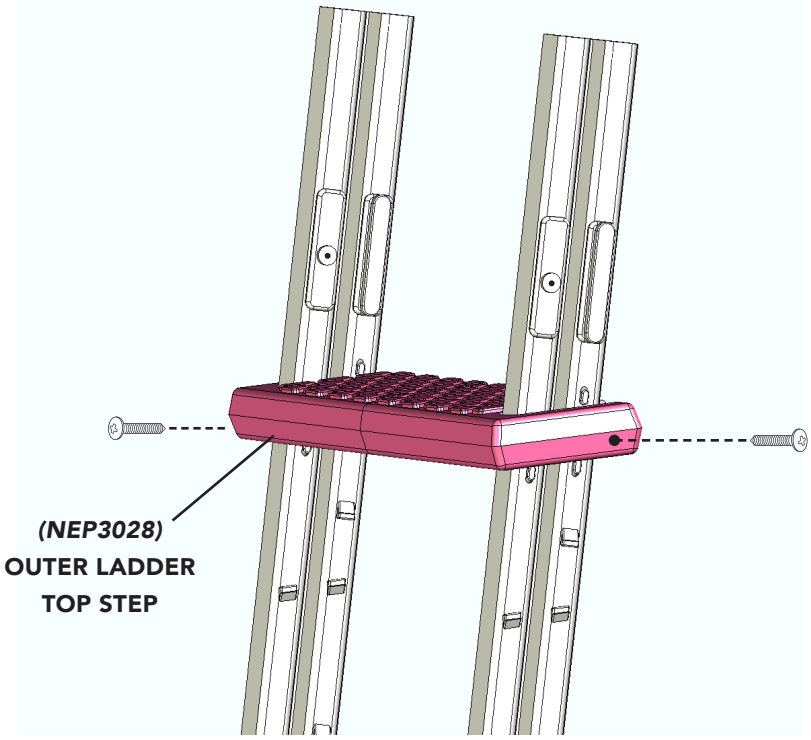

WARNING *Do not over tighten screws to prevent stripping the vinyl.*

4. Lay the outside ladder frame on its left side and slide steps 2, 3, and 4 into the upper protruding step supports.

STEP 4

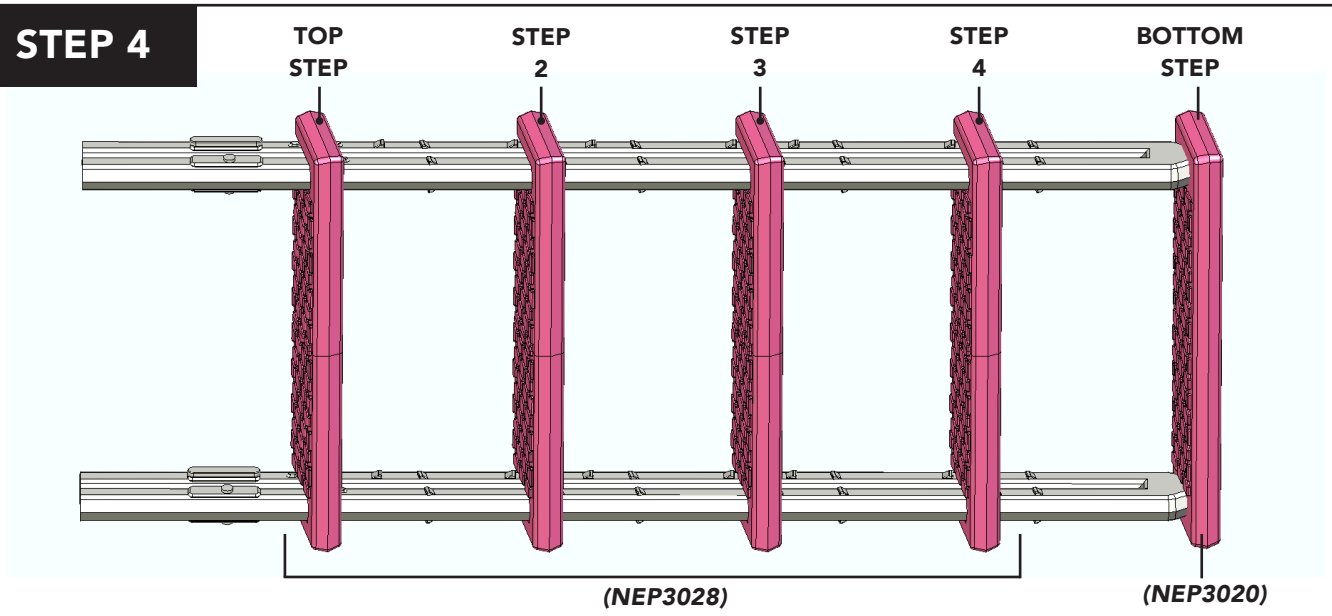

ASSEMBLING THE FLIP-UP LADDER (CONT.)

5. When the steps are positioned, fasten the right step connector to the pre-drilled holes on the steps using two 1" screws per side. Repeat on the left side.

STEP 5

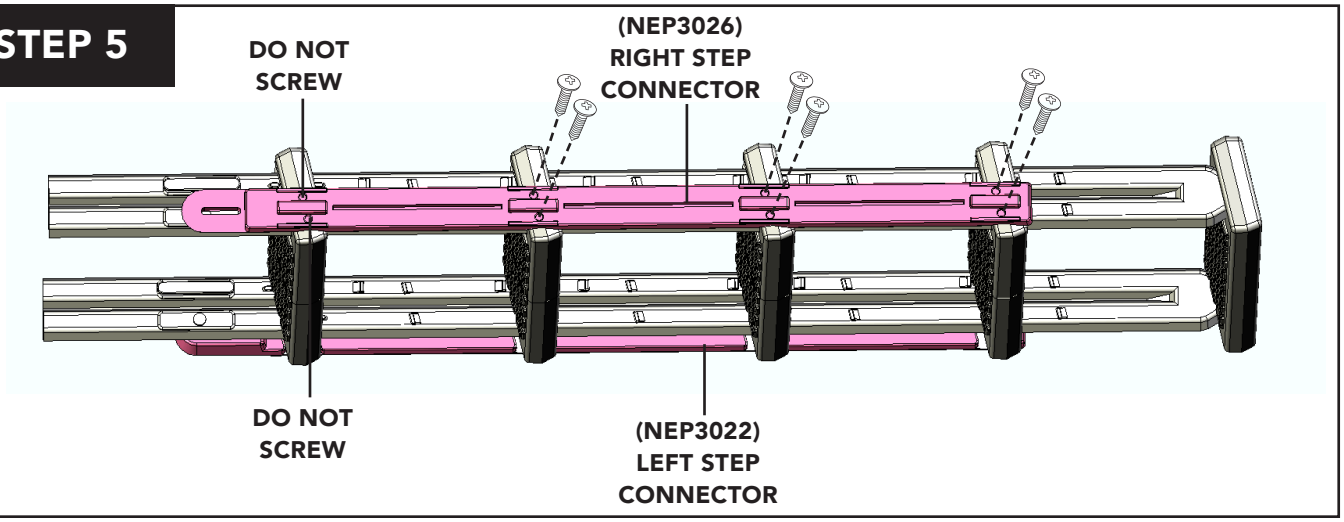

NOTE *Do not screw step connectors to top step since the top step is already attached to the legs in step 3.*

6. Once the step connectors are fastened to the steps, attach the right step connector to the ladder frame by threading the 3-1/2" screw from the inside through the pre-drilled hole. Place the washer and nut on the end of the screw, do not over tighten. Repeat on the left side.

STEP 6

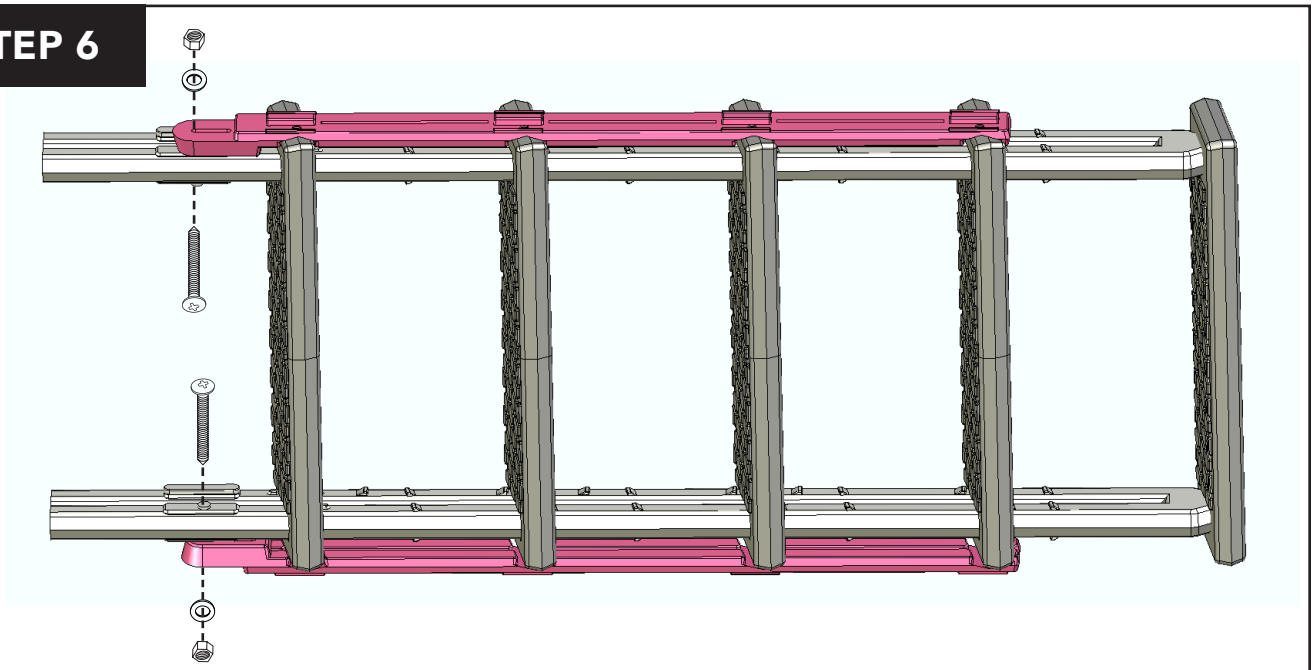

WARNING *Do not over tighten screws to prevent stripping the vinyl.*

ASSEMBLING THE IN-POOL LADDER

7. Identify the set of legs without the pre-drilled holes. To ensure the correct placement of the legs, the protruding round handrail stop will be facing TOWARDS the center of the pool, while the elongated protruding handrail stop will be facing the pool wall.

STEP 7

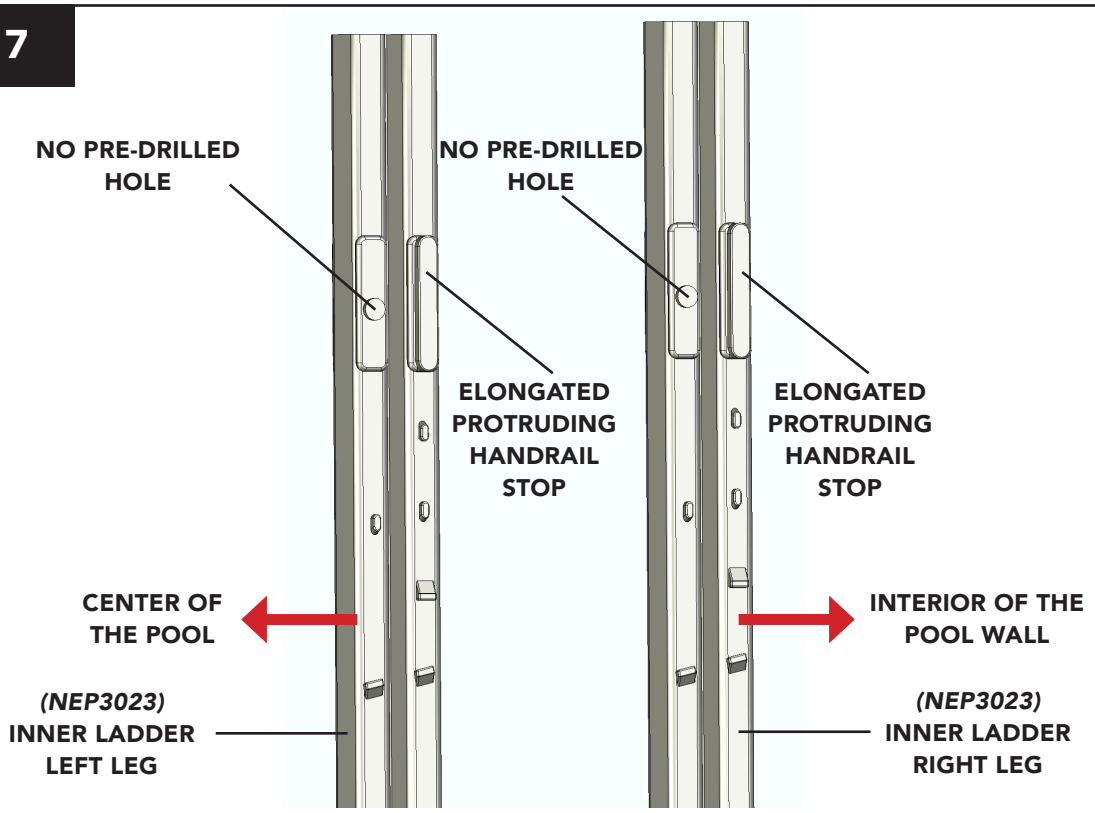

8. Place the bottom step on a level surface with the treads facing up. Stand each leg upright with the pointed side down. Push each leg into the indentation on the bottom step until they both click into place.

STEP 8

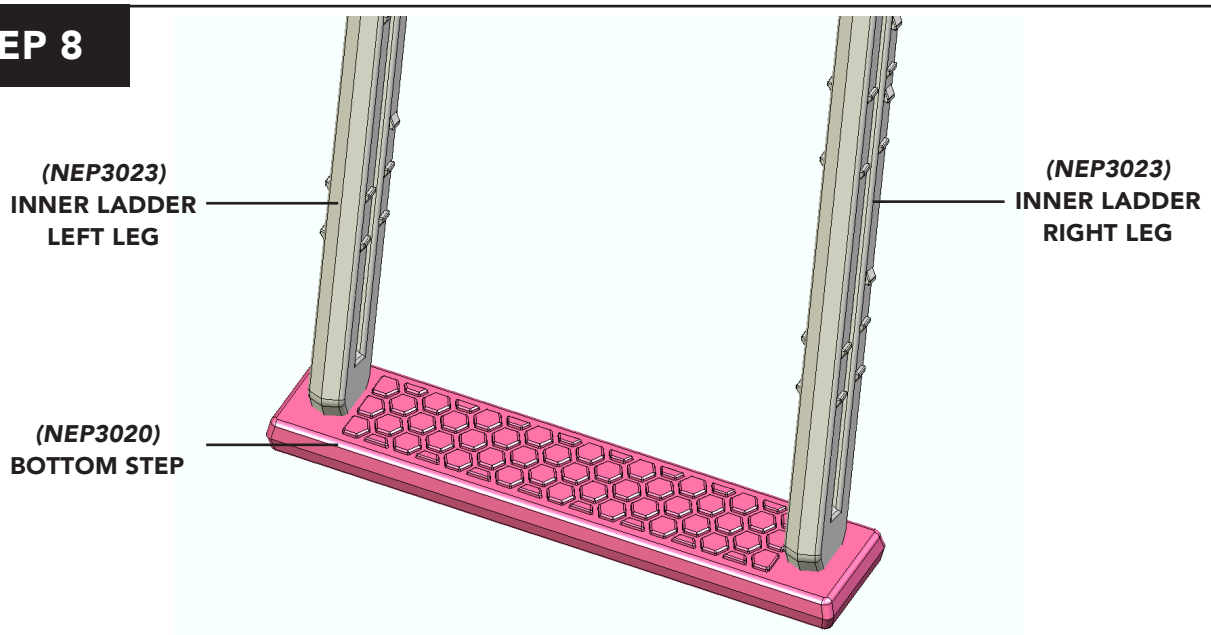

ASSEMBLING THE IN-POOL LADDER (CONT.)

9. Lay the ladder frame on its left side and slide the four steps into the upper protruding step supports.

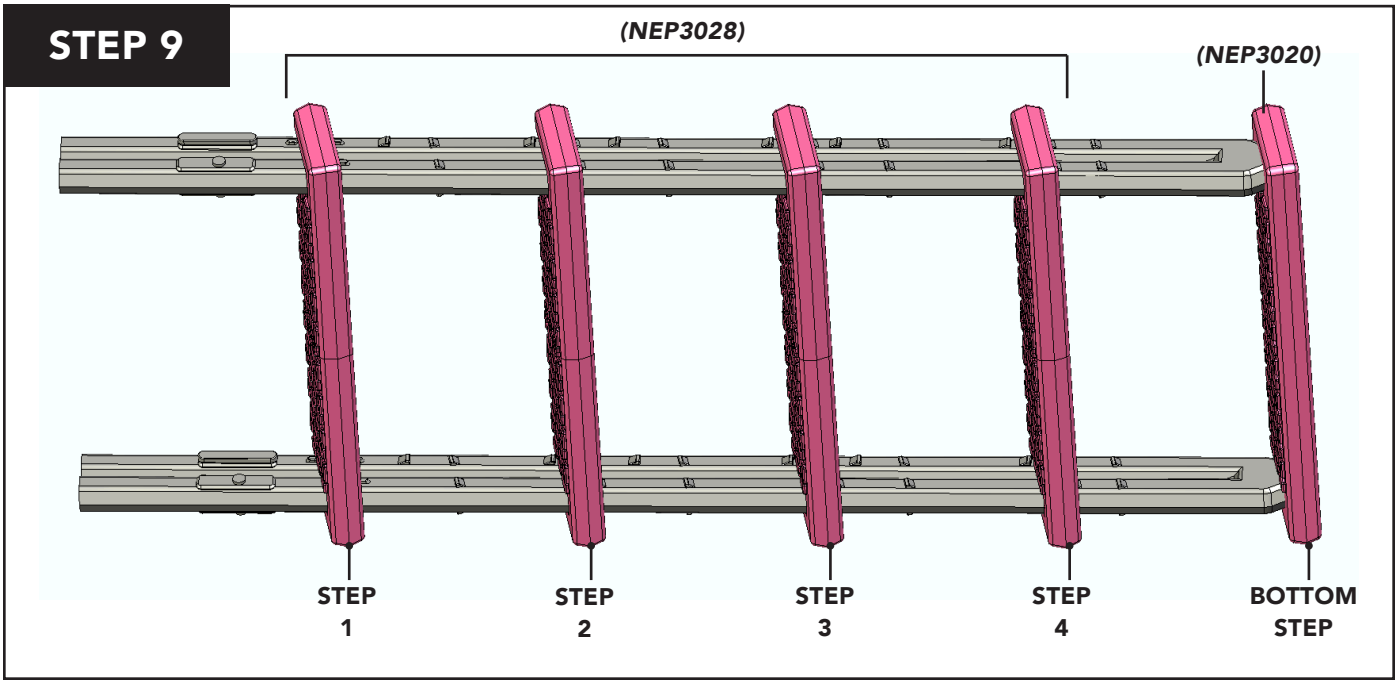

10. Fasten the steps onto the ladder frame by screwing one 1-1/2" screw into the cutout of the steps. Flip the ladder frame over and repeat on the left side.

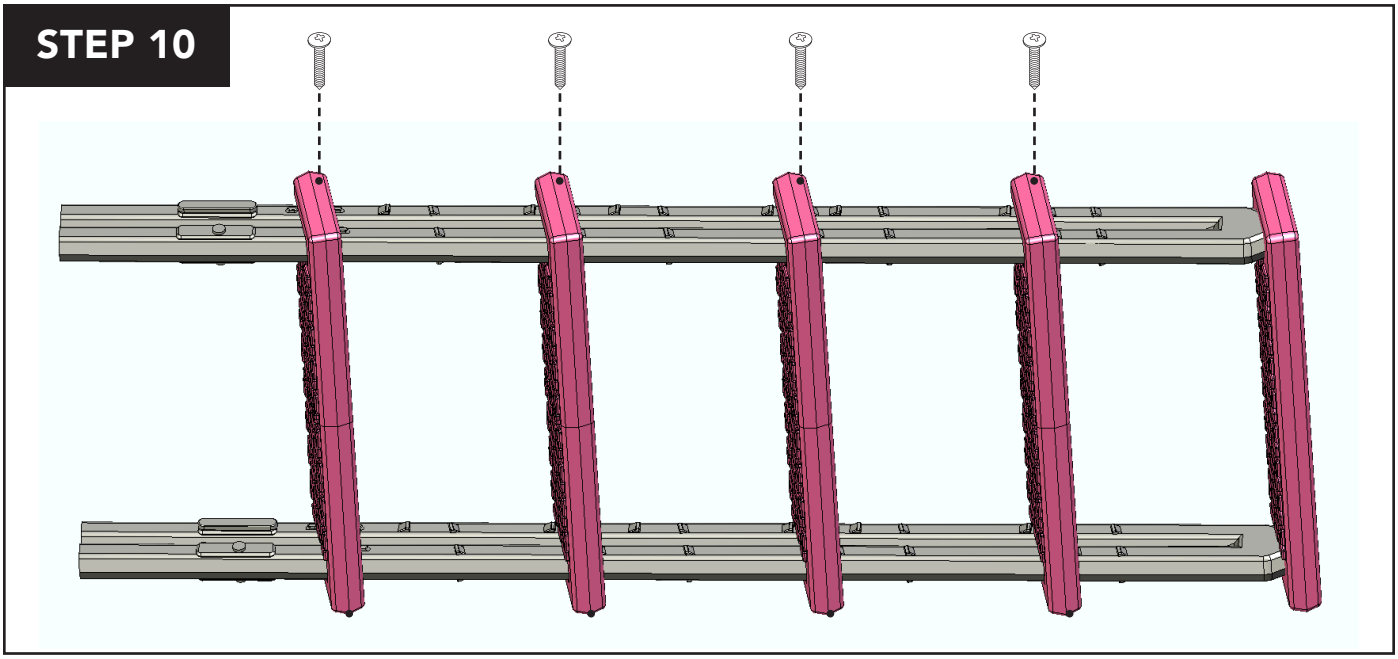

WARNING *Do not over tighten screws to prevent stripping the vinyl.*

ANTI-ENTRAPMENT BARRIER ASSEMBLY

NOTE *This is the side of the ladder without the flip-up steps.*

11. Place the lower base on a level surface. Position the small and large barriers so that the straight sides face each other. The angled side of the large barrier should be facing the rounded edge of the lower base and the angled side of the small barrier should be facing the straight edge of the lower base.

12. Push both barriers into the groove on the lower base until they click into place.

13. Align the notch on the straight edge of the lower base centering it on the inside portion of the bottom step. Attach by screwing four 1″ screws through the base into the step.

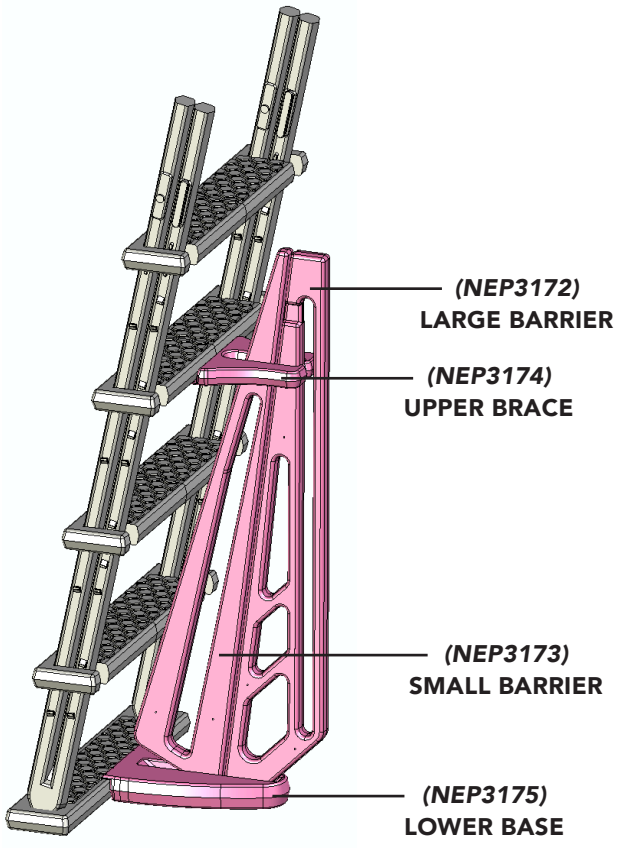

14. Slide the upper brace over the small barrier. Use the groove in the large barrier to allow the brace to slide into the opening of the large barrier. Push the brace down lightly to secure both barriers together.

15. Align the notch on the straight edge of the upper brace centering it on the inside portion of the second step. Attach by screwing four 1″ screws through the brace into the bottom of the step.

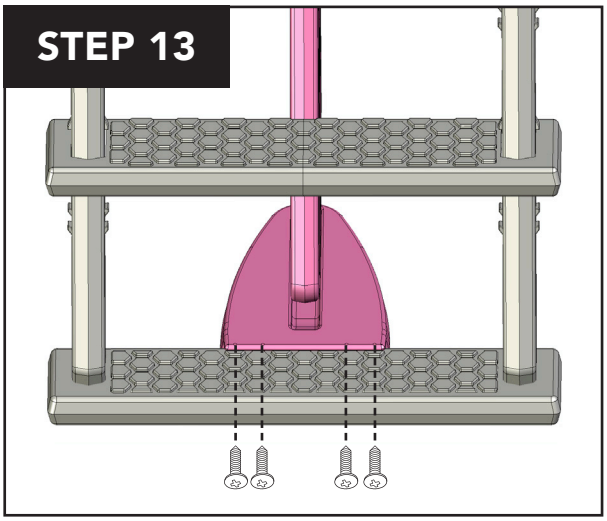

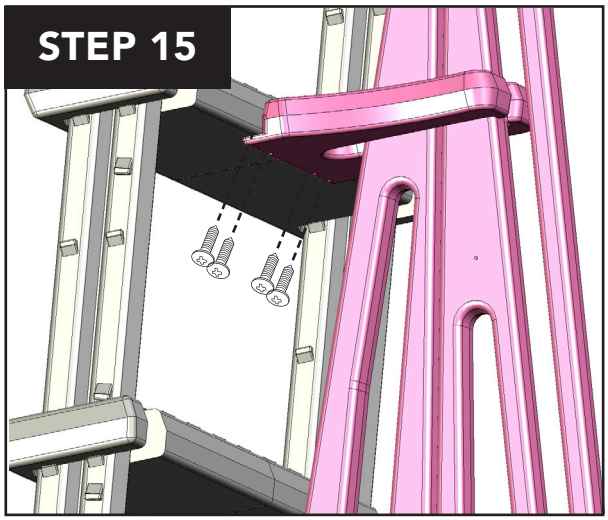

MODIFYING THE LADDER HEIGHT

NOTE *For 54-in deep pools, no modifications are necessary.*

ONLY FOLLOW THIS STEP IF YOUR POOL DEPTH IS 52-IN

16. On one of the handrail assemblies, locate the lower of the two lines on each end. Using a hacksaw, cut each end evenly. Repeat for the other handrail assembly.

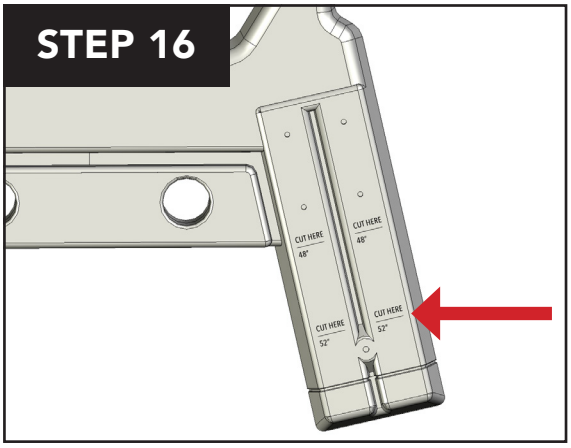

ONLY FOLLOW THIS STEP IF YOUR POOL DEPTH IS 48-IN

17. On one of the handrail assemblies, locate the higher of the two lines on each end. Using a hacksaw, cut each end evenly. Repeat this step for the other handrail assembly.

18. Locate the lines toward the top of each of the four legs. Using a hacksaw, cut all four legs evenly.

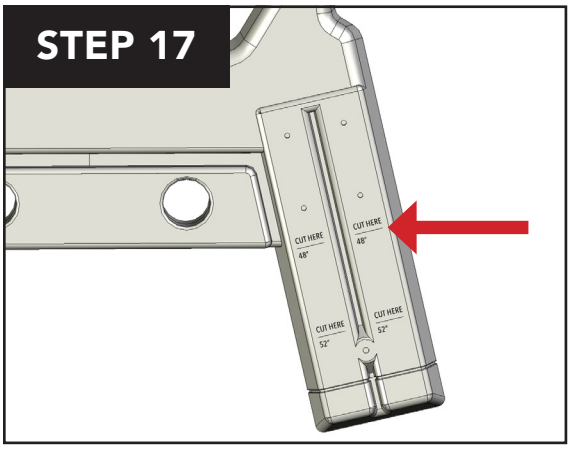

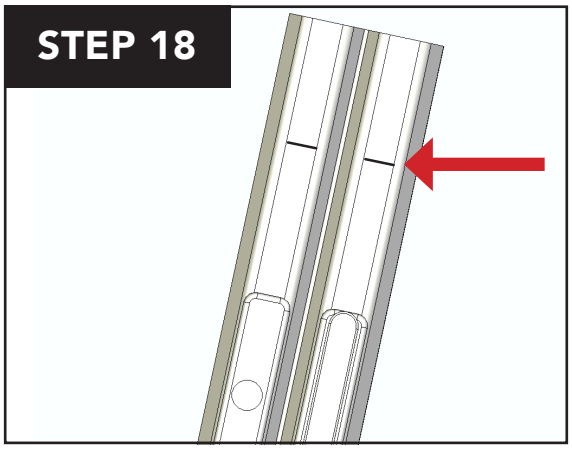

ADDING WEIGHT TO THE LADDER

19. Using a funnel, fill both legs with pea gravel. The entire ladder requires approximately 50-lbs (1/2 Cu. Ft.) of pea gravel.

NOTE *Rinse the pea gravel before filling the legs. In the case of a leak, rinsing the pea gravel will help prevent sand or debris from damaging your pool's filter.*

ATTACHING THE PLATFORM AND HANDRAILS

20. Lay one handrail assembly down on a level surface. With the treads facing the top of the handrail, push the dowels of the platform into the openings on the handrail assembly until they click into place.

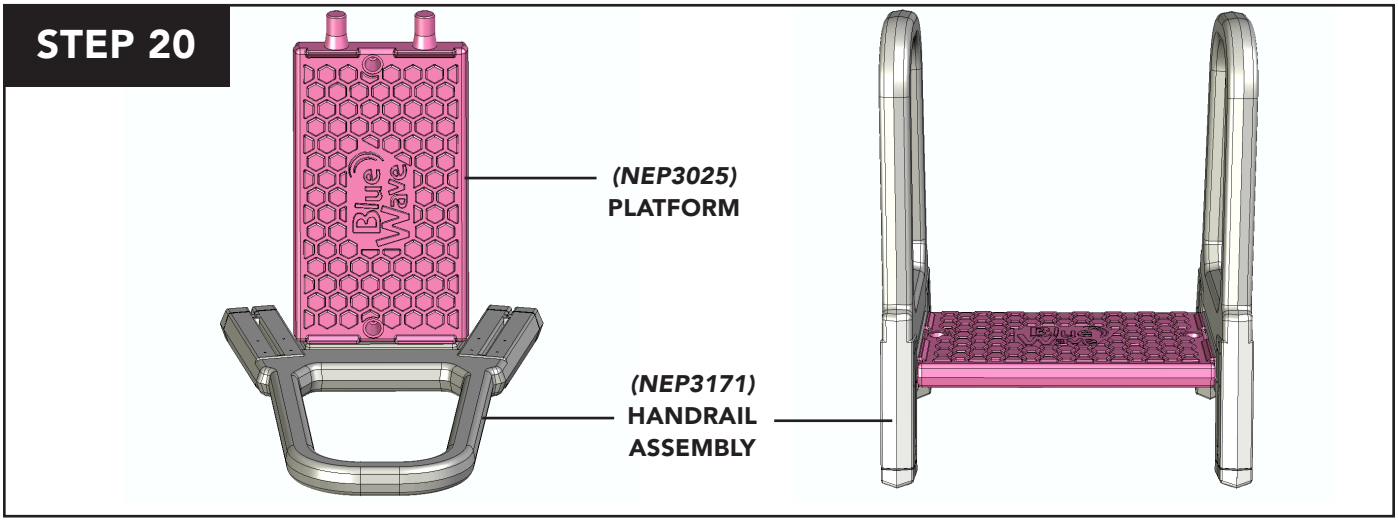

21. To secure the platform to the handrail assembly, center a locking cap over the ends of the dowels on the outside of the handrail assembly. Using a rubber mallet with a small block of wood, gently tap on each cap until it is flush with the handrail assembly.

22. To finish assembling the ladder, slide the handrail assemblies onto the legs. Lubricant may be needed. Secure the handrail assemblies to the legs by using eight 1" screws in the upper pre-marked holes. For 52"/54" pools only, use two 1-1/2" screws in the lower pre-marked holes. Repeat on the second handrail assembly.

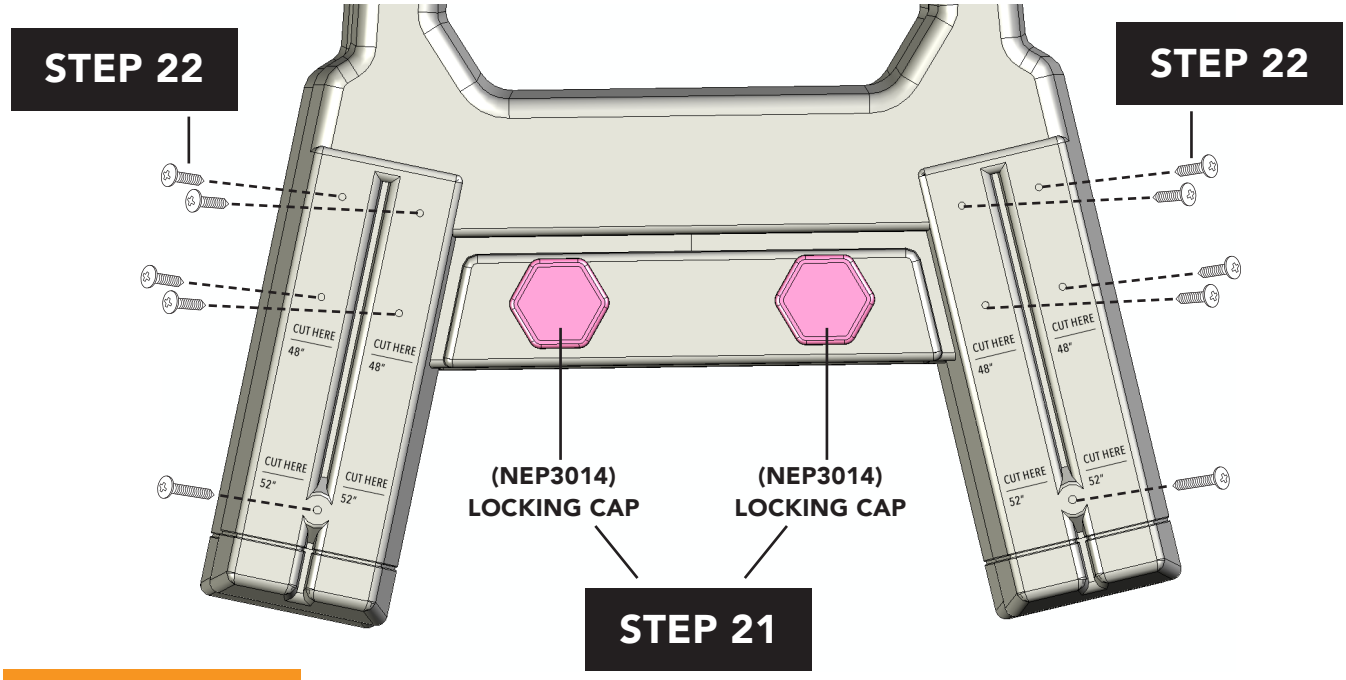

WARNING *Do not over tighten screws to prevent stripping the vinyl.*

POSITIONING AND SECURING THE LADDER

23. Place the entrapment barrier side of the ladder in the pool in the desired location.

24. Once the ladder is in the pool, tip the ladder back-and-forth and side-to-side to release any air that may be trapped inside.

NOTE *This pool ladder is required to be secured to the frame of the pool. Failure to properly secure the ladder to the frame of the pool voids the warranty.*

25. Avoiding the pool wall, position the two pre-drilled holes in the platform over the top seat. Measure and mark the locations of the holes on the pool's top seat. Move the ladder over, and using a 5/16-in drill bit, drill two holes in the top seat of the pool (avoid drilling the pool wall).

26. Reposition the ladder and align the two openings in the platform with the two holes in the top rail. Secure the ladder to the top rail using four washers, two 5-in bolts, and two nuts. Mounting hardware is not included.

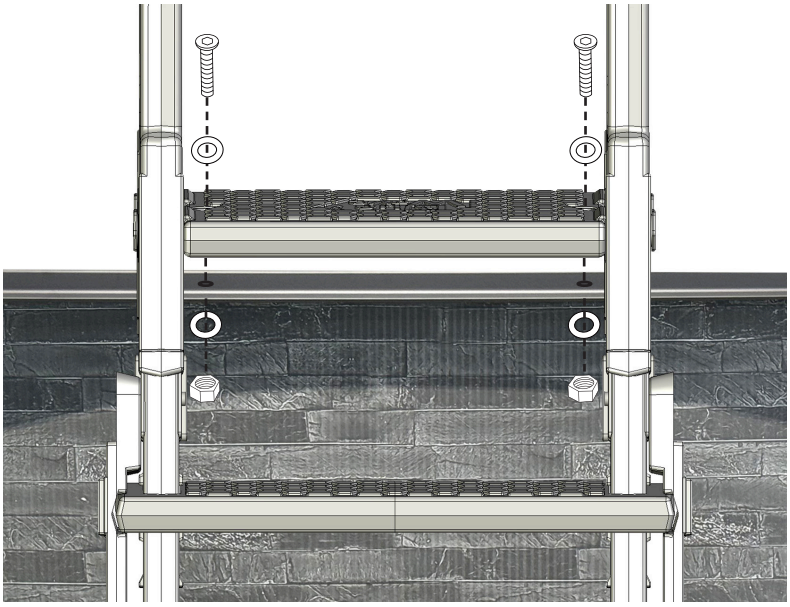

NOTE *It is recommended to install a ladder pad underneath the bottom step to protect the liner. Ladder pad sold separately*

WINTERIZING

- If winterizing the pool is required, this ladder must be removed. Failure to do so can cause the ladder to crack.

- Prior to storing the ladder, rinse off any chemical residue.

- When storing the ladder, it should be protected from the elements.

3-YEAR LIMITED WARRANTY

This product is warranted to the original purchaser to be free from defects in material or workmanship for a period of three (3) years from the date of the original retail purchase.

This warranty does not cover defects or damage due to improper installation, alteration, accident, or any other event beyond the control of the manufacturer. Defects or damage resulting from misuse, abuse, or negligence will void this warranty. This warranty does not cover scratching or damage that may result from normal usage.

This product is not intended for institutional or commercial use; the manufacturer does not assume any liability for such use. Institutional or commercial use will void this warranty.

This warranty is nontransferable and is expressly limited to the repair or replacement of the defective product. During the warranty period, the manufacturer shall repair or replace defective parts at no cost to the purchaser. Shipping charges and insurance are not covered and are the responsibility of the purchaser. Labor charges and related expenses for removal, installation, or replacement of the product or components are not covered under this warranty.

The manufacturer reserves the right to make substitutions to warranty claims if parts are unavailable or obsolete.

The manufacturer shall not be liable for loss of use of the product or other consequential or incidental costs, expenses, or damages incurred by the consumer of any other use. The user assumes all risk of injury resulting from the use of this product.

This warranty is expressly in lieu of all other warranties, expressed or implied, including warranties of merchantability or fitness for use to the extent permitted by Federal or state law. Neither the manufacturer nor any of its representatives assumes any other liability in connection with this product.

All warranty claims must be made through the retailer where the product was originally purchased. A purchase receipt or other proof of date of purchase will be required to process all warranty claims. The model number and part numbers found within the assembly instructions will be required when submitting any parts requests or warranty claims.

For further warranty information or inquiries, please call 1-(800) 759-0977.
Or, email warranty@bluewaveproducts.com

Blue Wave Products, Inc.
101 N. Raddant Rd
Batavia, IL 60510

SKU# NE1222

ÉCHELLE EN A RELEVABLE

MANUEL D'INSTRUCTIONS

Questions, problèmes, pièces manquantes?

Contactez le service client de Blue Wave au 1-800-759-0977, du lundi au vendredi. 8h - 17h (CST)

V3: 01/26

TABLE DES MATIÈRES

MERCI! 3

LISTE DES PIÈCES 4

ASSEMBLAGE DE L'ÉCHELLE RABATTABLE 6

ASSEMBLAGE DE L'ÉCHELLE DANS LA PISCINE 9

ASSEMBLAGE DE LA BARRIÈRE ANTI-ENTRAVE 11

MODIFICATION DE LA HAUTEUR DE L'ÉCHELLE 12

AJOUTER DU POIDS À L'ÉCHELLE 12

FIXATION DE LA PLATE-FORME ET DES MAINS COURANTES 13

POSITIONNEMENT ET FIXATION DE L'ÉCHELLE 14

HIVERNAGE 14

GARANTIE 15

MERCI!

Merci d'avoir acheté ce produit. Nous travaillons 24 heures sur 24 et dans le monde entier pour nous assurer que nos produits maintiennent la meilleure qualité possible. Toutefois, dans les rares cas où des problèmes surviendraient lors de l'assemblage ou de l'utilisation de ce produit, veuillez contacter le **service client de Blue Wave au 1-800-759-0977** pour obtenir une assistance immédiate avant de contacter votre détaillant. Veuillez lire les informations relatives à la garantie au dos de ces instructions d'assemblage pour plus de détails.

⚠ AVERTISSEMENT

Pour éviter tout risque de blessure, veuillez lire l'intégralité de ce manuel avant d'essayer d'assembler, d'utiliser ou d'installer le produit.

- Lisez attentivement ces instructions.
- N'utilisez pas l'échelle à d'autres fins - elle est uniquement destinée à être utilisée avec une piscine hors sol.
- Poids maximum autorisé : 225 lbs (102 kg)
- Vérifiez l'état des composants de l'échelle avant le montage et avant chaque utilisation.
- En hiver, il est recommandé de démonter, nettoyer et sécher l'échelle pour la maintenir en état de marche.
- Le non-respect des règles d'entretien peut présenter un risque grave pour la santé.
- Une seule personne à la fois doit monter sur l'échelle.
- Ne pas s'asseoir, plonger ou sauter de l'échelle.
- Ne pas rebondir ou sauter sur l'échelle.
- Ne laissez pas les enfants utiliser l'échelle sans une surveillance étroite et compétente.
- Placez l'échelle sur un sol solide et plat.
- Placez l'autocollant de sécurité fourni sur une marche de l'échelle de manière qu'il soit bien visible.
- L'utilisation d'eau salée annule la garantie.
- L'installation doit être conforme aux codes de l'autorité compétente et peut nécessiter des permis de construire, de plomberie, d'électricité, de zonage, etc.
- Cette échelle est conçue et fabriquée pour une hauteur de paroi de piscine et/ou une plage spécifique de la piscine.
- Lorsque la piscine n'est pas occupée, pivotante et sécurisée, décollable ou glissante et sécurisée.
- Appliquez 6 des 12 étiquettes d'avertissement sur chacune des rampes gauche et droite afin que 6 soient orientées vers l'extérieur et 6 face à la piscine.

CONSERVEZ CE MANUEL D'INSTRUCTIONS

L'UTILISATION DE PIÈCES DE REMPLACEMENT NON AUTORISÉES ANNULE LA GARANTIE.

ATTENTION, INSTALLATEUR ! CE MANUEL CONTIENT DES INFORMATIONS IMPORTANTES SUR L'INSTALLATION, LE FONCTIONNEMENT ET L'UTILISATION EN TOUTE SÉCURITÉ DE CETTE ÉCHELLE ET DOIT ÊTRE FOURNI À L'UTILISATEUR FINAL DE CE PRODUIT. LE FAIT DE NE PAS LIRE ET DE NE PAS SUIVRE TOUTES LES INSTRUCTIONS PEUT ENTRAÎNER DES BLESSURES GRAVES.

LISTE DES PIÈCES (PAS À L'ÉCHELLE)

NE1222

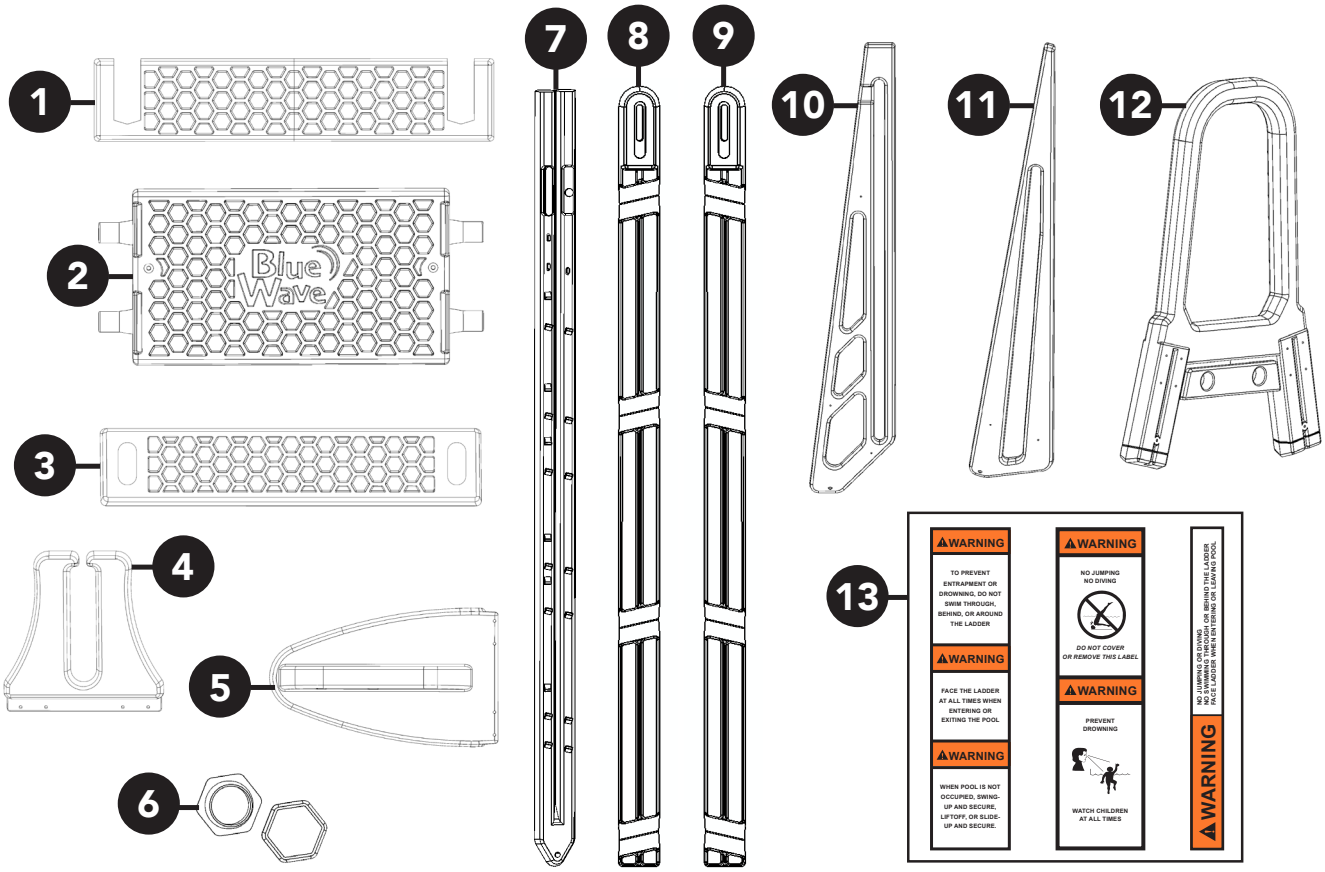

#	PART #	DESCRIPTION	QTY.
1	NEP3028	Marche	8
2	NEP3025	Plateforme	1
3	NEP3020	Marche inférieure	2
4	NEP3174	Support supérieur	1
5	NEP3175	Base inférieure	1
6	NEP3014	Capuchon de verrouillage	4
7	NEP3023	Jambe (deux avec trous pré-percés, deux sans)	4
8	NEP3022	Connecteur de la marche gauche	1
9	NEP3026	Connecteur de la marche droite	1
10	NEP3172	Grande barrière (quatre ouvertures)	1
11	NEP3173	Petite barrière (une ouverture)	1
12	NEP3171	Connecteur de mains courantes	2
13	-	Étiquettes d'avertissement*	12
-	NEP3176	Quincaillerie (treize vis de 1-1/2 », trente-six vis de 1 », deux vis de 3-1/2 », Deux écrous, deux rondelles)	1

* Appliquez 6 des 12 étiquettes d'avertissement sur chacune des rampes gauche et droite de sorte que 6 soient orientées vers l'extérieur et 6 face à la piscine.

MATÉRIEL SUPPLÉMENTAIRE REQUIS:

Tournevis cruciforme, perceuse avec mèche de 5/16 pouces, scie à métaux, entonnoir, 50 lb (un sac de 1/2 pi³) de gravier, lubrifiant, Maillet en caoutchouc avec un petit bloc de bois, marqueur à pointe fine et kits de montage.

LISTE DES PIÈCES (SUITE)

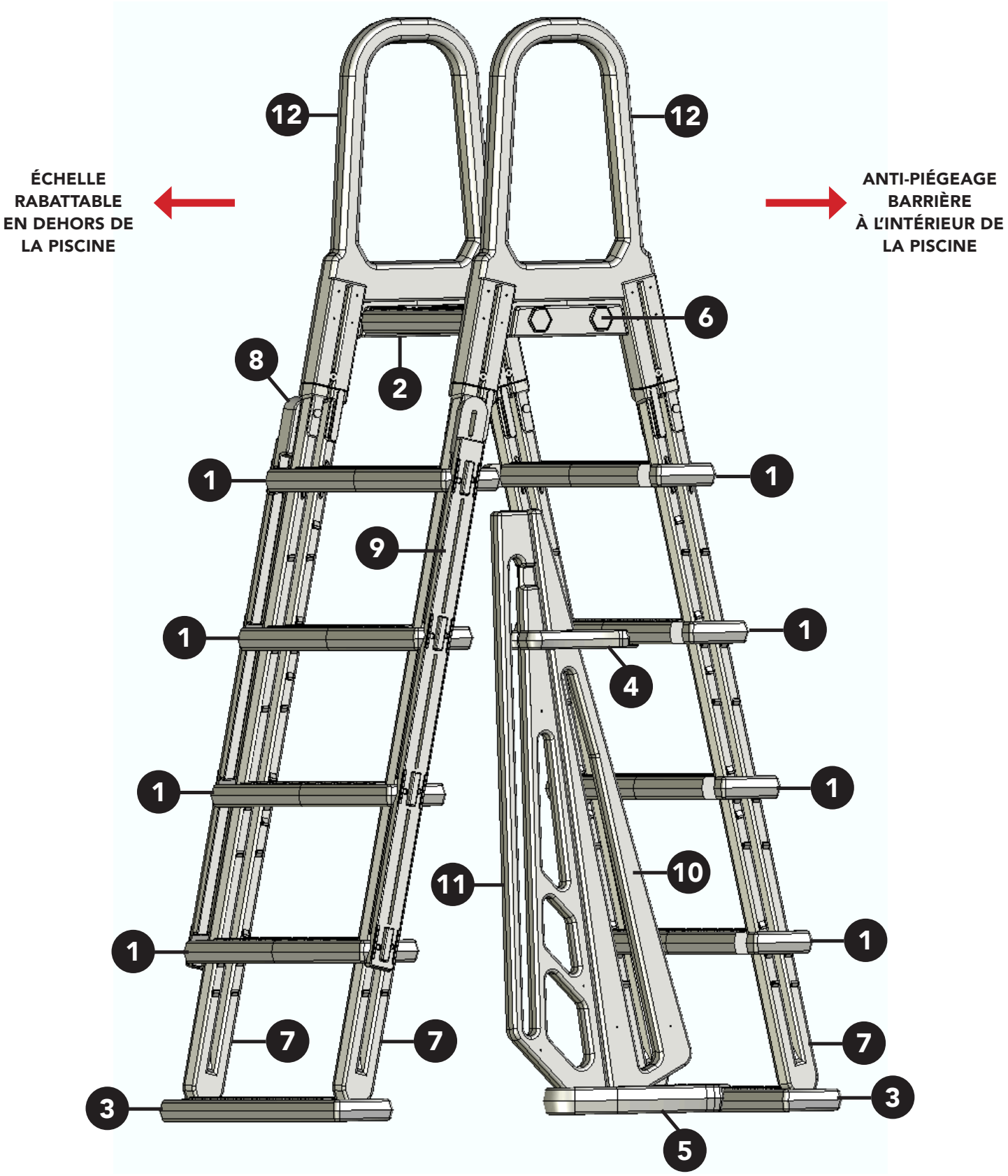

ASSEMBLAGE DE L'ÉCHELLE RABATTABLE

1. Identifiez l'ensemble des pieds avec les trous pré-percés. Pour assurer le bon placement des pieds, la butée de main courante ronde saillante sera tournée LOIN de la paroi de la piscine, tandis que la butée de main courante saillante allongée sera face à la paroi de la piscine.

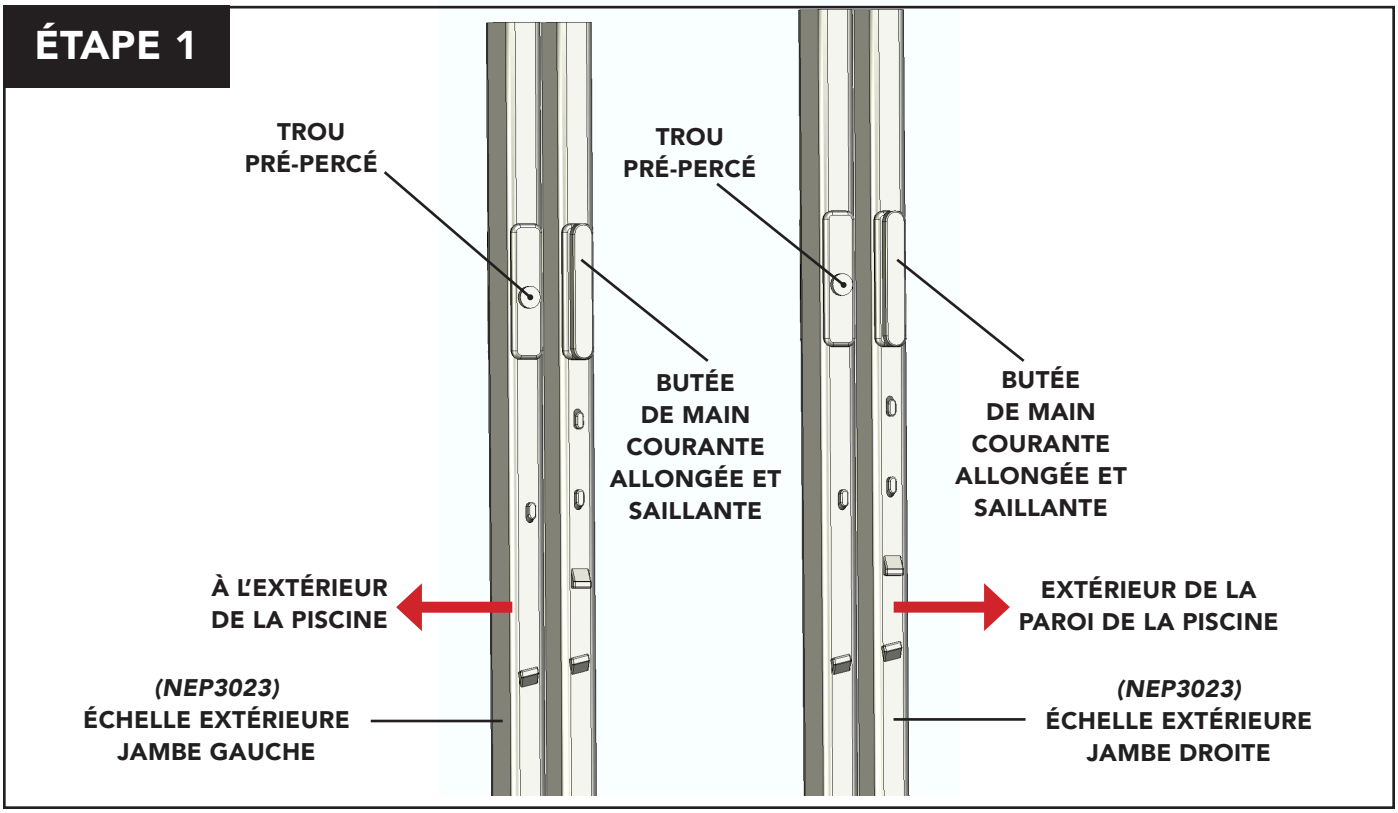

2. Placez la marche du bas sur une surface plane avec les marches vers le haut. Tenez chaque jambe à la verticale avec le côté pointu vers le bas. Poussez chaque jambe dans l'indentation de la marche inférieure jusqu'à ce qu'elles s'enclenchent toutes les deux.

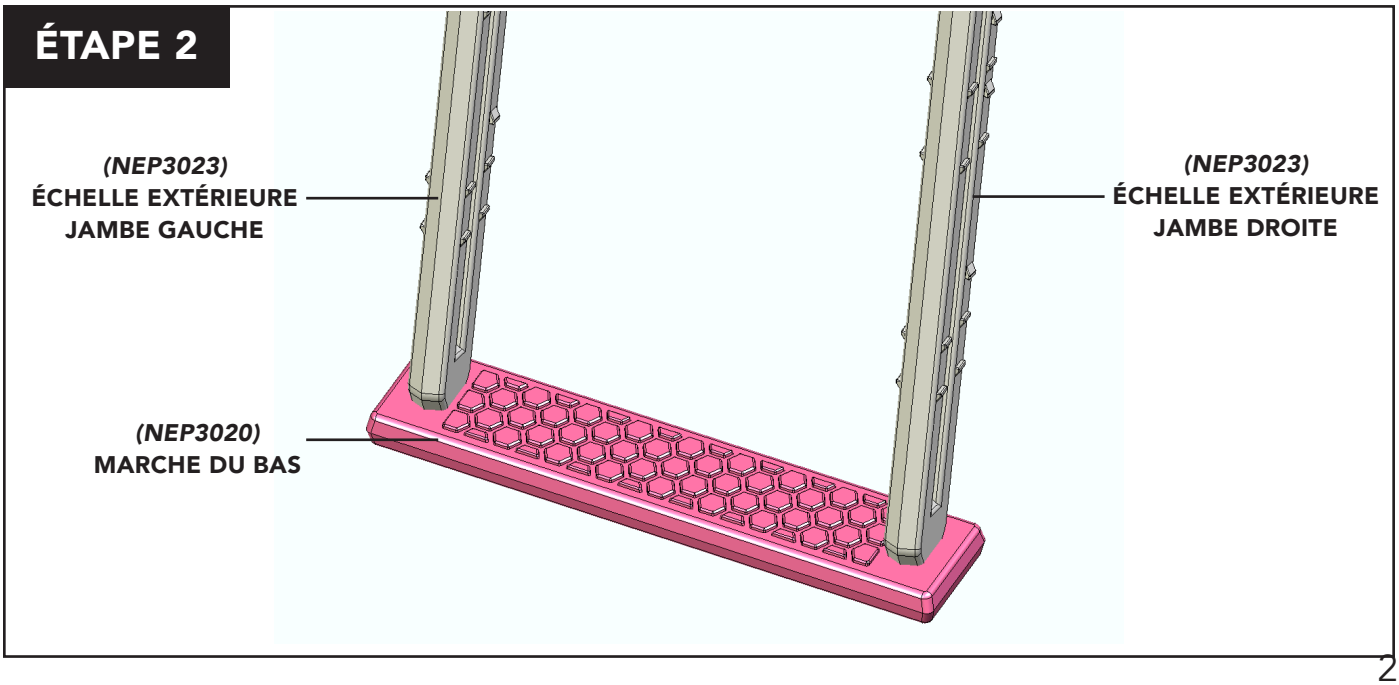

ASSEMBLAGE DE L'ÉCHELLE RABATTABLE (SUITE)

3. Installez la première marche sur les jambes gauche et droite du cadre de l'échelle. Faites glisser le marchepied dans les supports de marche saillants les plus hauts et fixez-le en vissant une vis de 1-1/2" dans la découpe du côté droit du marchepied. Répétez l'opération sur le côté gauche.

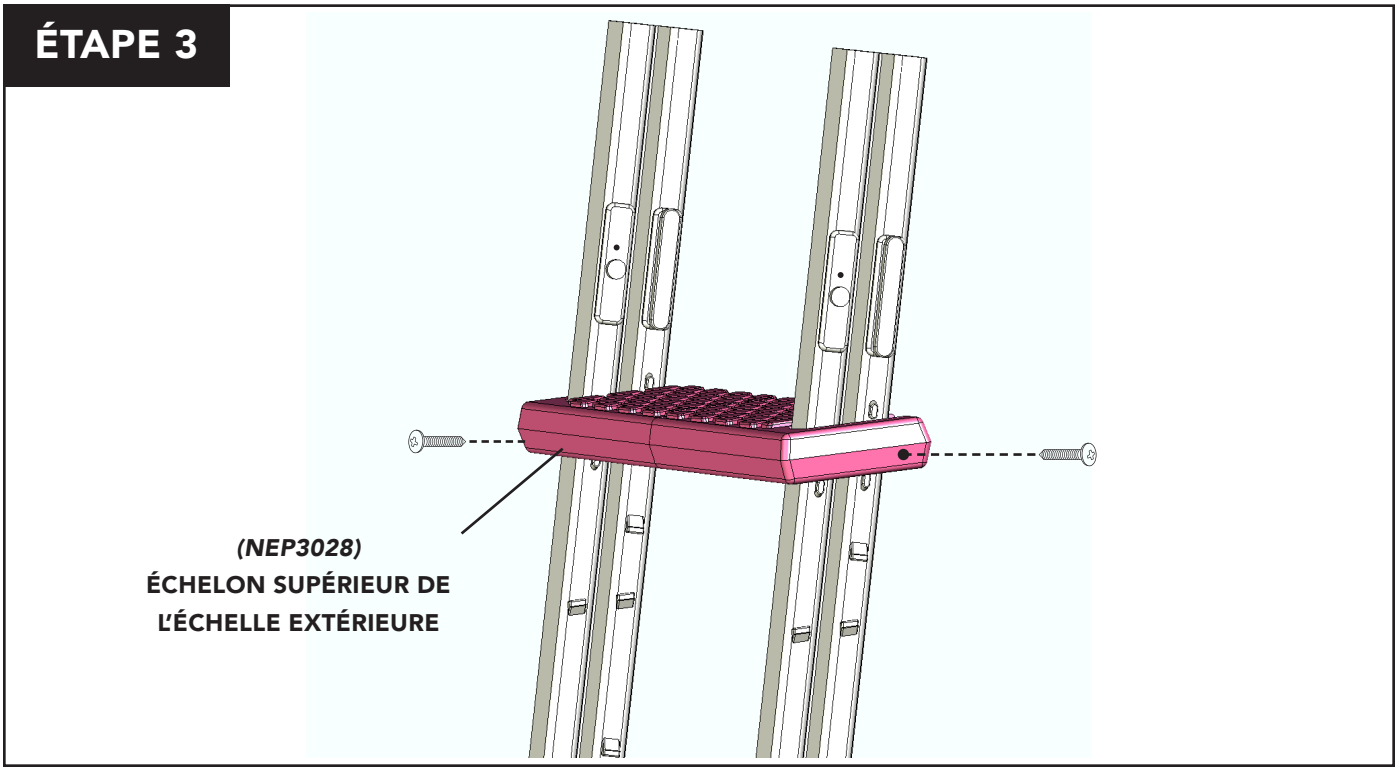

AVERTISSEMENT *Ne serrez pas trop les vis pour éviter de dénuder le vinyle.*

4. Posez le cadre extérieur de l'échelle sur son côté gauche et glissez les marches 2, 3 et 4 dans les supports de marche saillants.

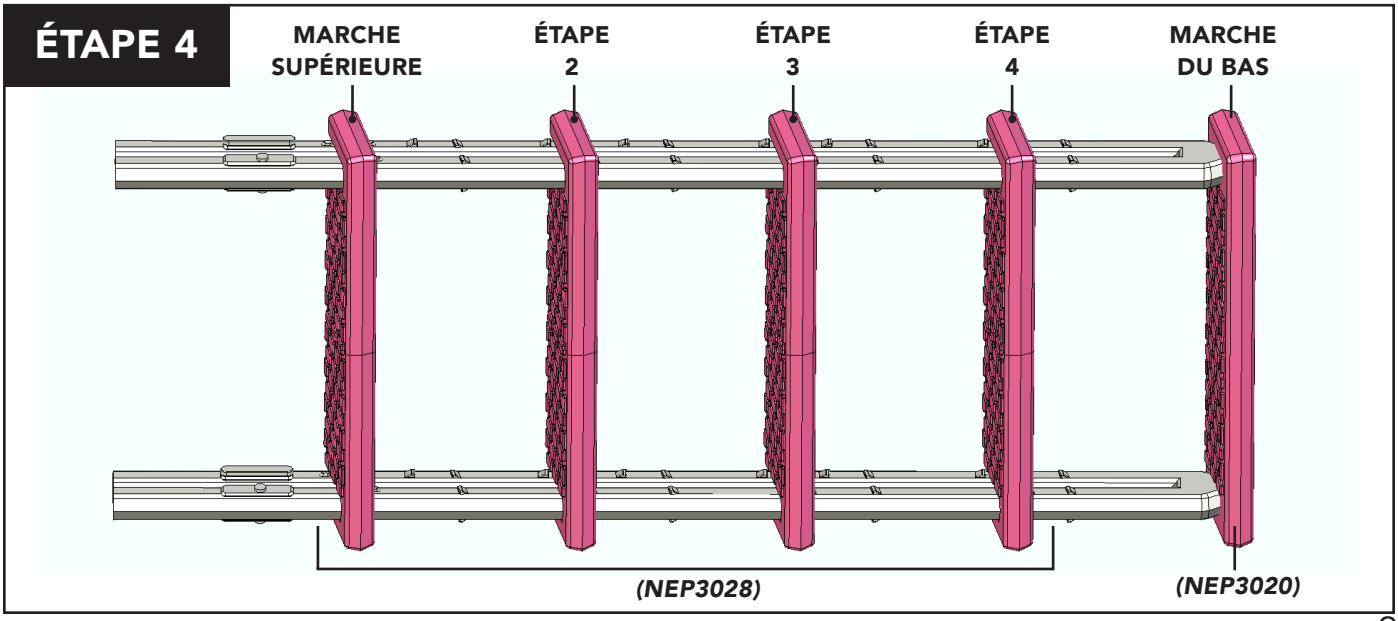

ASSEMBLAGE DE L'ÉCHELLE RABATTABLE (SUITE)

5. Lorsque les marches sont positionnées, fixez le connecteur de marche droit aux trous pré-percés sur les marches à l'aide de deux vis de 1" de chaque côté. Répétez l'opération sur le côté gauche.

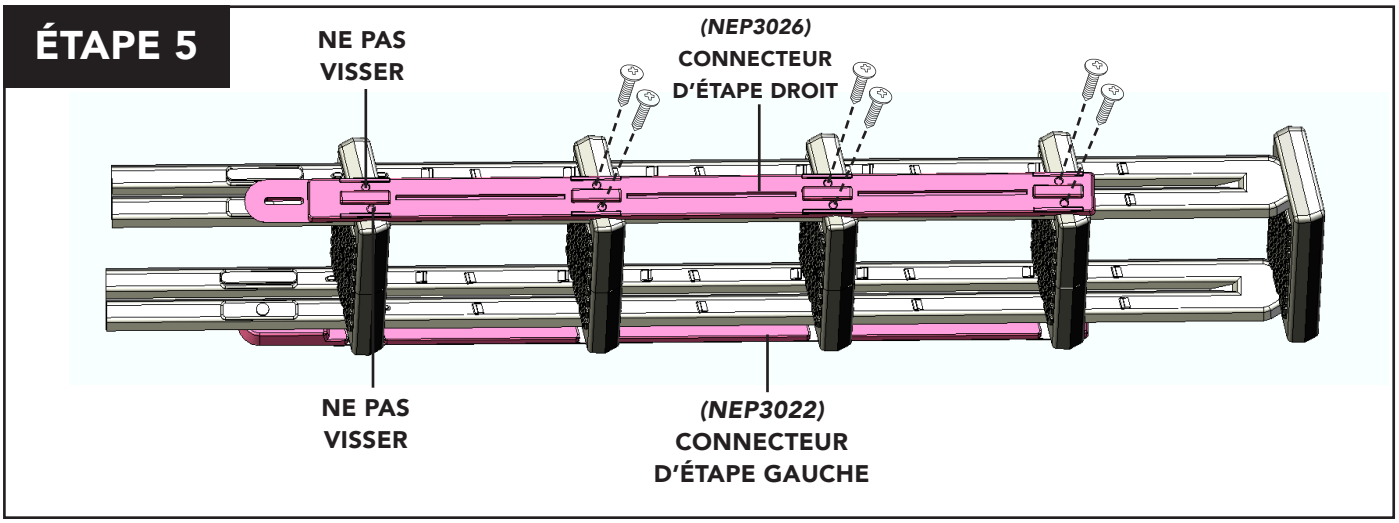

NOTE *Ne vissez pas les connecteurs de pas sur la marche supérieure.*

6. Une fois les connecteurs de marche fixés aux marches, fixez le connecteur de marche droit au cadre de l'échelle en enfilant la vis de 3-1/2" de l'intérieur à travers le trou pré-percé. Placez la rondelle et l'écrou à l'extrémité de la vis, ne serrez pas trop. Répétez l'opération sur le côté gauche.

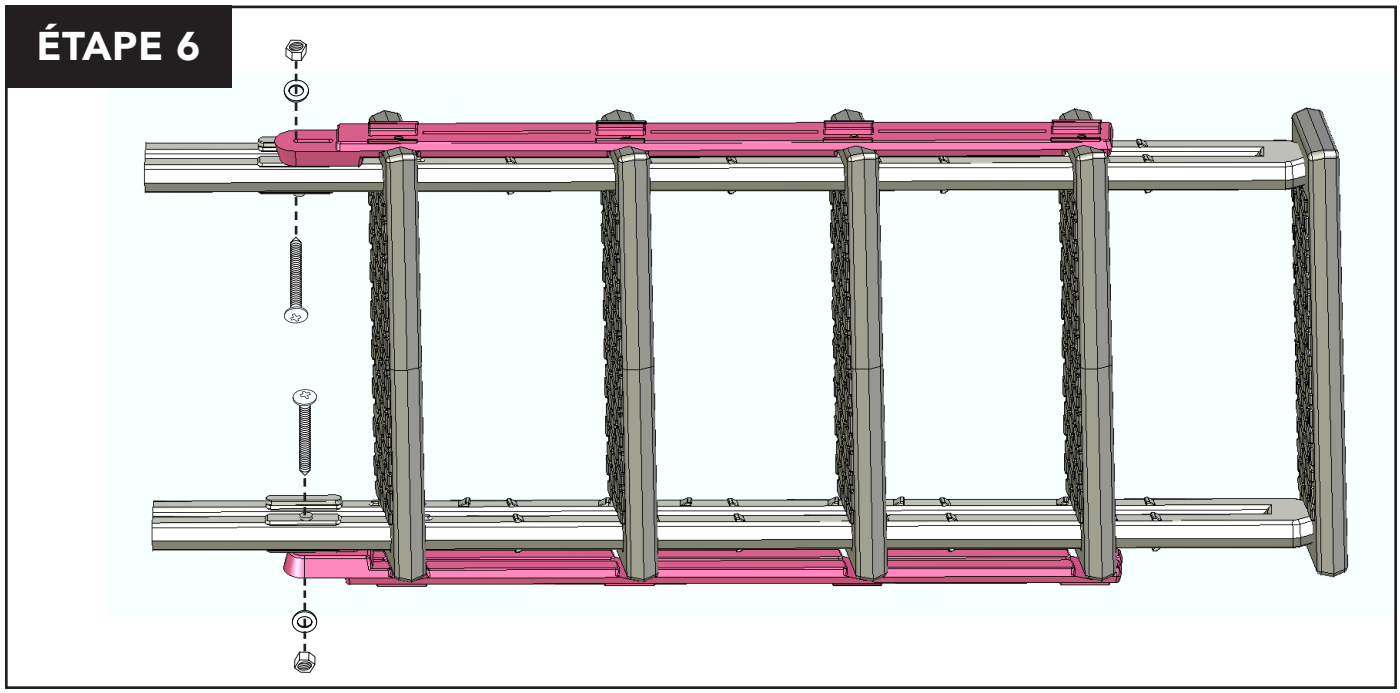

AVERTISSEMENT *Ne serrez pas trop les vis pour éviter de dénuder le vinyle.*

ASSEMBLAGE DE L'ÉCHELLE DANS LA PISCINE

7. Identifiez l'ensemble des pieds sans les trous pré-percés. Pour assurer le bon placement des pieds, la butée de main courante ronde saillante sera orientée VERS le centre de la piscine, tandis que la butée de main courante saillante allongée sera face à la paroi de la piscine.

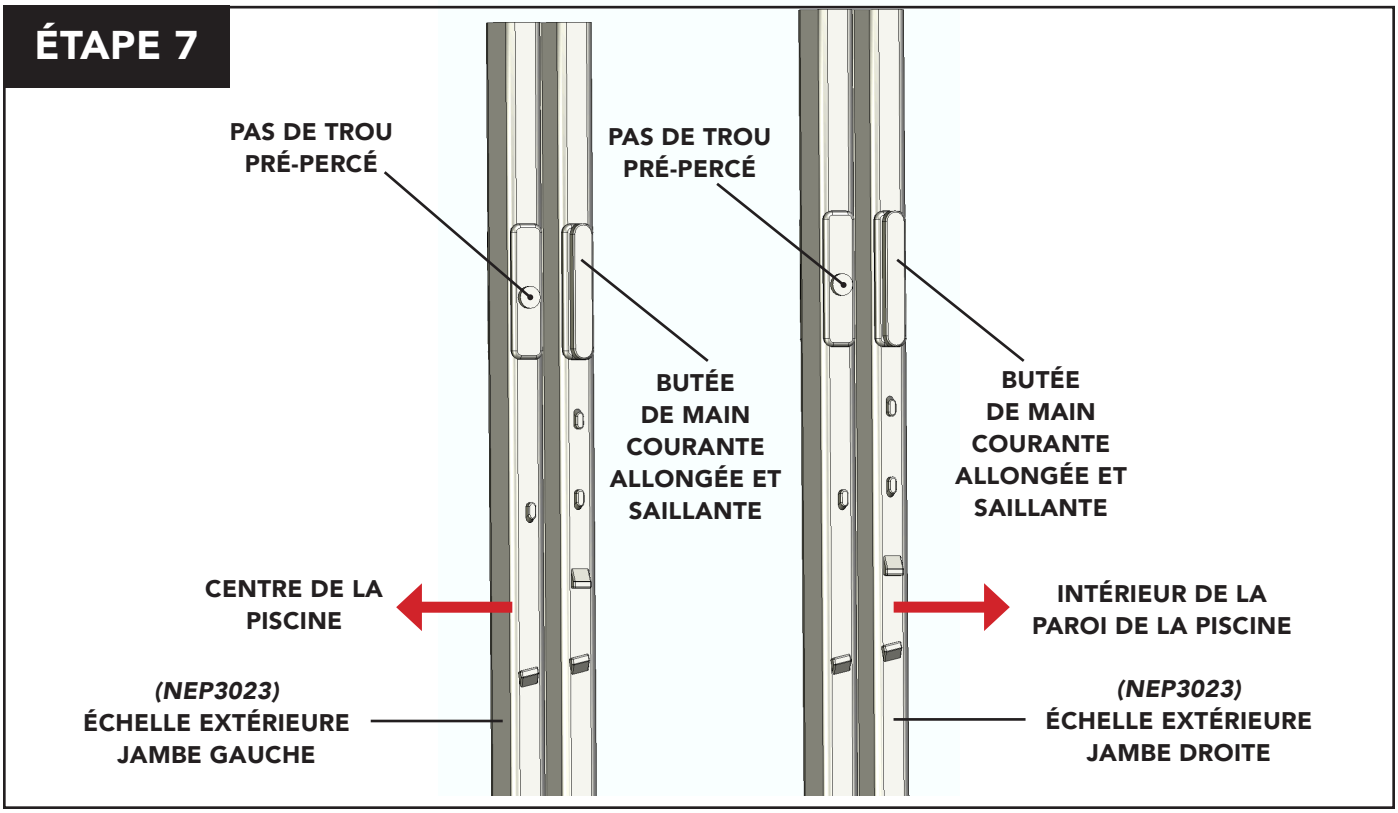

8. Placez la marche du bas sur une surface plane avec les marches vers le haut. Tenez chaque jambe à la verticale avec le côté pointu vers le bas. Poussez chaque jambe dans l'indentation de la marche inférieure jusqu'à ce qu'elles s'enclenchent toutes les deux.

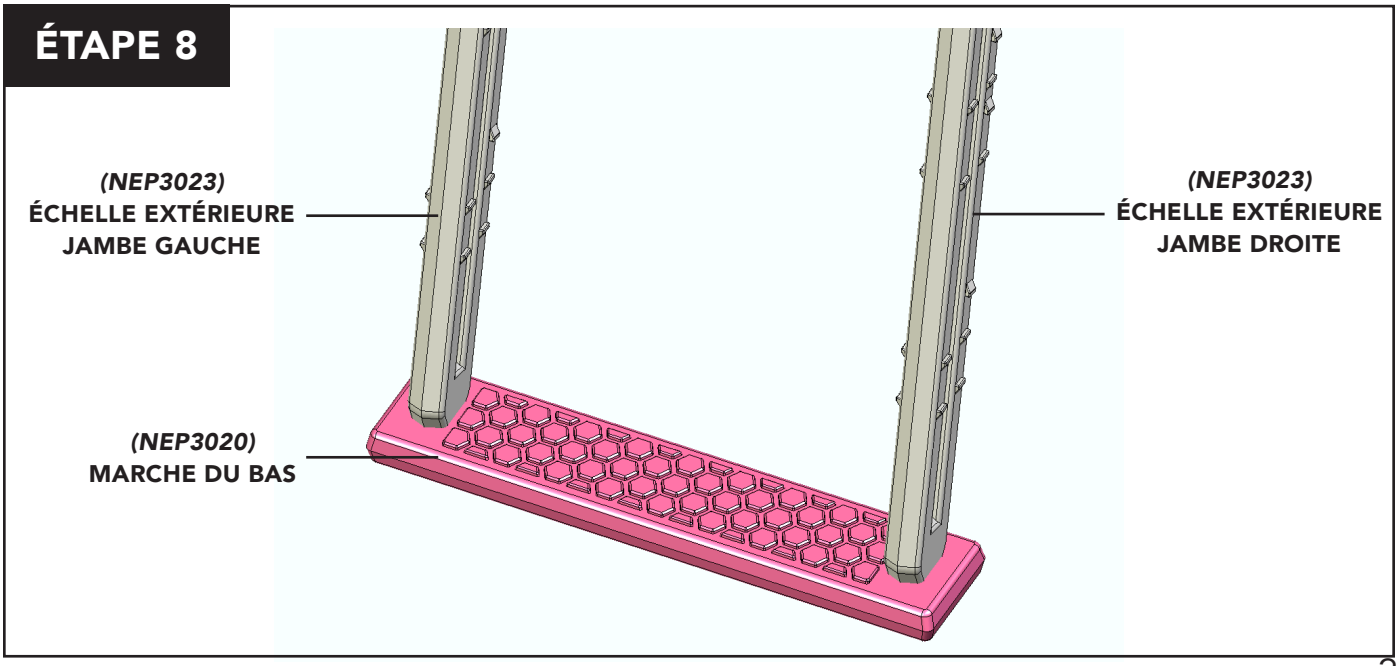

ASSEMBLAGE DE L'ÉCHELLE DANS LA PISCINE (SUITE)

9. Posez le cadre de l'échelle sur son côté gauche et faites glisser les quatre marches dans les supports de marches saillants.

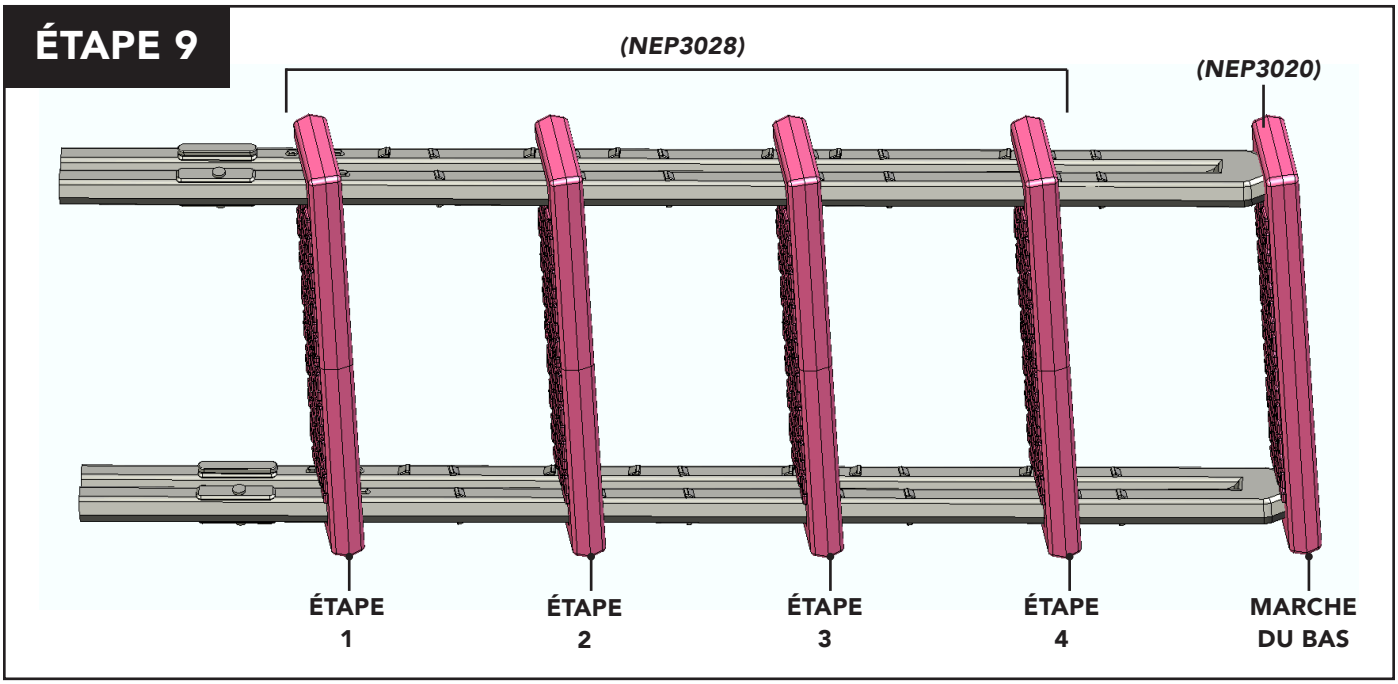

10. Fixez les marches sur le cadre de l'échelle en vissant une vis de 1-1/2" dans la découpe des marches. Retournez le cadre de l'échelle et répétez l'opération sur le côté gauche.

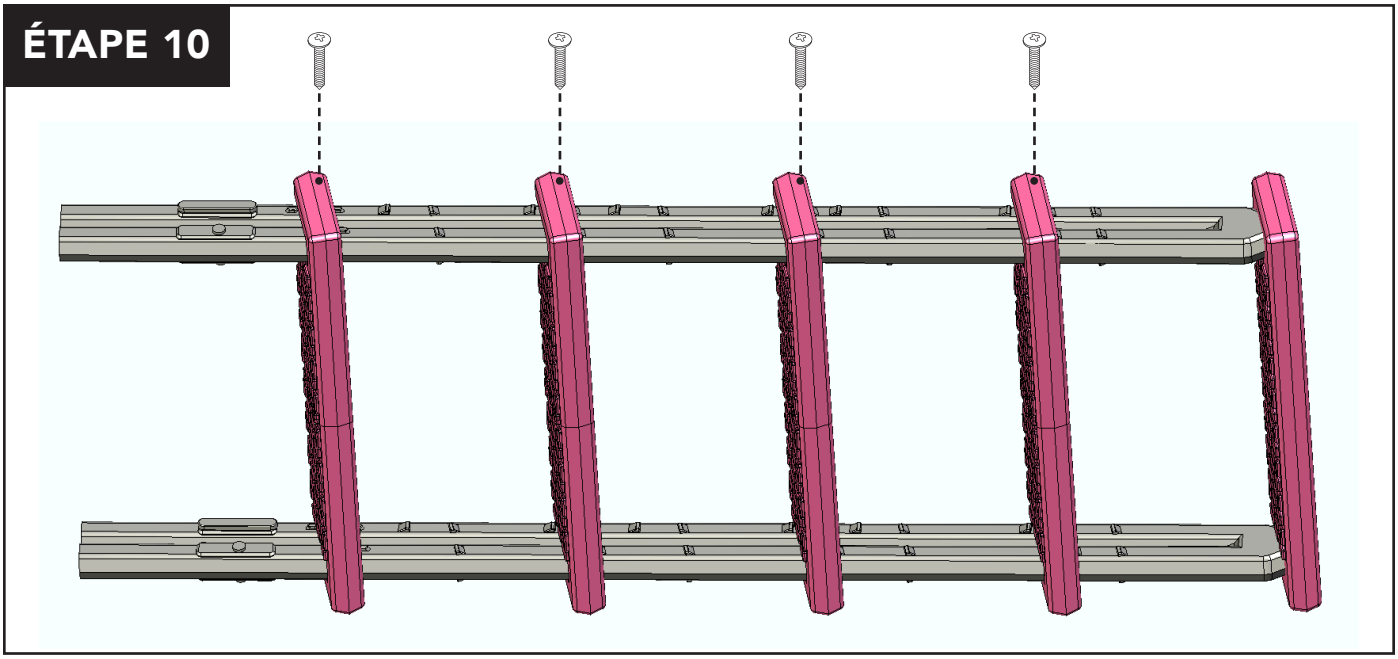

AVERTISSEMENT *Ne serrez pas trop les vis pour éviter de dénuder le vinyle.*

ASSEMBLAGE DE LA BARRIÈRE ANTI-ENTRAVE

NOTE *C'est le côté de l'échelle sans les marches relevables.*

11. Placez la base inférieure sur une surface plane. Positionnez la petite et la grande barrière de manière à ce que les côtés droits se fassent face. Le côté coudé de la grande barrière doit être orienté vers le bord arrondi de la base et le côté coudé de la petite barrière doit être orienté vers le bord droit de la base.

12. Pousser les deux barrières dans la rainure de la base inférieure jusqu'à ce qu'elles s'enclenchent.

13. Faites glisser l'étrier supérieur sur la petite barrière. Utilisez la rainure de la grande barrière pour permettre à l'étrier de glisser dans l'ouverture de la grande barrière. Poussez légèrement l'étrier vers le bas pour fixer les deux barrières ensemble.

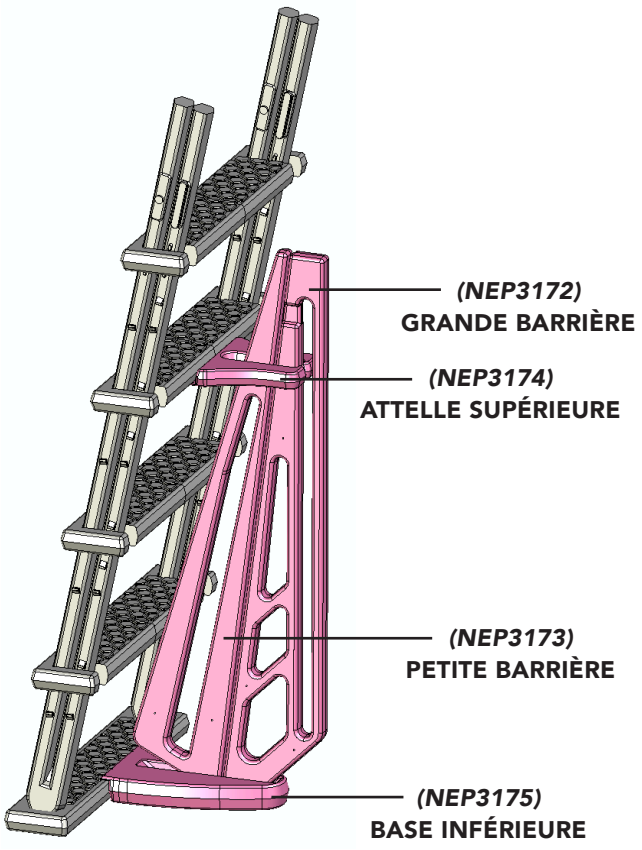

14. Alignez l'encoche sur le bord droit de la base inférieure en la centrant sur la partie intérieure de la marche inférieure. Fixez-la en perçant deux vis de 1,25 pouce à travers la base dans la marche.

15. Alignez l'encoche sur le bord droit de la barrière anti-entrave en la centrant sur la partie intérieure de la quatrième marche en partant du bas. Fixez-la en perçant deux vis de 1,25 pouce à travers l'entretoise dans la marche.

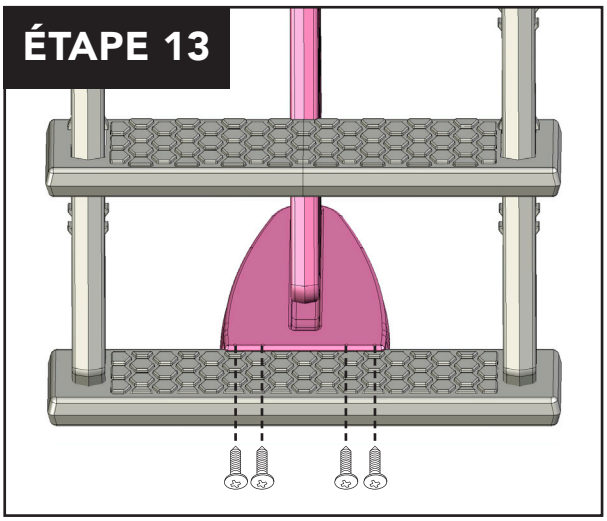

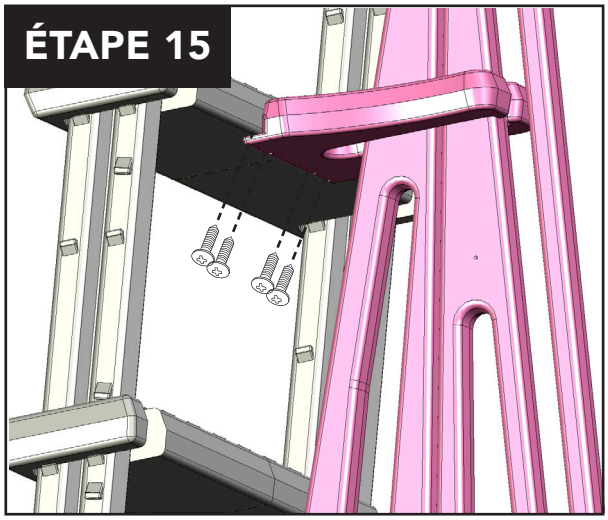

MODIFICATION DE LA HAUTEUR DE L'ÉCHELLE

NOTE

Pour les piscines de 54 pouces de profondeur, aucune modification n'est nécessaire.

NE SUIVEZ CETTE ÉTAPE QUE SI LA PROFONDEUR DE VOTRE PISCINE EST DE 52 POUCES

16. Sur l'une des mains courantes, repérez la plus basse des deux lignes à chaque extrémité. À l'aide d'une scie à métaux, coupez chaque extrémité uniformément. Répétez l'opération pour l'autre main courante.

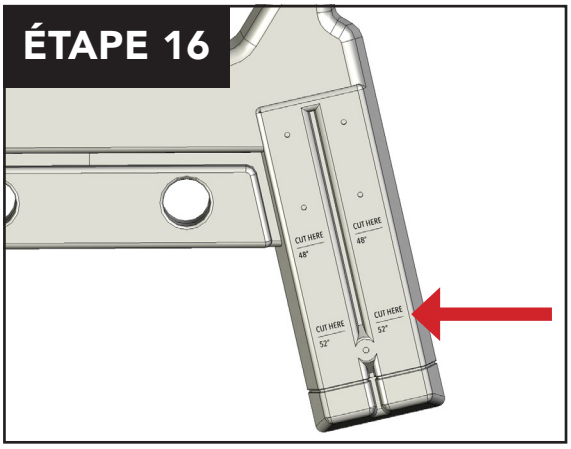

NE SUIVEZ CETTE ÉTAPE QUE SI LA PROFONDEUR DE VOTRE PISCINE EST DE 48 POUCES

17. Sur l'une des mains courantes, repérez la plus haute des deux lignes à chaque extrémité. À l'aide d'une scie à métaux, coupez chaque extrémité uniformément. Répétez cette étape pour l'autre main courante.

18. Repérez les lignes vers le haut de chacun des quatre pieds. À l'aide d'une scie à métaux, coupez les quatre pieds uniformément.

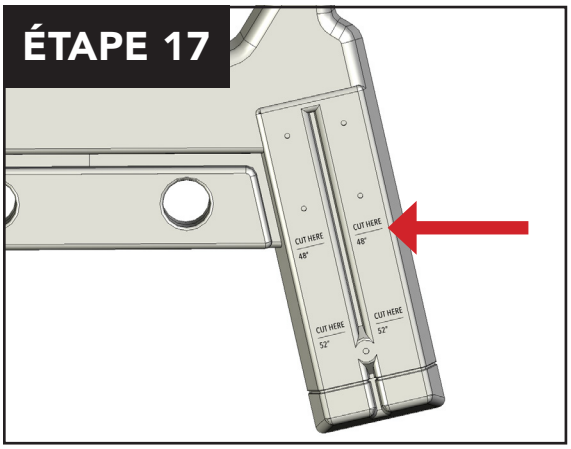

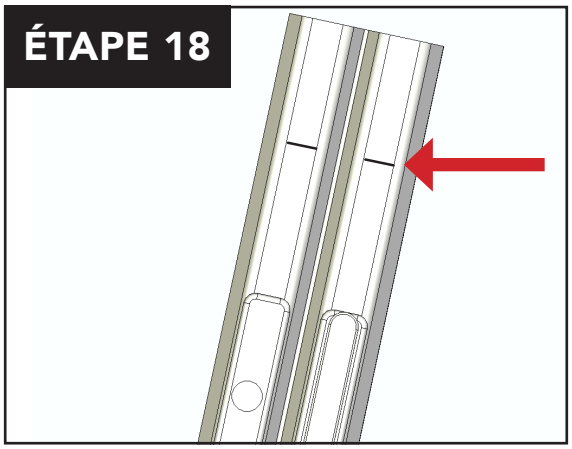

AJOUTER DU POIDS À L'ÉCHELLE

19. À l'aide d'un entonnoir, remplissez les deux cuisses de gravier de pois. L'échelle entière nécessite environ 50 lb (1/2 pi³) de gravier.

NOTE

Rincez le gravier avant de remplir les cuisses. En cas de fuite, le rinçage du gravier permettra d'éviter que le sable ou les débris n'endommagent le filtre de votre piscine.

FIXATION DE LA PLATE-FORME ET DES MAINS COURANTES

20. Poser une main courante sur une surface plane. Les marches étant orientées vers le haut de la main courante, pousser les chevilles de la plate-forme dans les ouvertures de la main courante jusqu'à ce qu'elles s'enclenchent.

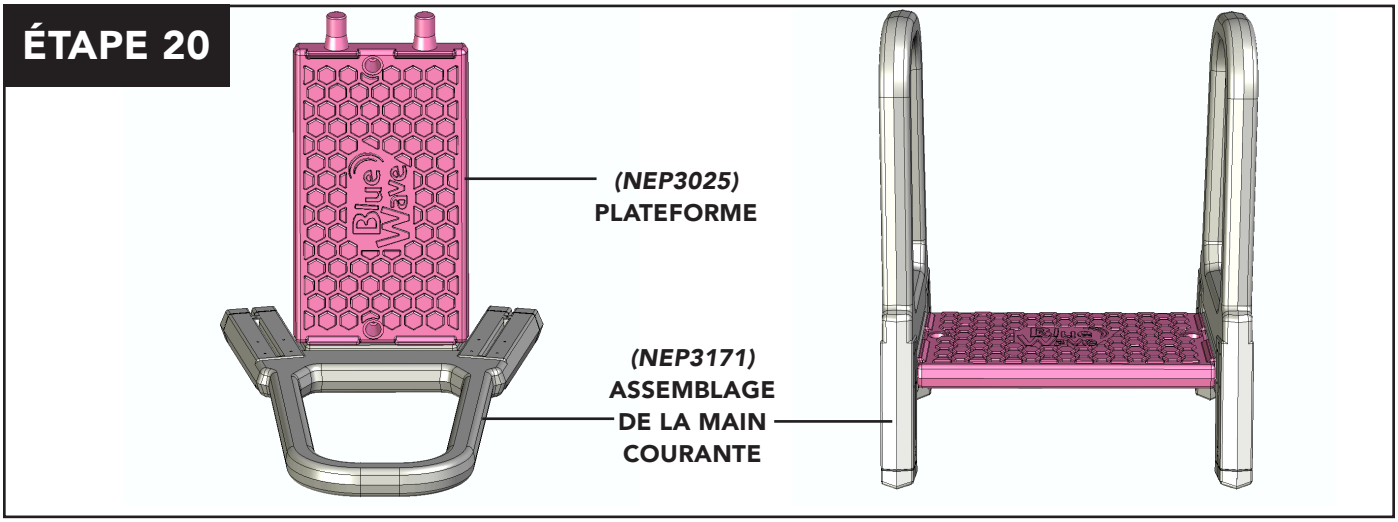

21. Pour fixer la plate-forme à la main courante, centrez un capuchon de verrouillage sur les extrémités des chevilles à l'extérieur de la main courante. À l'aide d'un maillet en caoutchouc avec un petit bloc de bois, tapotez doucement sur chaque capuchon jusqu'à ce qu'il affleure l'ensemble de la main courante.

22. Pour terminer l'assemblage de l'échelle, faites glisser les ensembles de main courante sur les pieds. Du lubrifiant peut être nécessaire. Fixez les ensembles de main courante aux pieds à l'aide de huit vis de 1" dans les trous supérieurs pré-marqués. Pour les piscines de 52 « /54 » uniquement, utilisez deux vis de 1-1/2 » dans les trous inférieurs pré-marqués. Répétez l'opération sur le deuxième assemblage de la main courante.

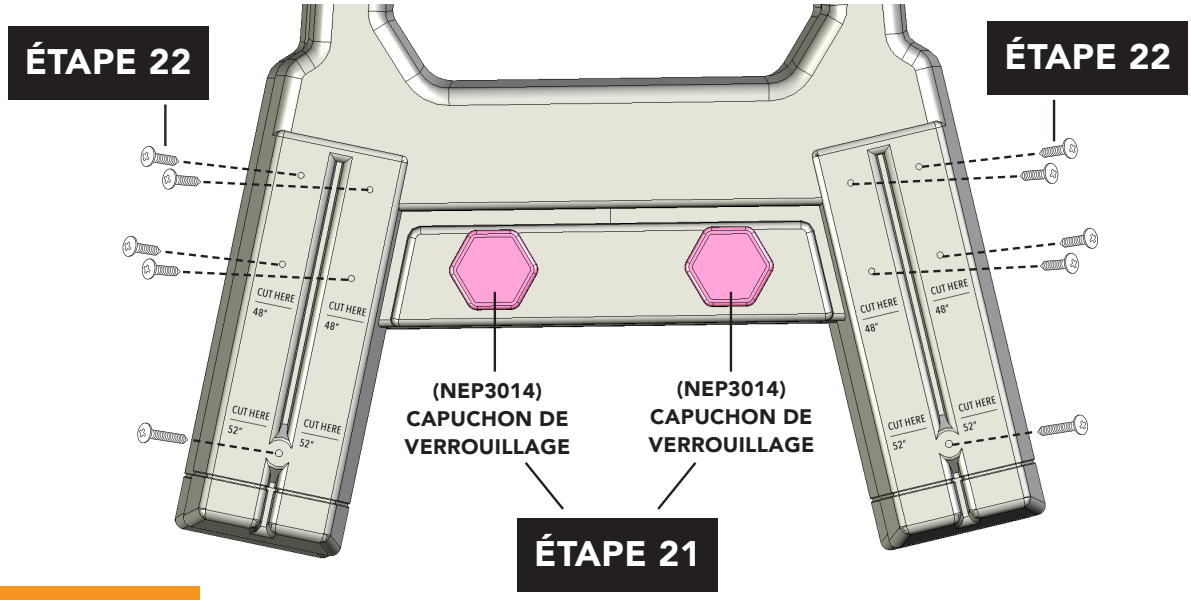

AVERTISSEMENT *Ne serrez pas trop les vis pour éviter de dénuder le vinyle.*

POSITIONNEMENT ET FIXATION DE L'ÉCHELLE

23. Placez le côté barrière anti-entrave de l'échelle dans la piscine à l'endroit désiré.

24. Une fois l'échelle dans la piscine, balancez la d'avant en arrière et d'un côté à l'autre pour libérer l'air qui pourrait s'y trouver.

NOTE *Cette échelle de piscine doit être fixée au cadre de la piscine. Si l'échelle n'est pas correctement fixée au cadre de la piscine, la garantie est annulée.*

25. En évitant la paroi de la piscine, positionnez les deux trous pré-percés dans la plate-forme au-dessus du siège supérieur. Mesurez et marquez l'emplacement des trous sur le siège supérieur de la piscine. Déplacez l'échelle et, à l'aide d'un foret de 5/16 po, percez deux trous dans le rail supérieur de la piscine.

26. Repositionnez l'échelle et alignez les deux ouvertures de la plate-forme avec les deux trous du rail supérieur. Fixez l'échelle au rail supérieur à l'aide de quatre rondelles, de deux boulons de 5 pouces et de deux écrous. Le matériel de montage n'est pas inclus.

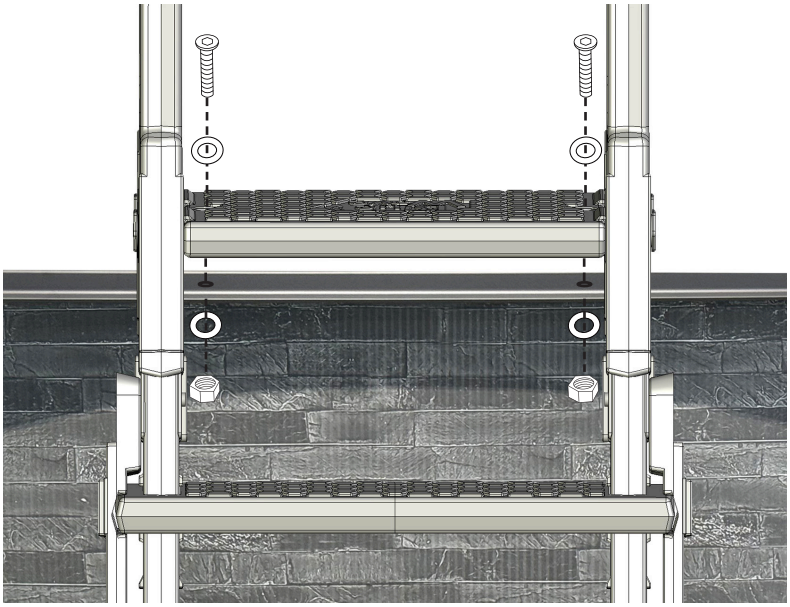

NOTE *Il est recommandé d'installer un tapis d'échelle sous la marche inférieure pour protéger le revêtement. Tapis d'échelle vendu séparément.*

HIVERNISATION

- Si l'hivernisation de la piscine est nécessaire, cette échelle doit être retirée. Dans le cas contraire, l'échelle risque de se fissurer.

- Avant de ranger l'échelle, rincez tout résidu de produit chimique.

- Lorsque l'échelle est rangée, elle doit être protégée des intempéries.

GARANTIE LIMITÉE DE 3 ANNÉE

La garantie du produit est valide pour l'acheteur original en ce qui a trait aux pièces défectueuses ou à la main-d'oeuvre pour une période de 3 année de la date d'achat.

Cette garantie n'est couvre pas les dommages causés par accident, par modification, par une installation défectueuse, ou tout autre événement hors du contrôle du fabricant. Tout défaut ou dommage résultant de la négligence ou d'une mauvaise utilisation annule cette garantie. La présente garantie ne couvre pas les égratignures ou les dommages attribuables à un usage normal.

Ce produit n'est pas destiné à un usage institutionnel ou commercial; le fabricant décline toute responsabilité pour une telle utilisation. Un usage institutionnel ou commercial annule cette garantie.

Cette garantie est non transférable et est expressément limitée à la réparation ou au remplacement du produit défectueux. Au cours de la période de garantie, le fabricant s'engage à remplacer et à réparer les pièces défectueuses sans frais pour l'acheteur. Les frais d'assurance et d'expédition ne sont pas couverts et sont à la charge de l'acheteur. Les frais de main-d'oeuvre et les dépenses liées au déplacement, à l'installation, ou au remplacement du produit ou de ses composantes ne sont pas couverts par cette garantie.

Le fabricant se réserve le droit de faire des substitutions de recours en garantie si la pièce n'est pas disponible ou obsolète.

Le fabricant décline toute responsabilité liée à la perte d'utilisation ainsi que tous les autres coûts directs ou indirects, frais, ou dommages encourus par le consommateur qui aurait été causés par une autre utilisation. L'utilisateur assume tous les risques de dommage résultant de l'utilisation de ce produit.

Cette garantie tient lieu expressément de toute autre garantie, exprimée ou implicite, y compris les garanties de qualité marchande ou d'adaptation à un emploi particulier dans la mesure permise par les lois fédérales ou provinciales. Ni le fabricant, ni aucun de ses représentants n'assument aucune autre responsabilité en rapport avec ce produit.

Toute réclamation doit être faite par le détaillant où le produit a été acheté. Une facture ou autre preuve d'achat est nécessaire pour traiter toutes les réclamations de garantie. Le numéro de modèle et les numéros de référence figurant dans les instructions d'assemblage seront exigés lors de la soumission de demande de pièces ou de recours en garantie.

Pour plus d'information ou pour toute question, veuillez téléphoner au 1 (800) 759-0977
Ou, email warranty@bluewaveproducts.com

Blue Wave Products, Inc.
101 N. Raddant Rd
Batavia, IL 60510