7.5’ Patio Umbrella

ASSEMBLY MANUAL



General Guidelines

- Please read the following instructions carefully and use the product accordingly.
- Please keep this manual and hand it over when you transfer the product.
- This summary may not include every detail of all variations and considered steps. Please contact us when further information and help are needed.

Notes

- Personal injury and/or damage to the product may occur if products are used outside of their intended purposes and/or if products have been changed/modified from their original design. The product must be assembled and used in accordance with the provisions of the manual. The seller does not assume any responsibility or liability with respect to any damage caused by incorrect assembly or improper use.
- Carefully check accessories when opening the package. If anything is missing or damaged, please contact us immediately.
- Do not use the parasol without an umbrella stand (NOT included).
- This parasol is only used for shading and decoration purposes.
- Store the parasol in a dry, sheltered place, such as a garage or basement during high winds, rainy days, and the off-season.
- Never force your parasol open. Umbrella mechanics should open gently and easily.
- Do not use sharp tools or equipment such as a knife or scissors when removing the protective material, as it may damage the product.

Warnings

- Keep children away when assembling the product. Small parts are included in the package; they may be fatal if swallowed or inhaled.
- To avoid the potential dangers of suffocation, please keep all parts and packaging (film, plastic bags, foam, etc.) away from babies and children.
- Keep the parasol away from fire; do not use it during extreme cold and heat, and severe weather like rainy, windy, snowy days, and hailstorms, etc.
- When using the tilting mechanism to change the direction, fully press the push-button and do not forcibly adjust it by hand to prevent unnecessary damage.

Daily Maintenance

- Clean the canopy with a soft cloth moistened with a neutral detergent. Store it after completely drying, which will help reduce the growth of mold.
- Do not machine wash, do not dry.
- Do not iron.

Troubleshooting

Problem	Possible Cause	Solution
The umbrella can't close.	The top of the umbrella is in a tilted position.	Adjust the umbrella top to the upright position and then close the umbrella.
The crank does not click and the canopy does not move up when turning the crank handle in the open direction.	The rope is loose and needs to be wound around the crankshaft and stretched.	Keep turning the crank handle in the open direction several turns to wind and stretch the rope until the canopy moves up.
The crank becomes too hard to work.	The rope has come off the pulley.	Slack the rope and put it back onto the pulley.

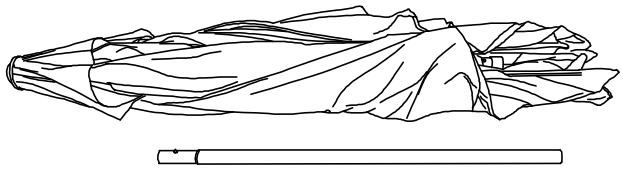

①

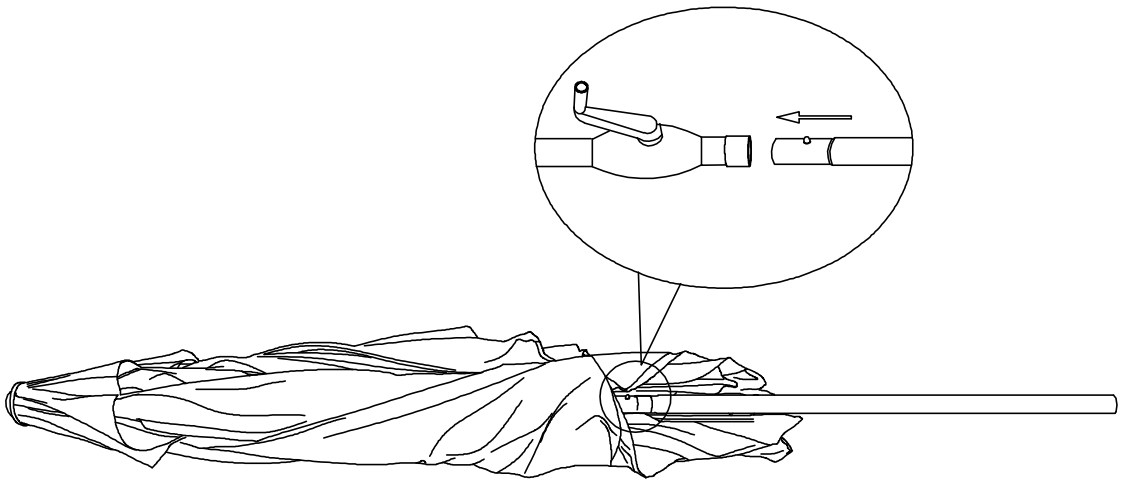

CAUTION:

Please pull and loosen the umbrella ribs by hand, so they're not entangled, before attempting to open the umbrella by crank.

②

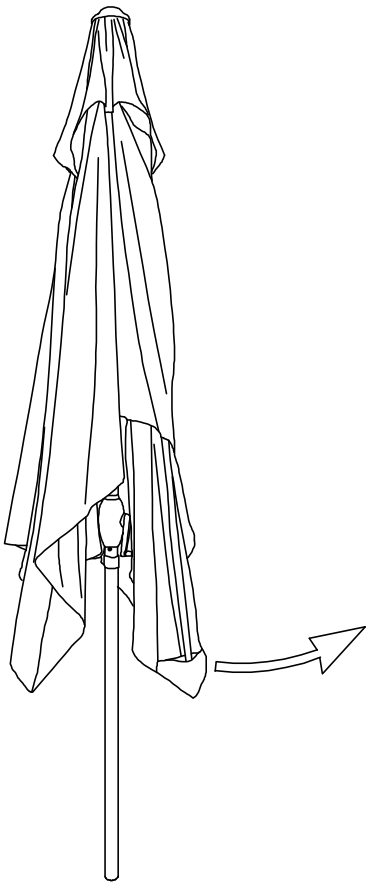

③

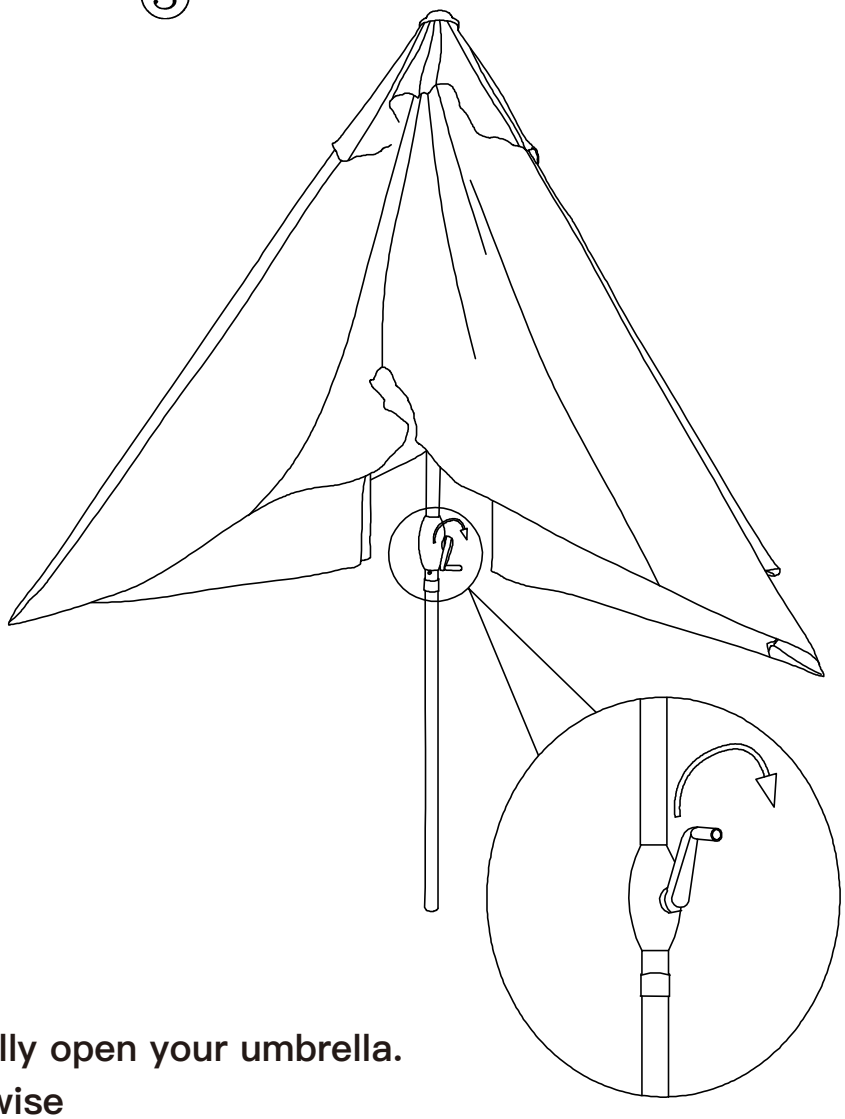

Turn crank clockwise to fully open your umbrella.

To fold up,turn anti-clockwise

④

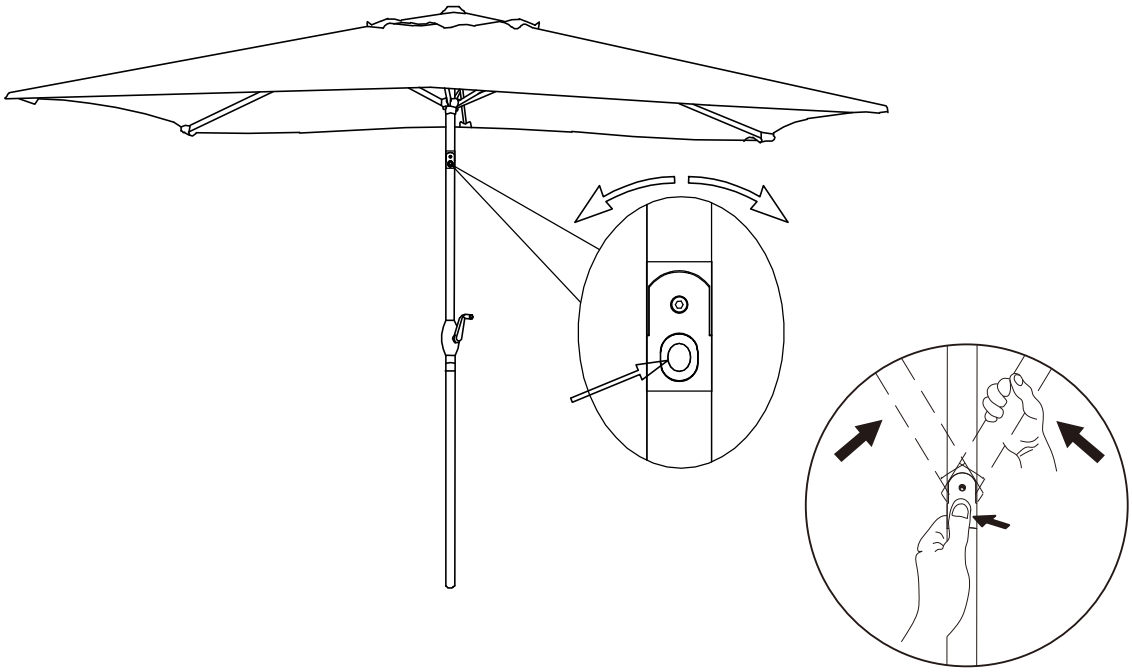

Push button tilt for more angles of shading

⑤

