Reception Desk Assembly Guide (120-150cm/47-59inch)

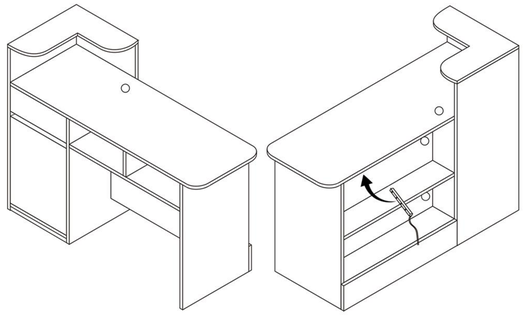

2-in-1 connector*100 sets

14-inch three-section track*1 pair

Self-tapping screw*20pcs

Hole cover*100pcs

Cover-less hinge*2pcs

Wire cover*1pc

Light strip*2pcs

2-in-1 User Manual

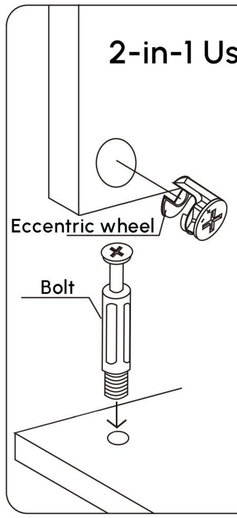

1.Screw the bolt into the pre-drilled hole.

2.Insert the installed bolt into the other panel's corresponding hole, then install the eccentric wheel. Align the cross arrow on it with the panel's side hole during installation.

3.Tighten the eccentric wheel clockwise with a cross screwdriver.

Instructions for Slide

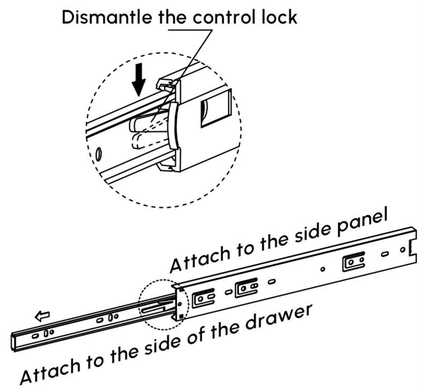

Hinge Usage Instructions

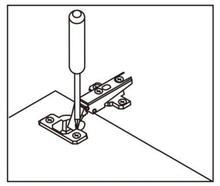

Install hinge on the door

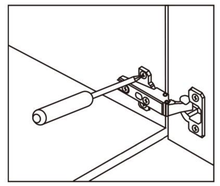

Attach the hinge to the cabinet

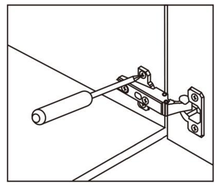

Up-down height adjustment

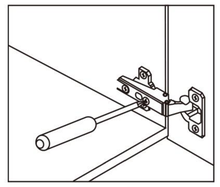

Door gap adjustment

Step 1

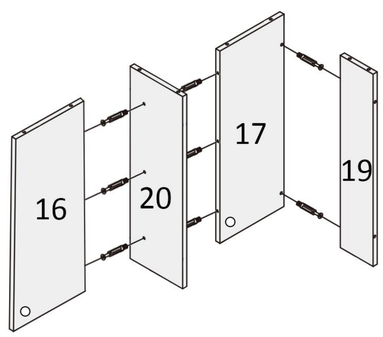

Step 2

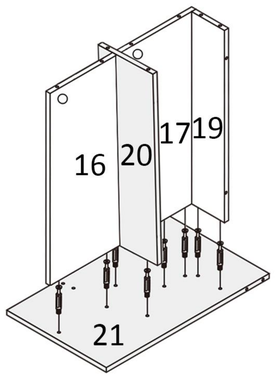

Step 3

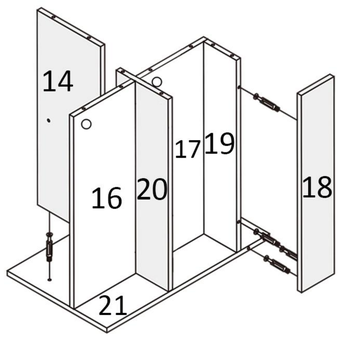

Step 4

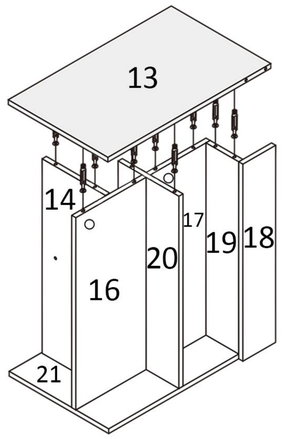

Step 5

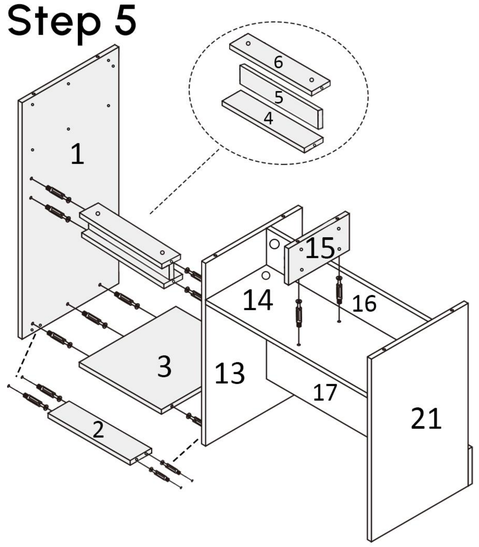

Step 6

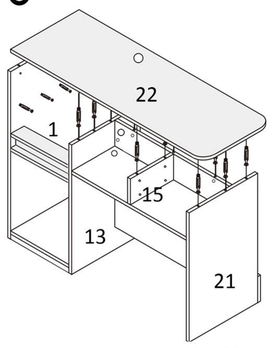

Align the three side holes of the No. 22 desktop panel with the black bolts of the No. 1 side panel and insert them. Then align the black bolts under the desktop panel with the corresponding holes and insert them. Note: Make sure the holes are aligned and press to fix the desktop panel.

Step 7

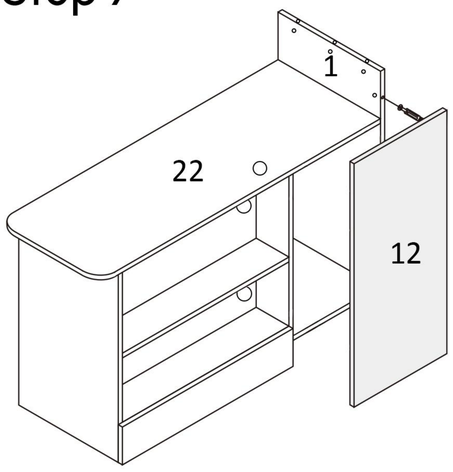

Step 8

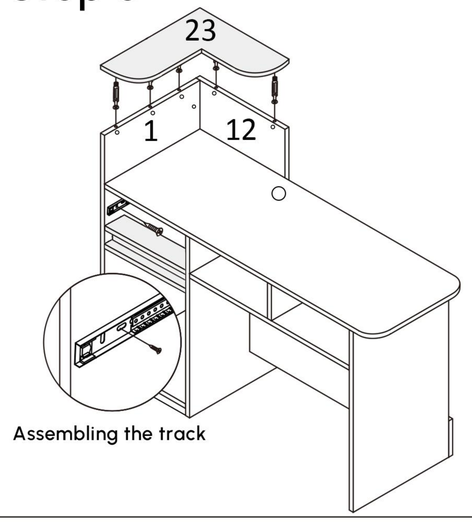

Assembling the track

Step 9

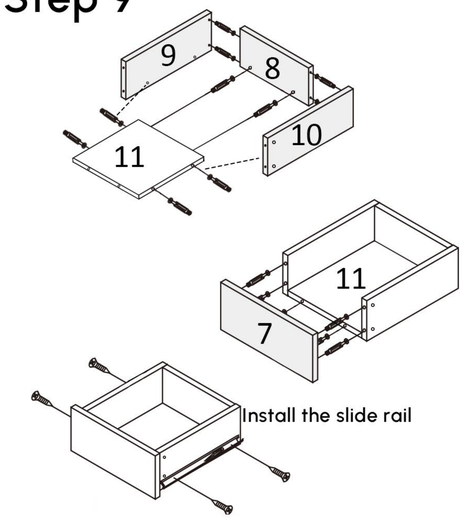

Install the slide rail
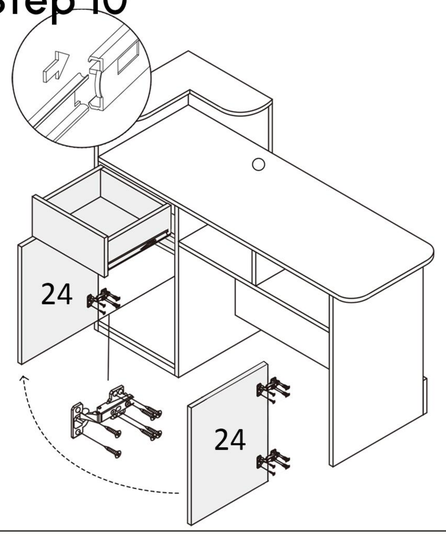
Step 10