ASSEMBLY INSTRUCTION

Bathroom Vanity



Thank you for purchasing this quality product. Be sure to check all packing material carefully for small parts which may have come loose inside the carton during shipment. Separate, identify and count all parts and hardware. Compare with the parts list to be sure all parts are present.
"DO NOT TIGHTEN SCREWS UNTIL COMPLETELY ASSEMBLED"

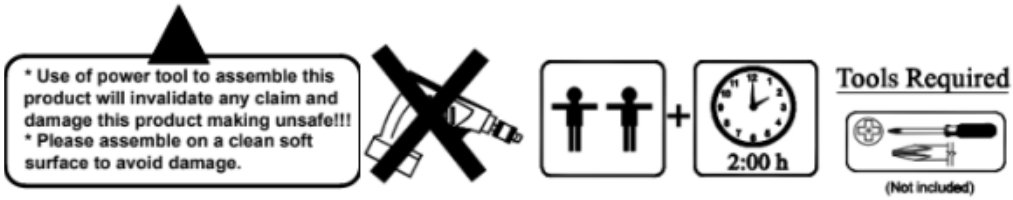

IMPORTANT:
PLEASE READ INSTRUCTION BEFORE STARTING THE ASSEMBLY

ASSEMBLY INSTRUCTION

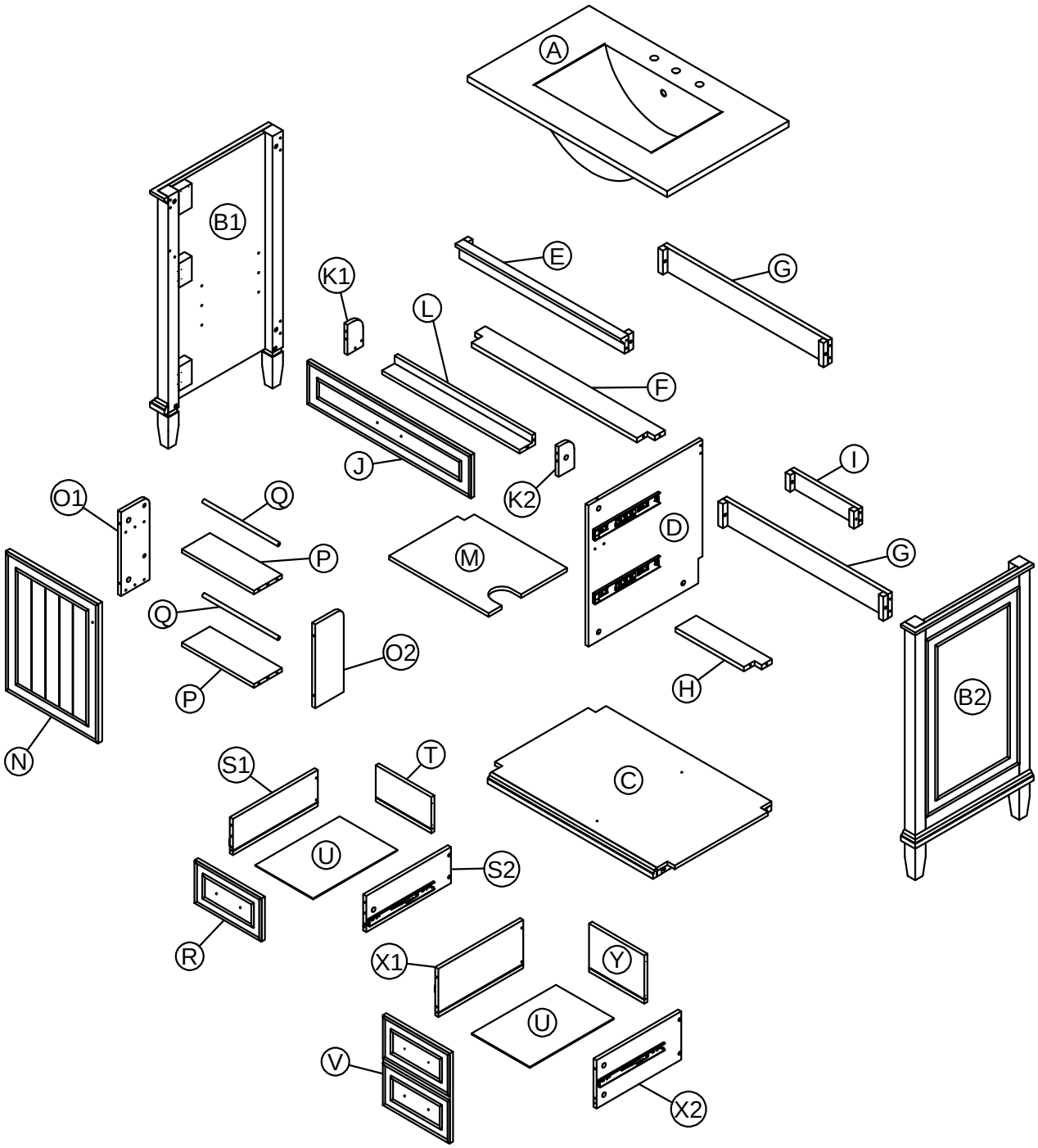

PACKAGE CONTENTS

(A) x 1 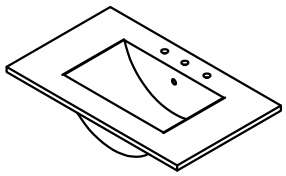 Sink	(G) x 2 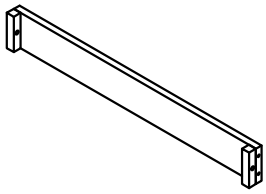 Back Bar
(B1) x 1 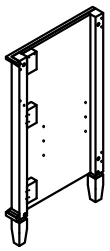 Left Side Board	(H) x 1 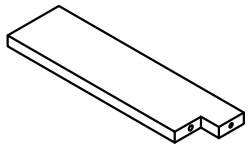 Right Side Front Bar
(B2) x 1 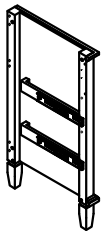 Right Side Board	(I) x 1 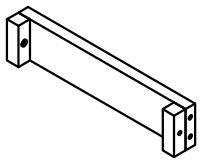 Right Side Back Bar
(C) x 1 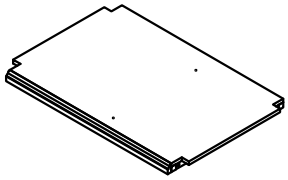 Bottom Panel	(J) x 1 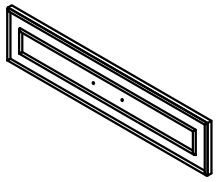 Flip Down Panel
(D) x 1 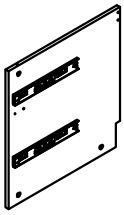 Middle Panel	(K1) x 1 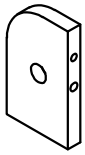 Left Side of Flip Down Panel
(E) x 1 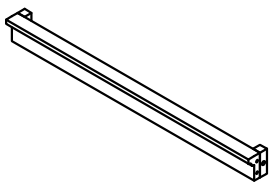 Upper Front Bar	(K2) x 1 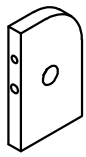 Right Side of Flip Down Panel
(F) x 1 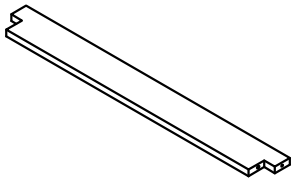 Lower Front Bar	(L) x 1 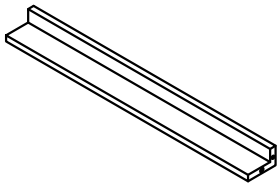 Bottom of Flip Down Panel

PACKAGE CONTENTS

(M) x 1 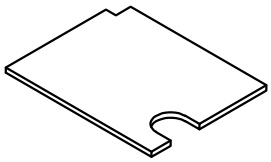 Adjustable Shelf	(S1) x 1 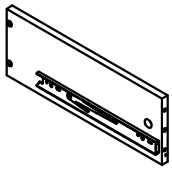 Upper Drawer Left Side Panel
(N) x 1 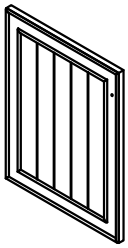 Left Door	(S2) x 1 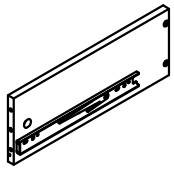 Upper Drawer Right Side Panel
(O1) x 1 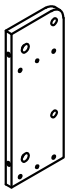 Left Side Panel of Door Shelf	(T) x 1 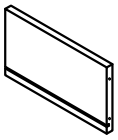 Upper Drawer Back Side Panel
(O2) x 1 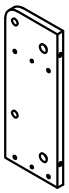 Right Side Panel of Door Shelf	(U) x 2 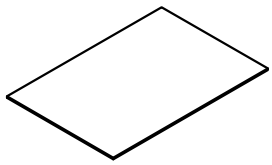 Drawer Bottom Panel
(P) x 2 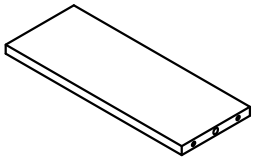 Bottom Panel of Door Shelf	(V) x 1 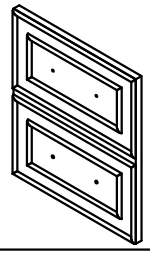 Lower Drawer Front Panel
(Q) x 2 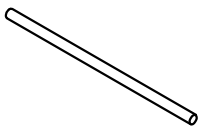 Bar of Door Shelf	(X1) x 1 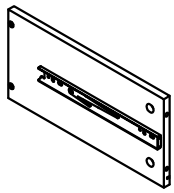 Lower Drawer Left Side Panel
(R) x 1 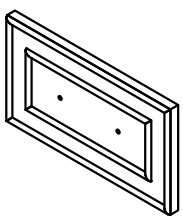 Upper Drawer Front Panel	(X2) x 1 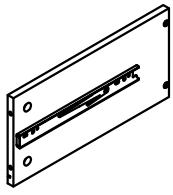 Lower Drawer Right Side Panel

PACKAGE CONTENTS

Ⓨ x 1

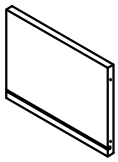

Lower Drawer Back Side Panel

1	2	3	4
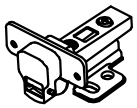 Hinge 2PCS	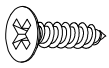 Ø4x15mm 12PCS	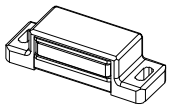 2PCS	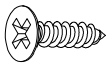 Ø3x15mm 4PCS
5	6	7	8
 2PCS	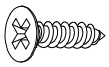 Ø3x10mm 4PCS	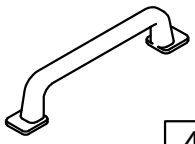 4PCS	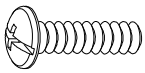 M4x20 mm 9PCS
9	10	11	12
 Ø15x9mm 25PCS	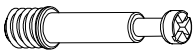 Ø6 x35 mm 25PCS	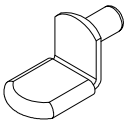 4PCS	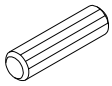 Ø6 x30 mm 36PCS
13	14	15	16
 Knob 1PCS	 Ø4x25mm 10PCS	 Left 1PC	 Right 1PC
17	18	19	20
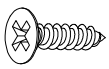 Ø3.5x15mm 6PCS	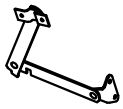 1PC	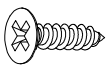 Ø3.5x12mm 4PCS	 M6x35mm 10PCS
21	22	23	
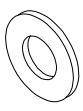 Ø6x16mm 10PCS	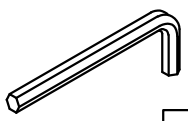 1PC	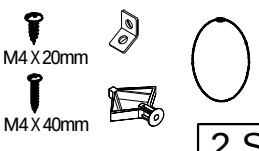 2 Sets	

ASSEMBLY TOOLS REQUIRED (NOT INCLUDED)



STEP 1

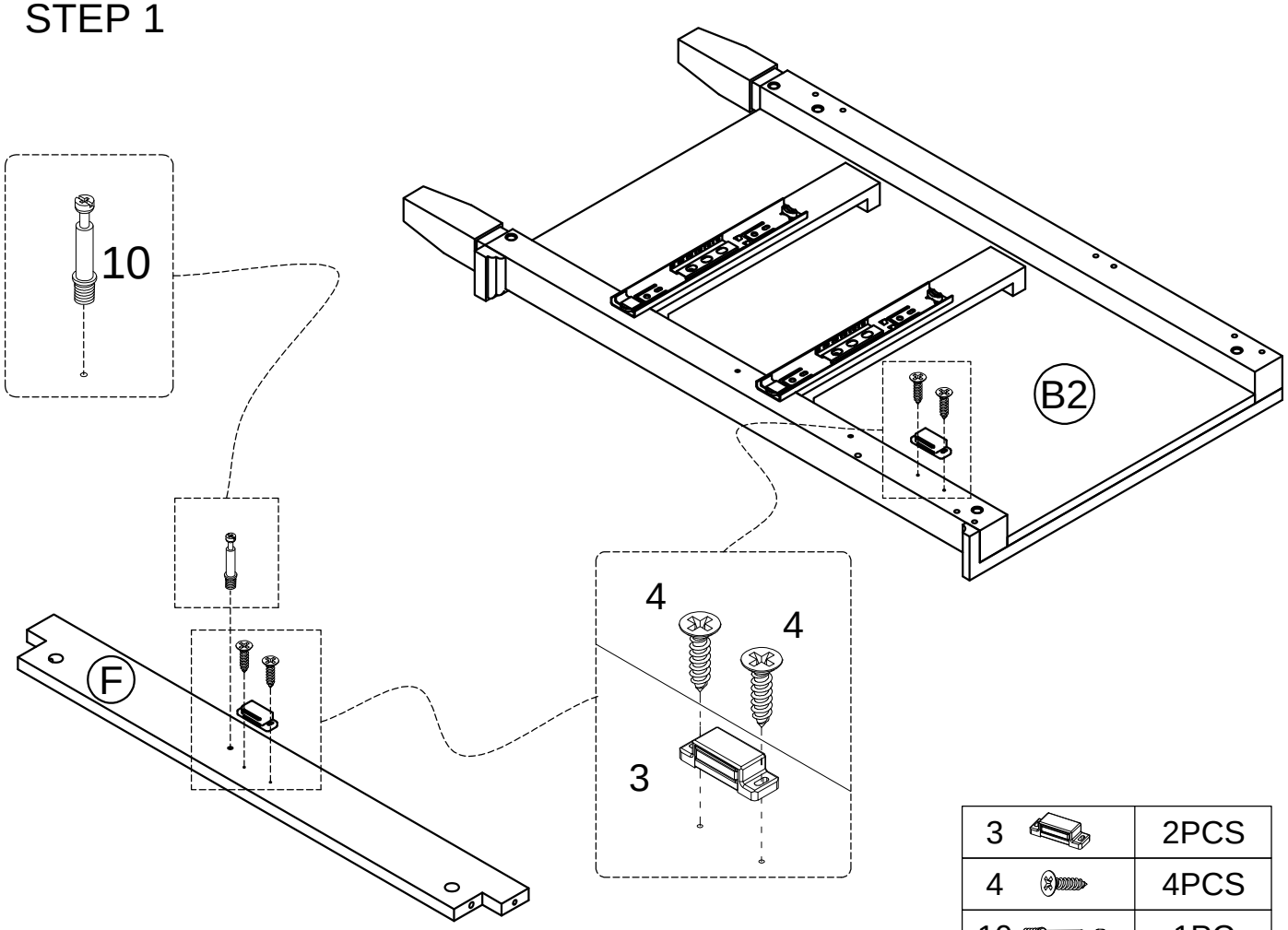

3	2PCS
4	4PCS
10	1PC

STEP 2

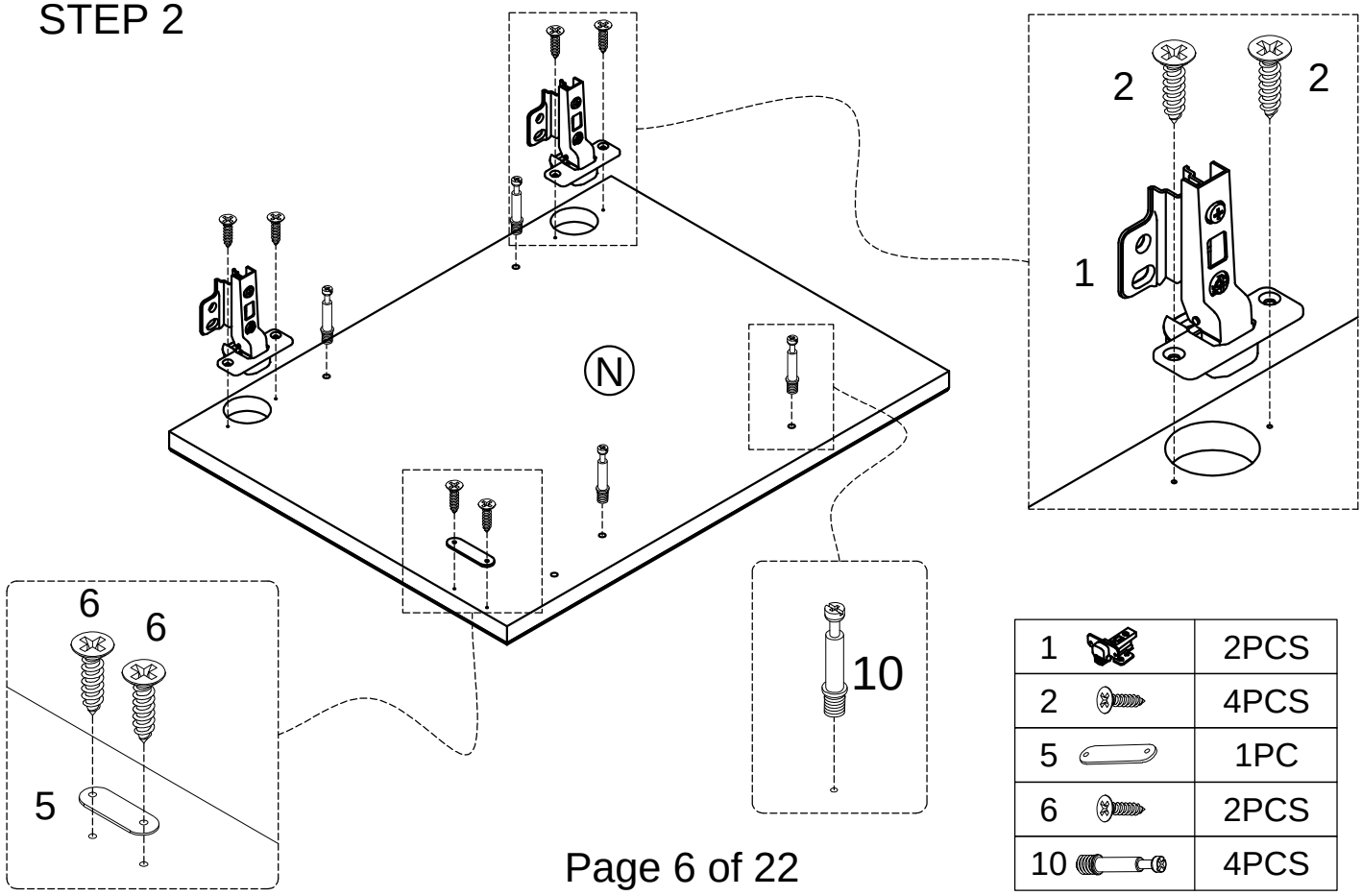

1	2PCS
2	4PCS
5	1PC
6	2PCS
10	4PCS

STEP 3

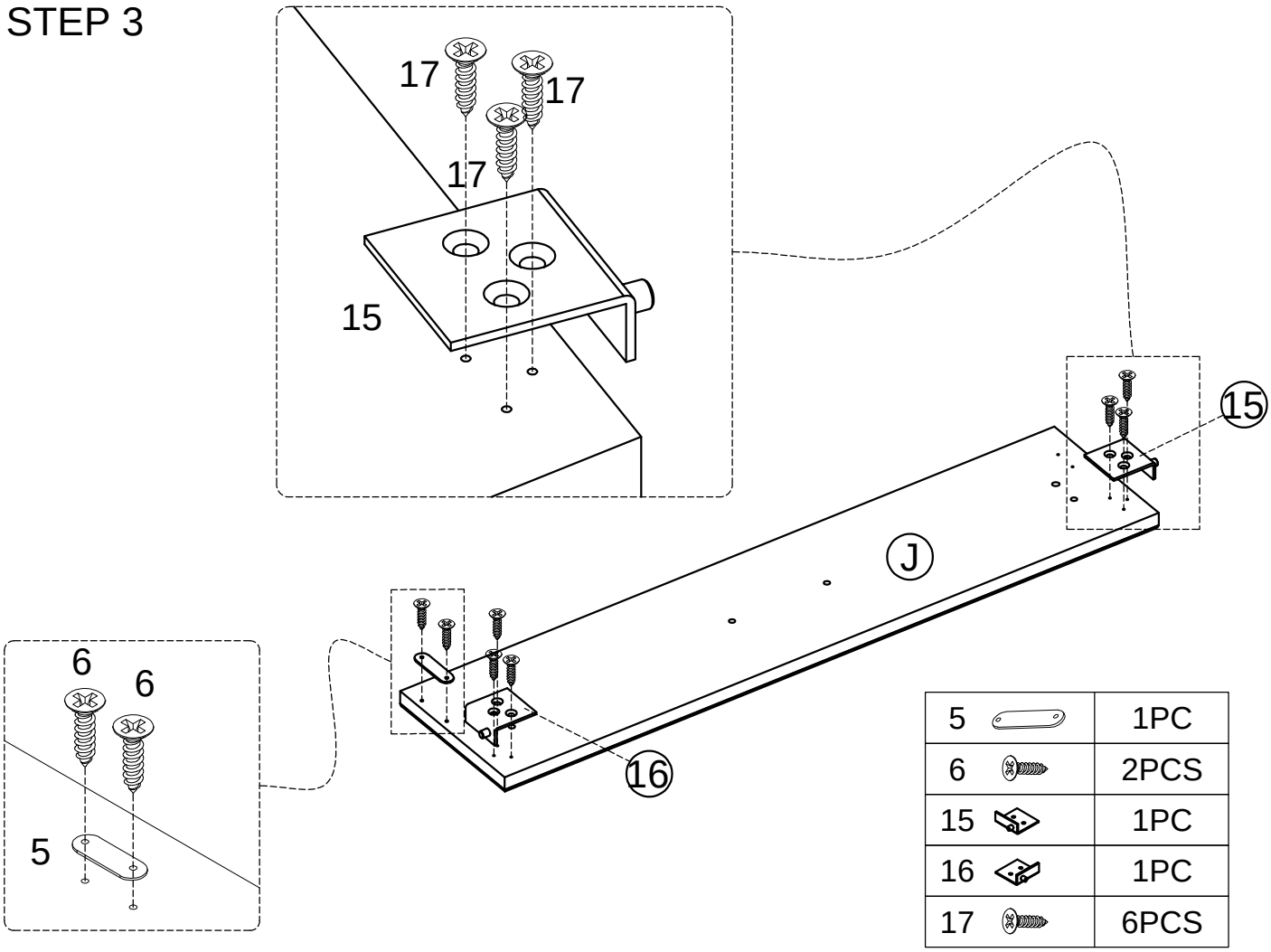

5	1PC
6	2PCS
15	1PC
16	1PC
17	6PCS

STEP 4

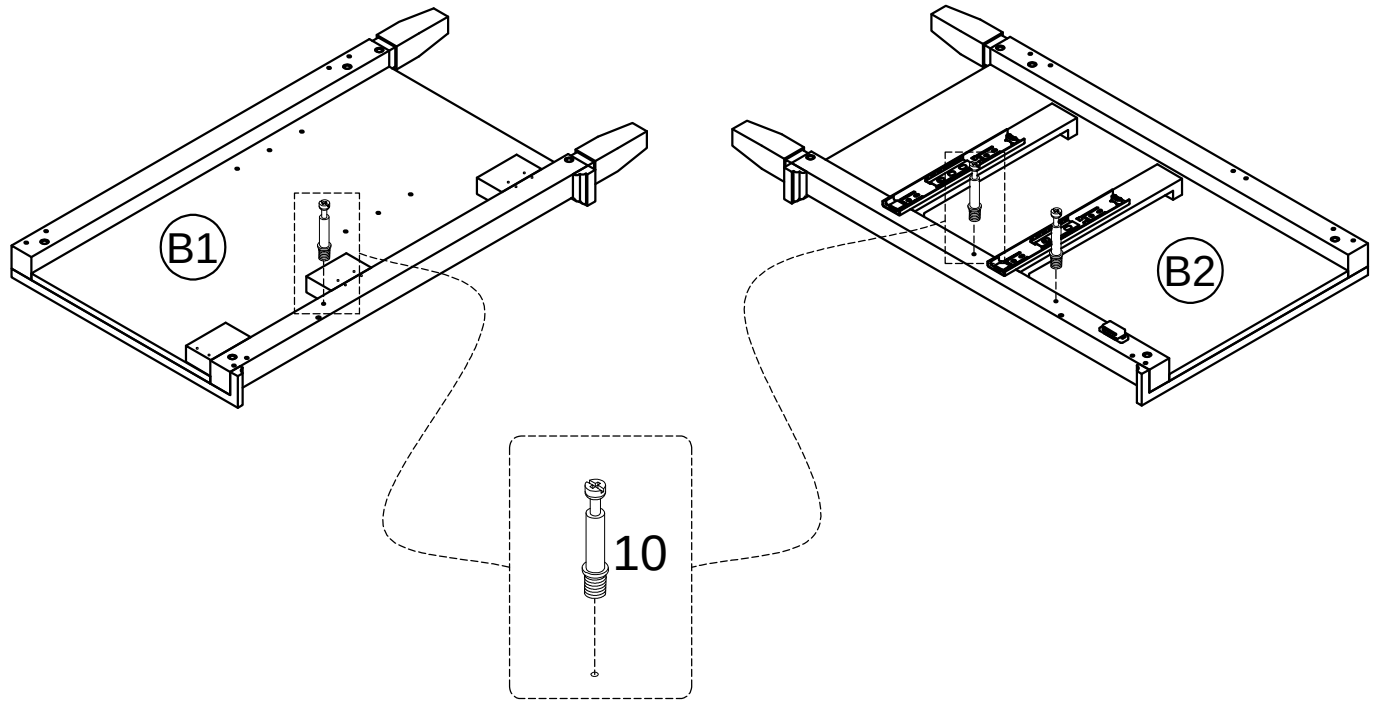

10	3PCS

STEP 5

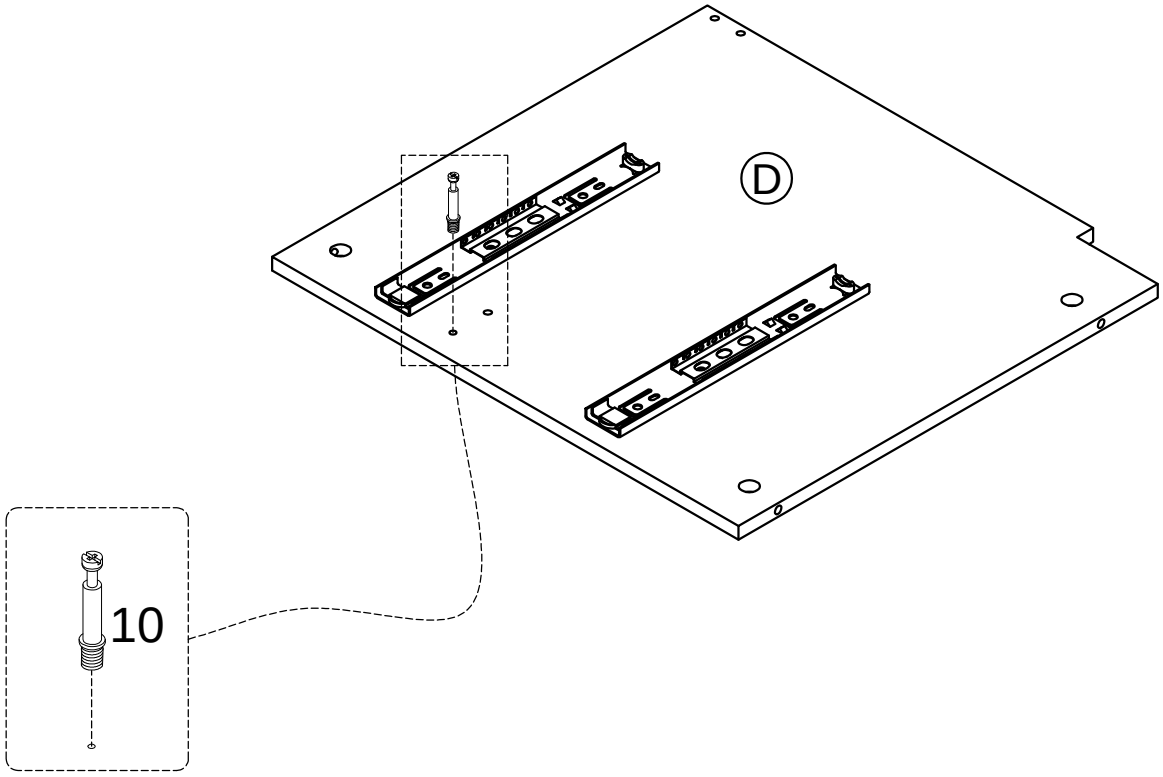

10 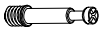	1PC

STEP 6

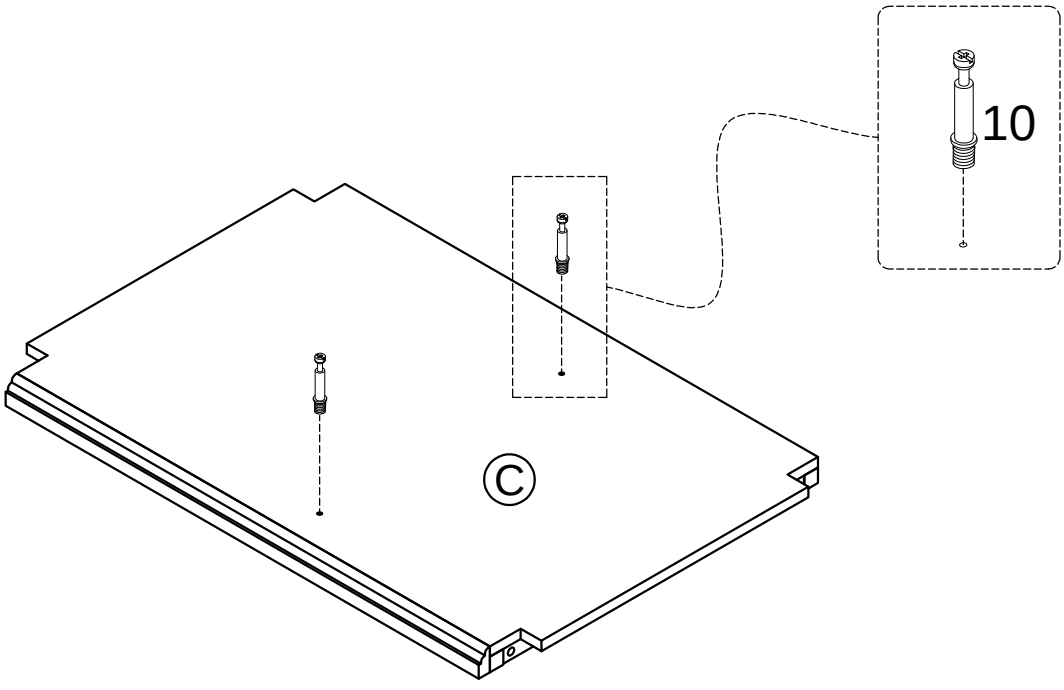

10 	2PCS

STEP 7

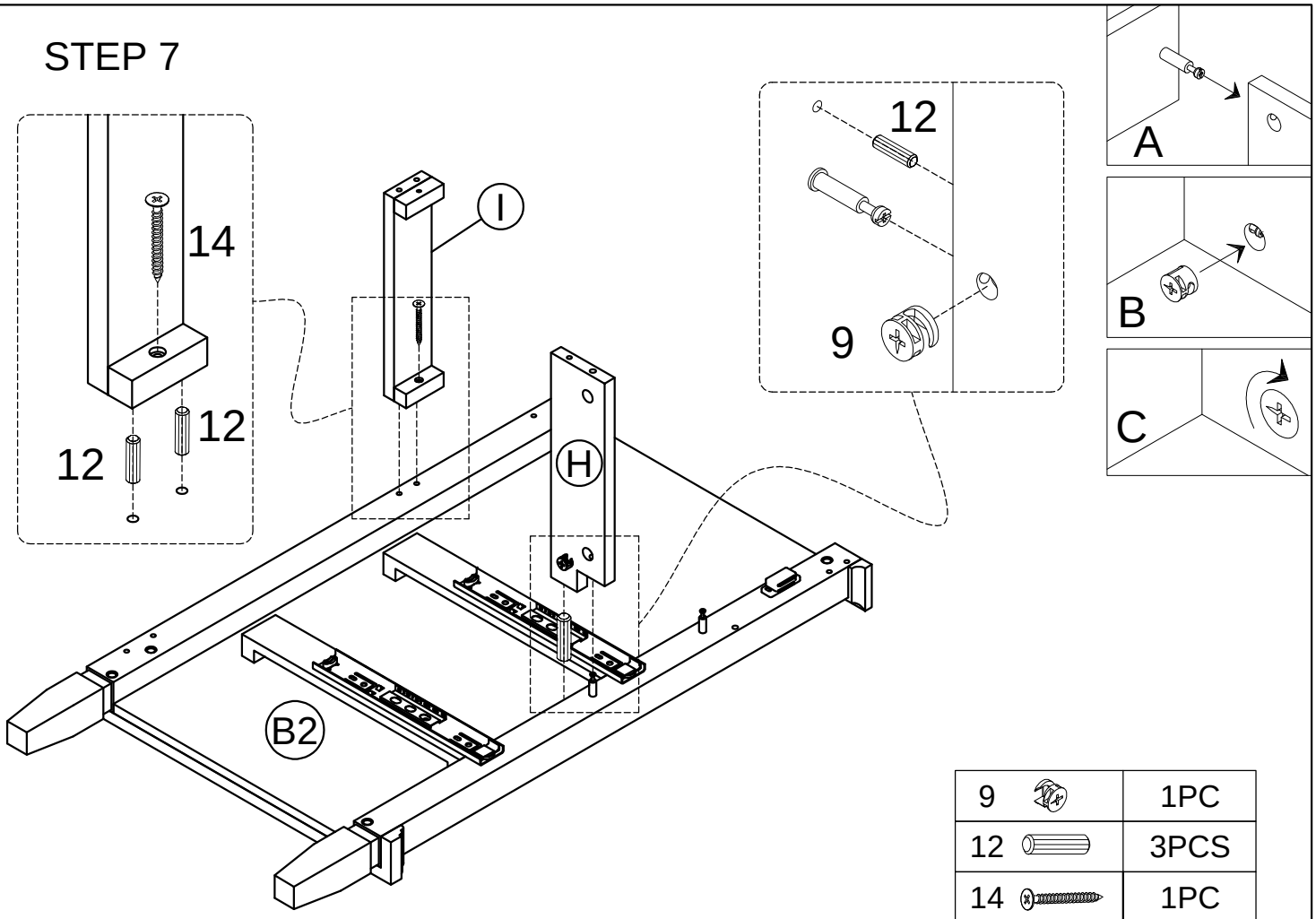

9	1PC
12	3PCS
14	1PC

STEP 8

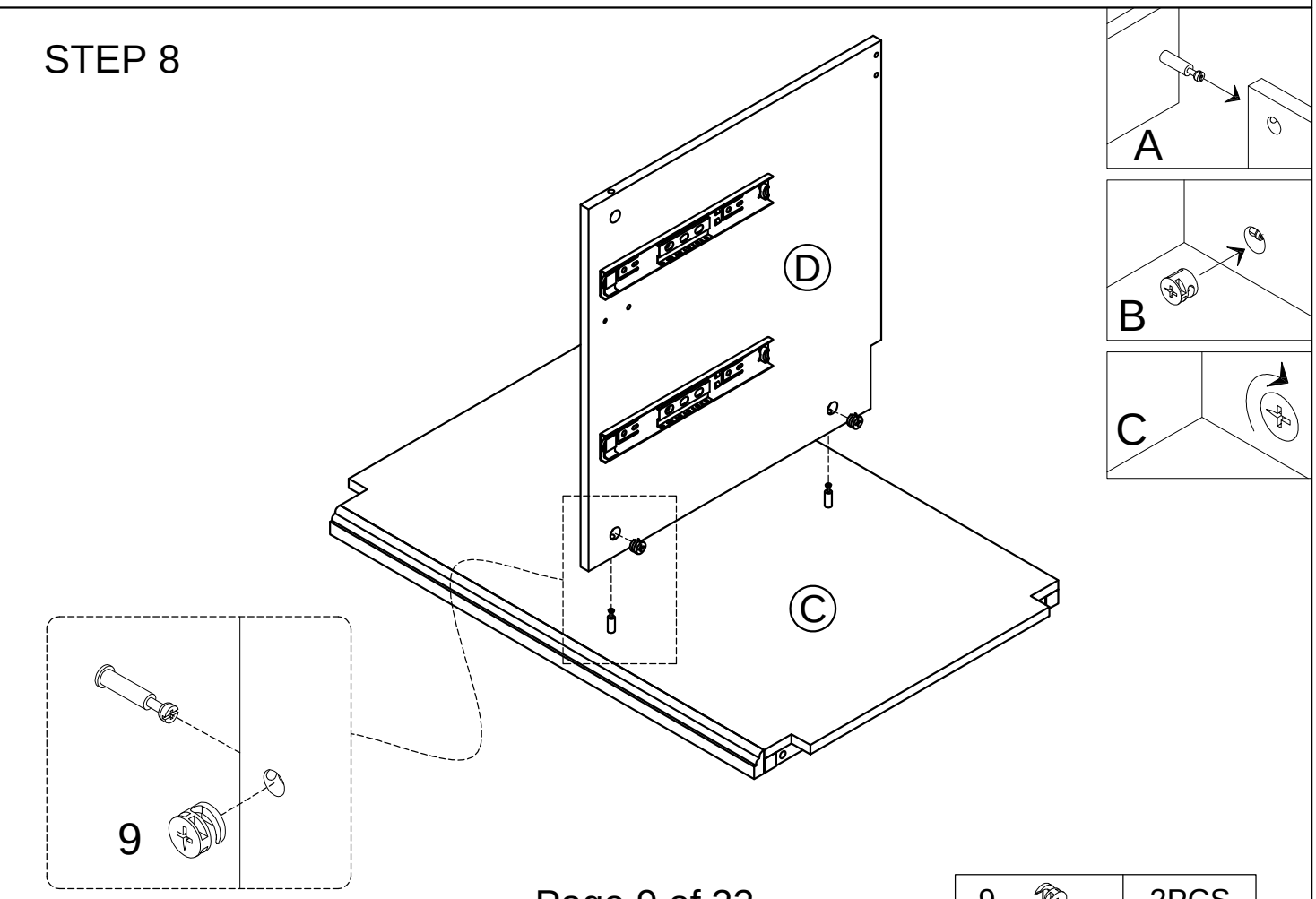

9	2PCS

STEP 9

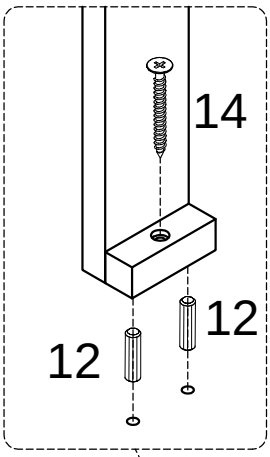

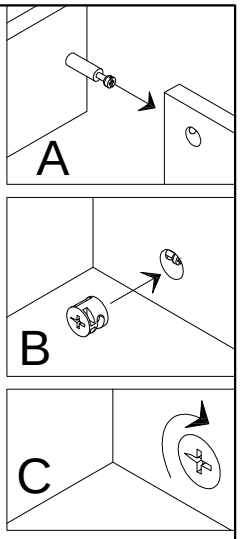

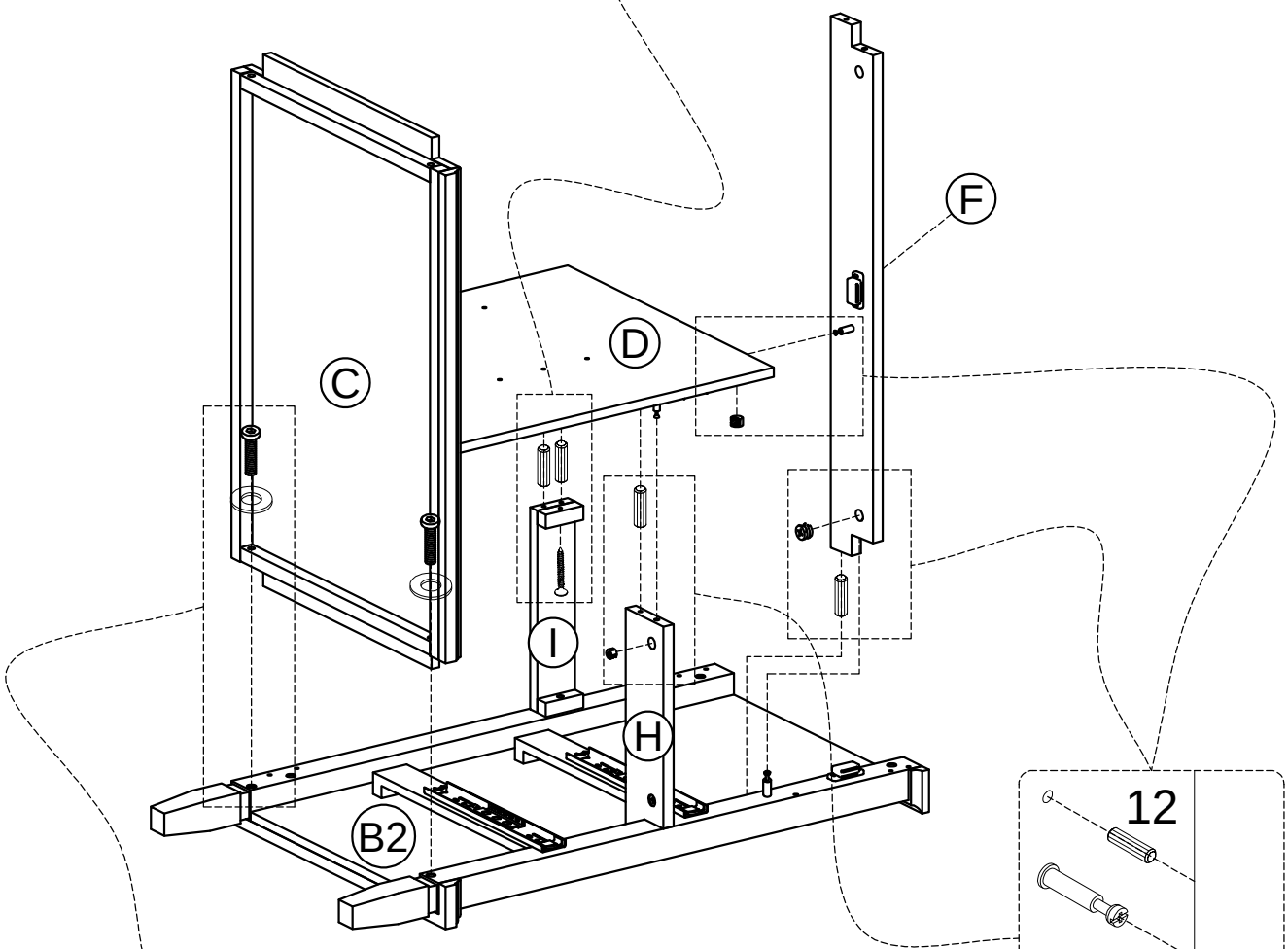

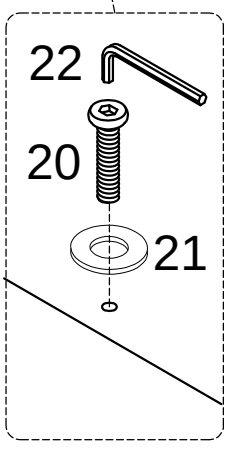

9	3PCS
12	4PCS
14	1PC
20	2PCS
21	2PCS
22	1PC

STEP 10

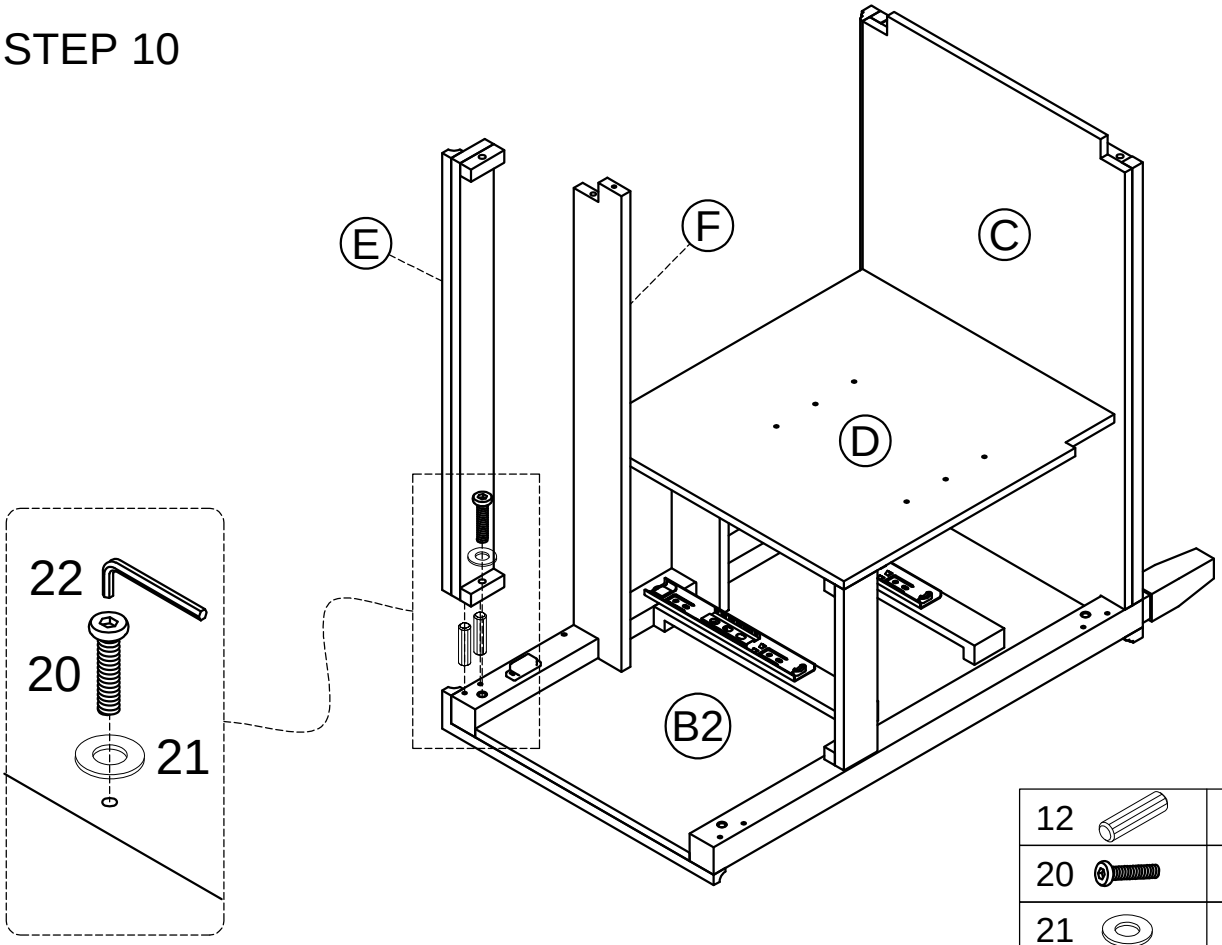

12	2PCS
20	1PC
21	1PC
22	1PC

STEP 11

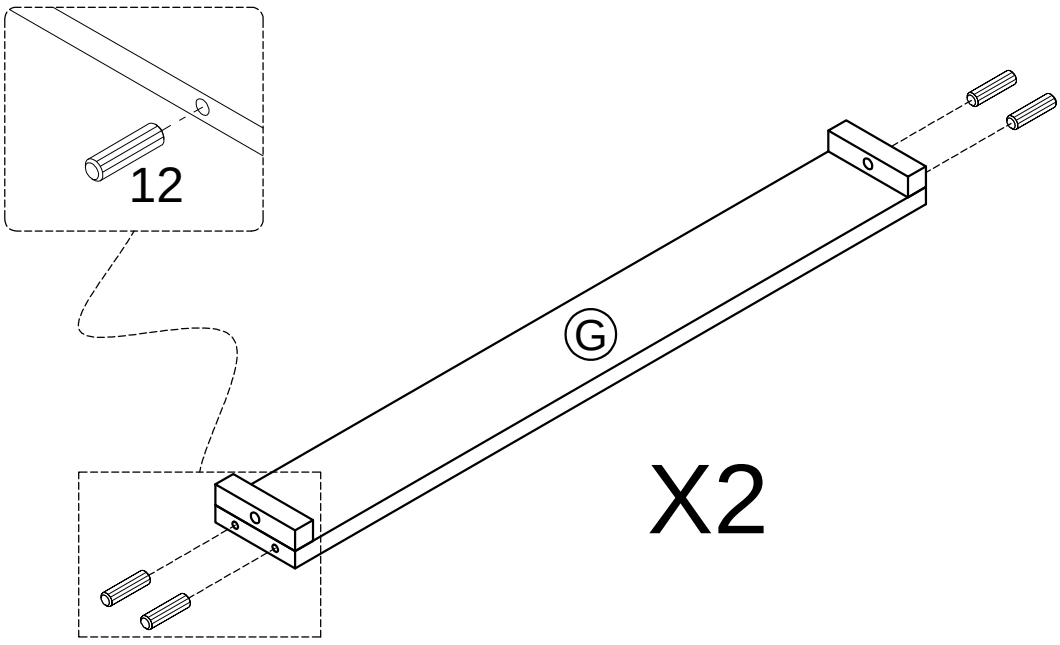

12	8PCS

STEP 12

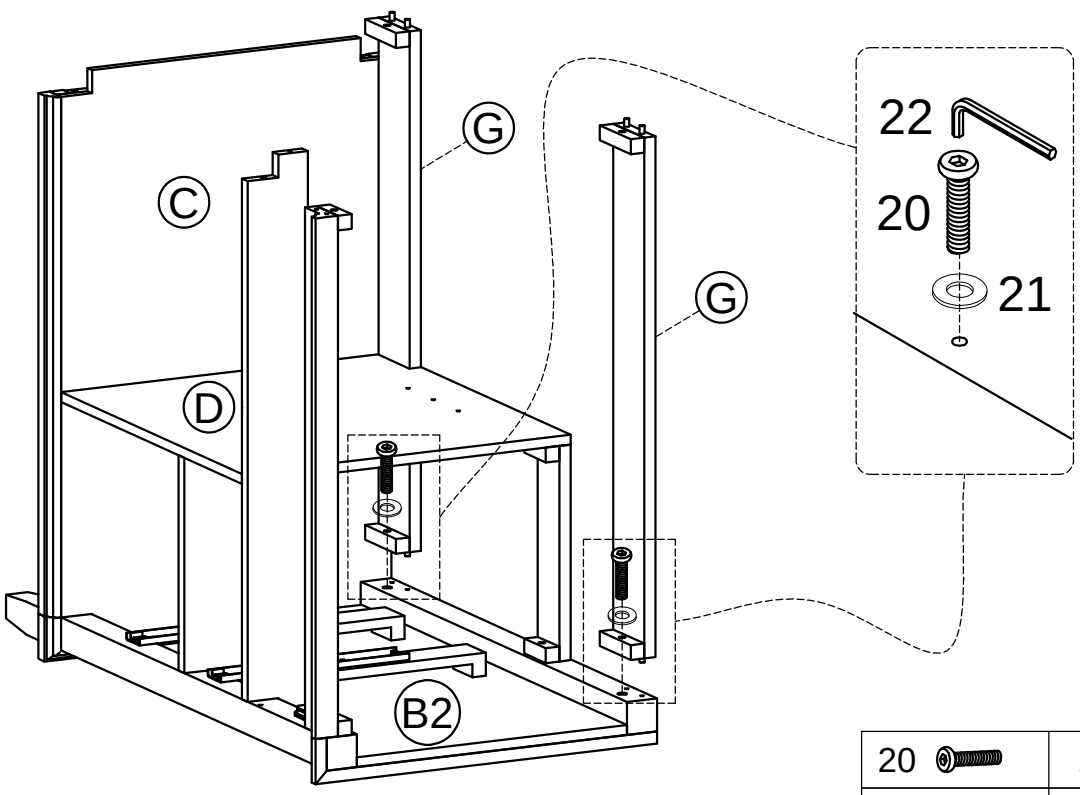

20	2PCS
21	2PCS
22	1PC

STEP 13

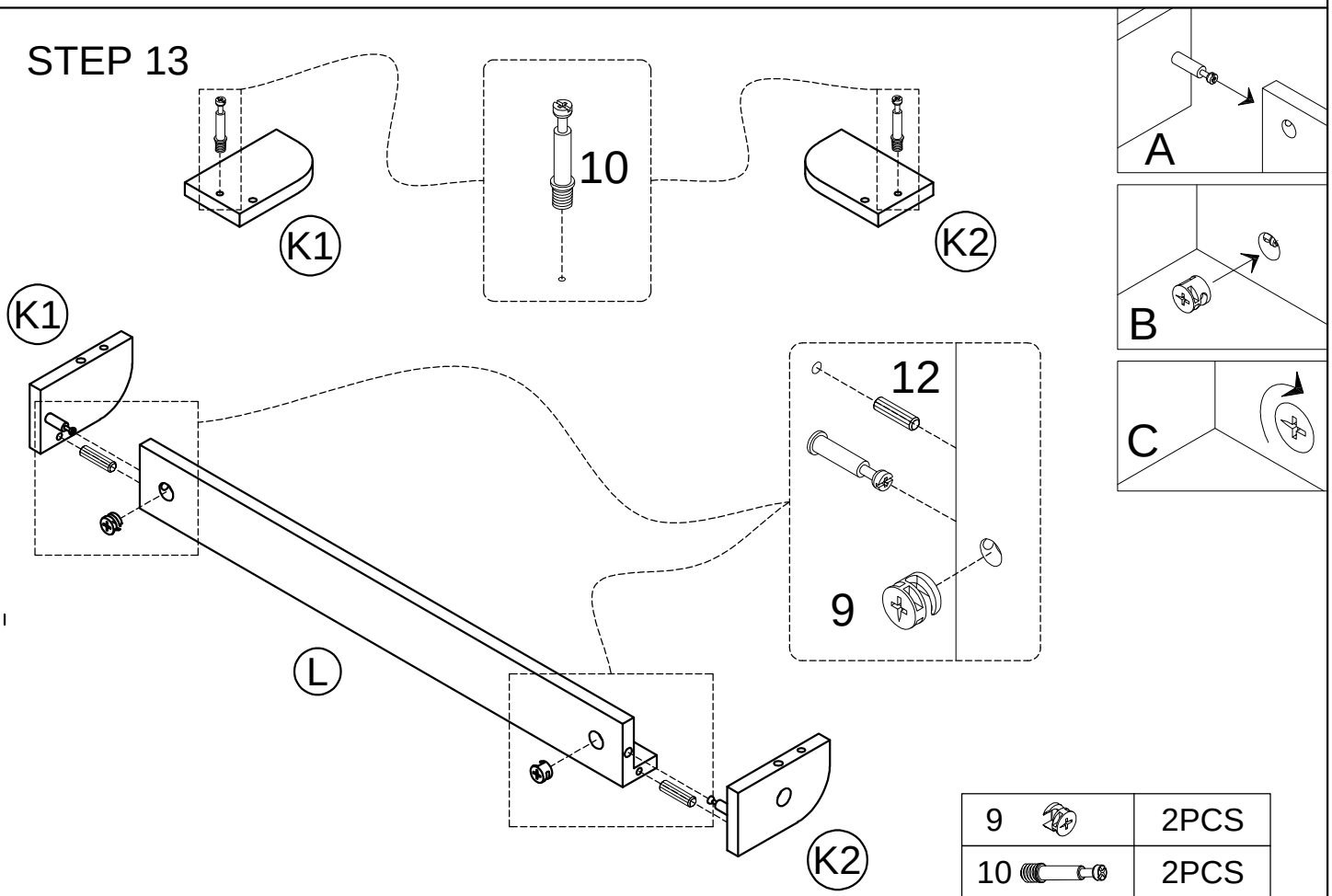

9	2PCS
10	2PCS
12	2PCS

STEP 14

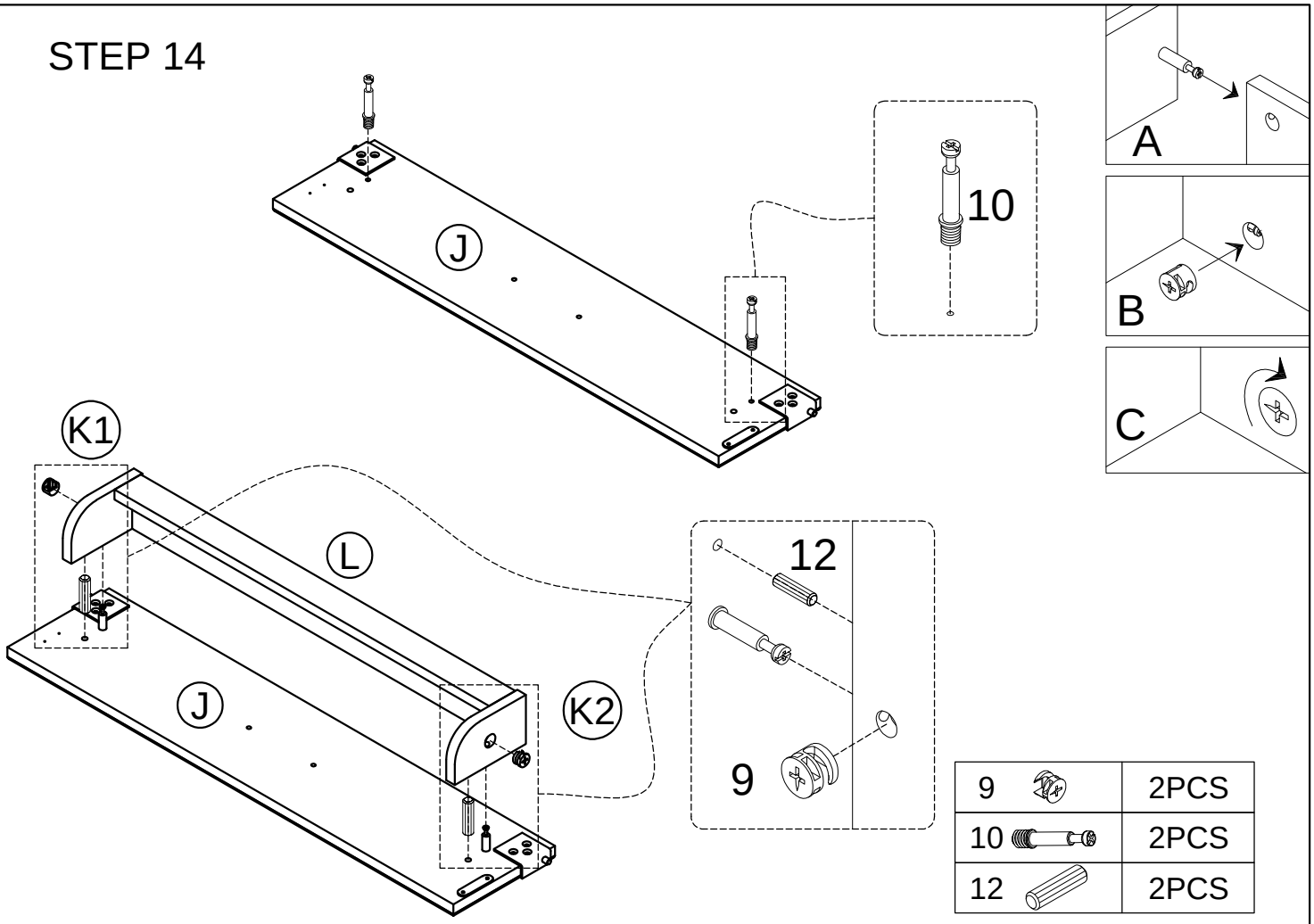

9	2PCS
10	2PCS
12	2PCS

STEP 15

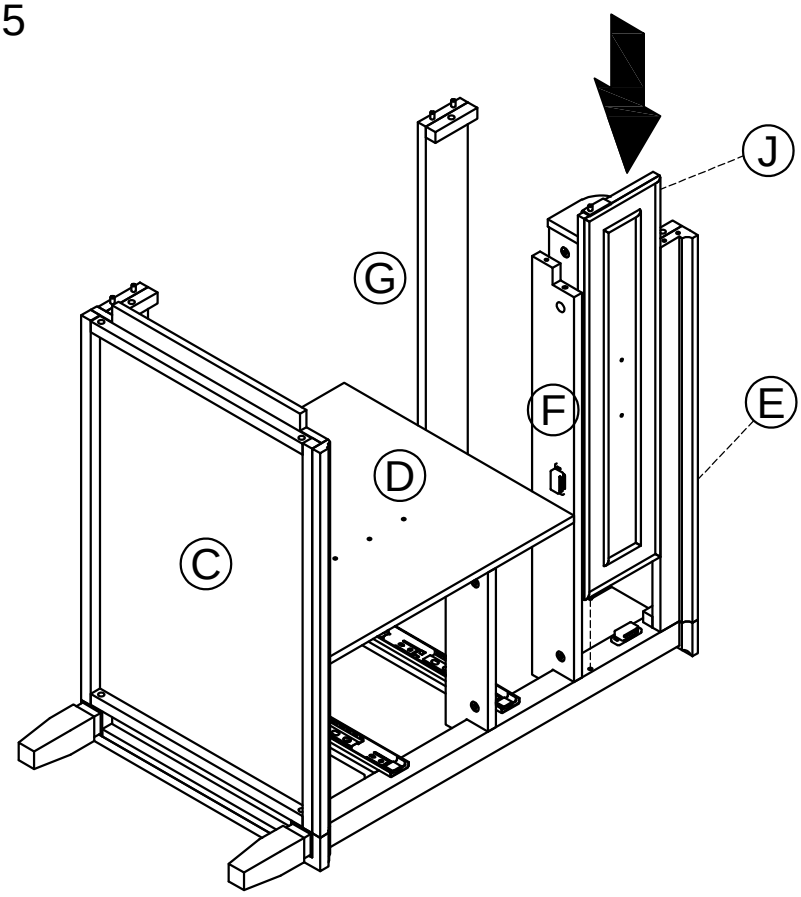

STEP 16

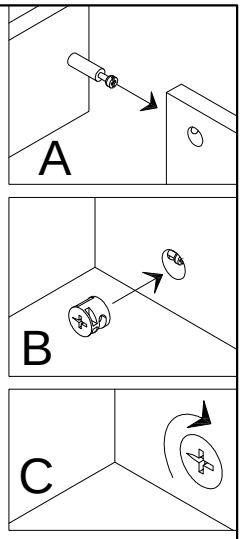

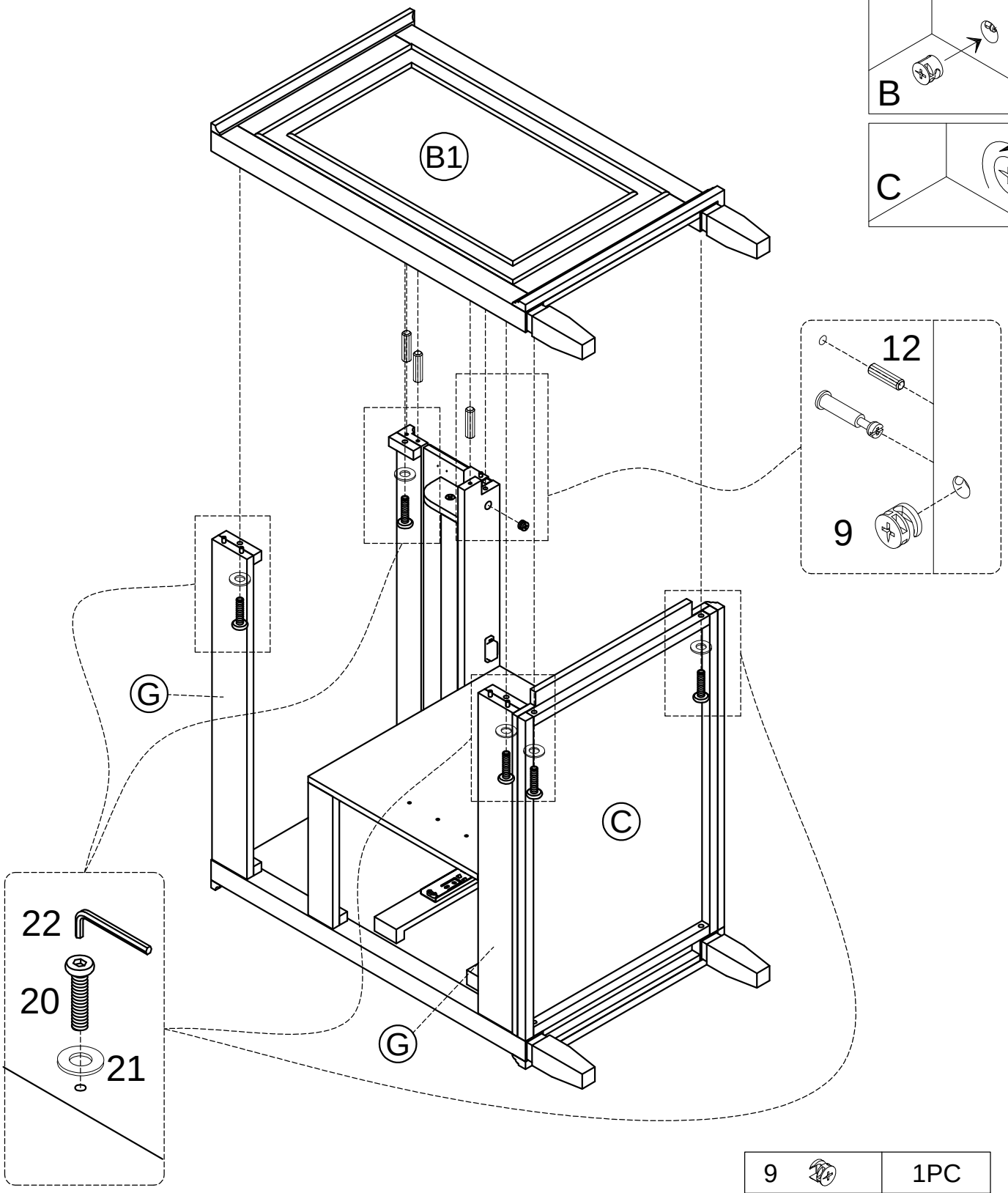

9	1PC
12	3PCS
20	5PCS
21	5PCS
22	1PC

STEP 17

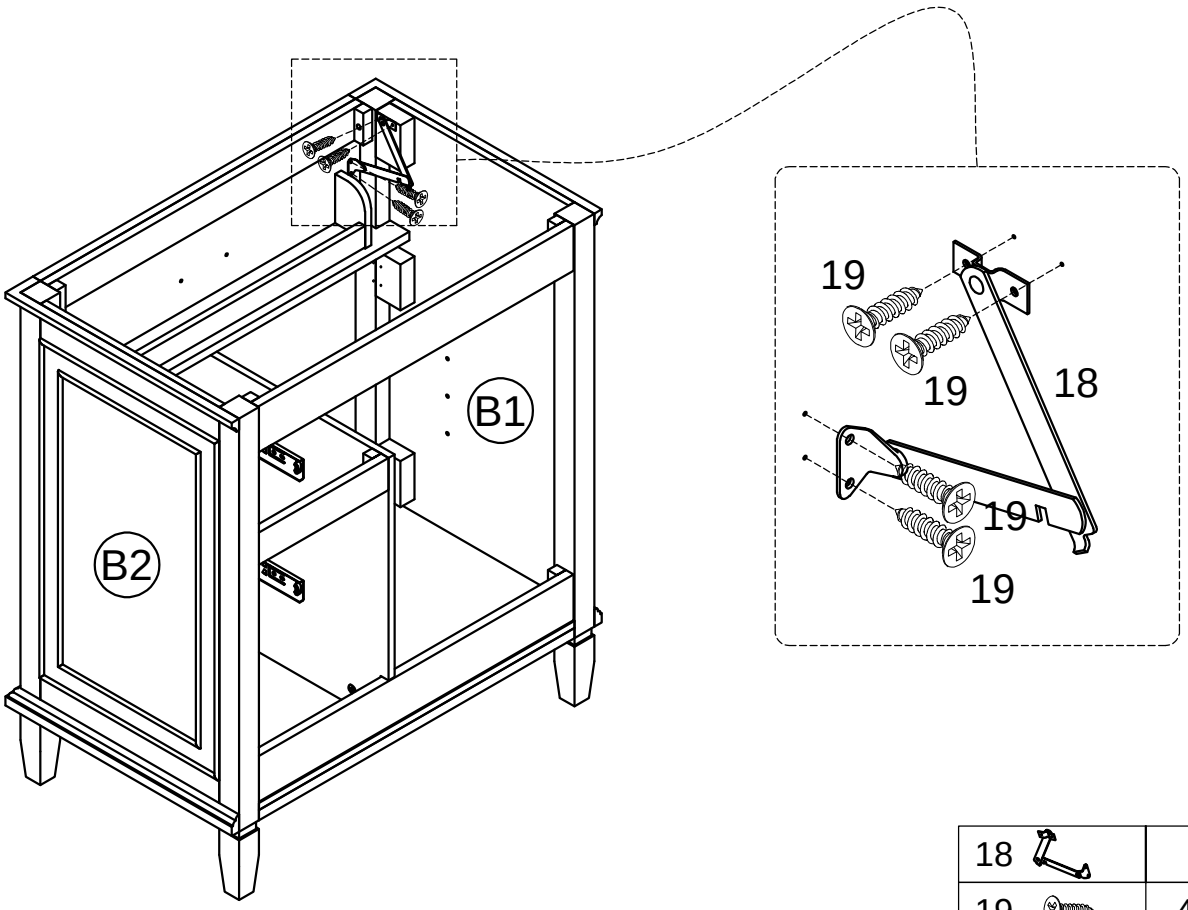

18	1PC
19	4PCS

STEP 18

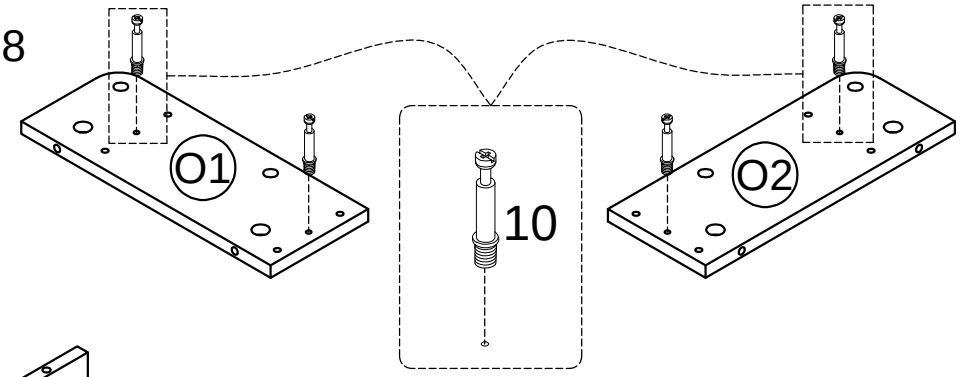

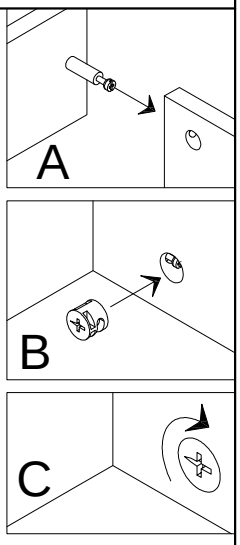

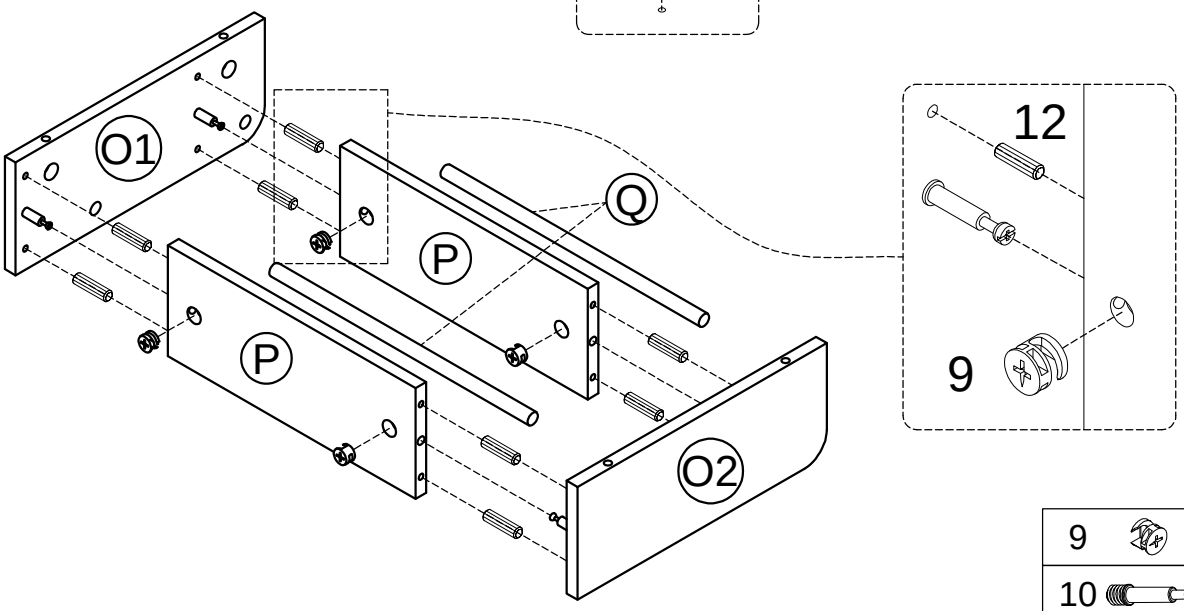

9	4PCS
10	4PCS
12	8PCS

STEP 19

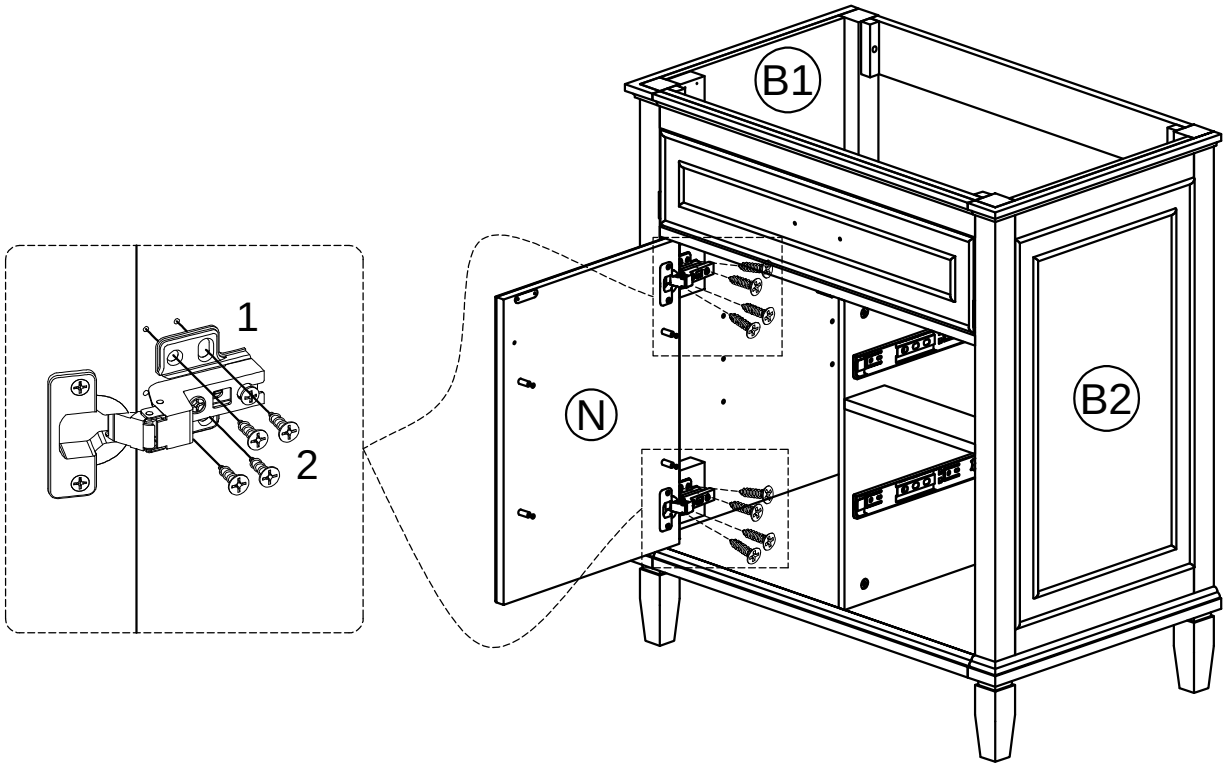

2		8PCS

STEP 20

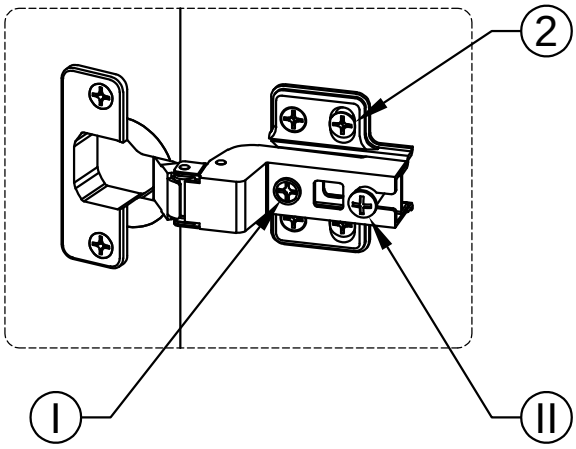

Tighten the Screw marked Ⅱ to fasten hinge. The door may need to be adjusted so that all the spaces between the door and the unit sides are equal.
To adjust, follow instructions:

1. Side adjustment 4 mm
   To move the door towards the side panel, loosen screw Ⅰ and tighten screw Ⅱ .
   To move the door away from the side panel, loosen screw Ⅱ and tighten screw Ⅰ .
2. Depth adjustment 4 mm
   Loosen screw Ⅱ (just one turn), adjust door to desired position, re-tighten screw .
3. Height adjustment
   Loosen screw ② , adjust door to desired position, re-tighten screw .

STEP 21

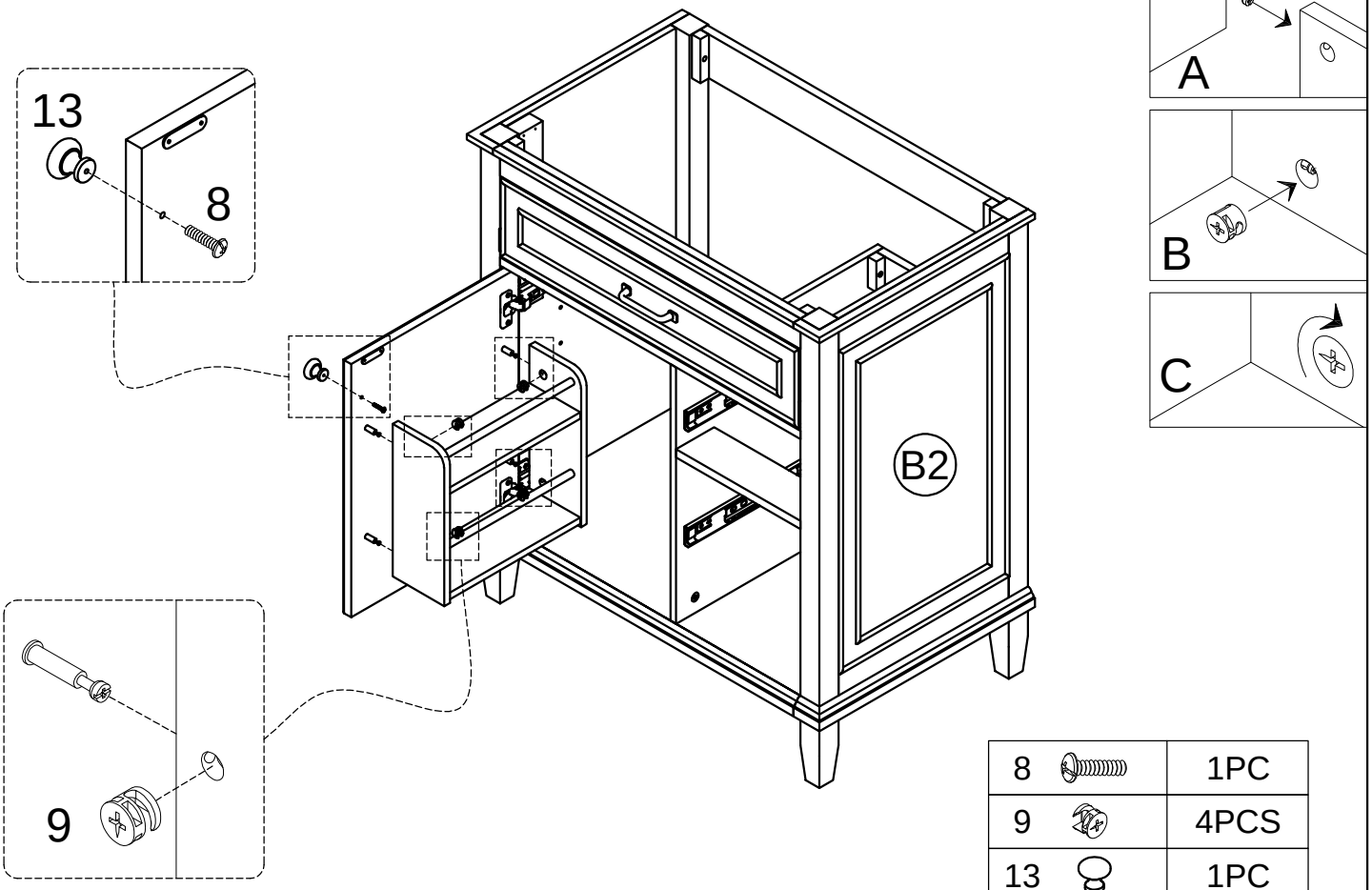

8	1PC
9	4PCS
13	1PC

STEP 22

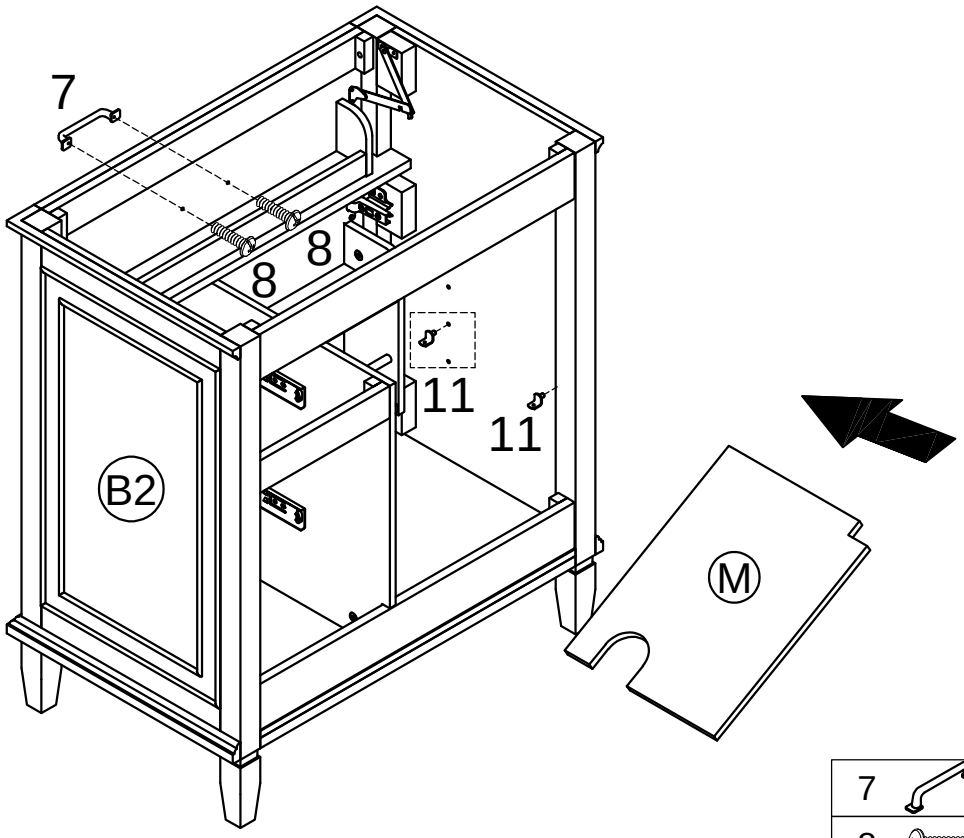

7	1PC
8	2PCS
11	4PCS

STEP 23

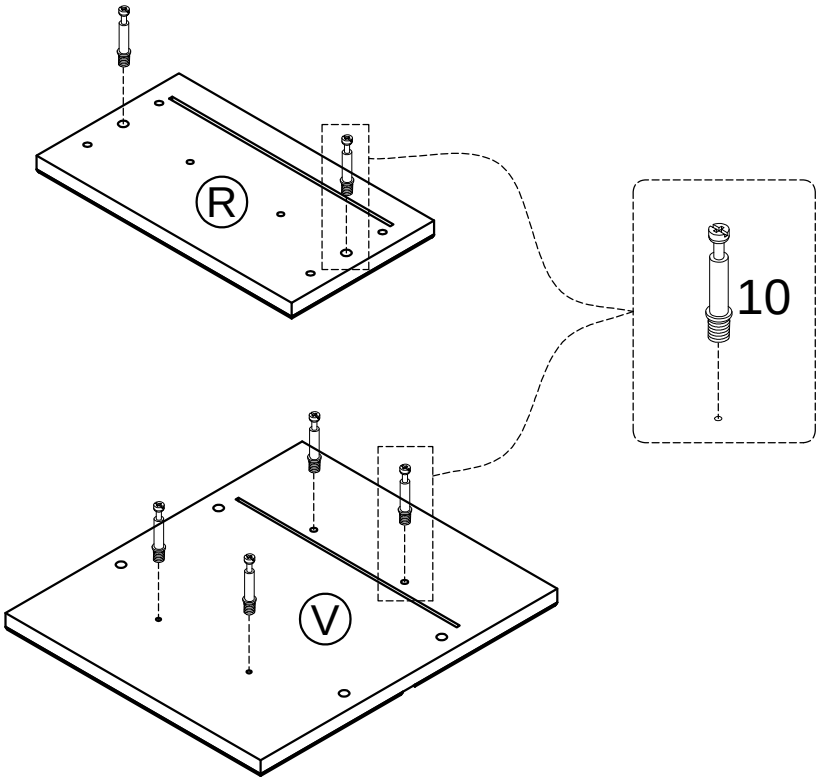

10	6PCS

STEP 24

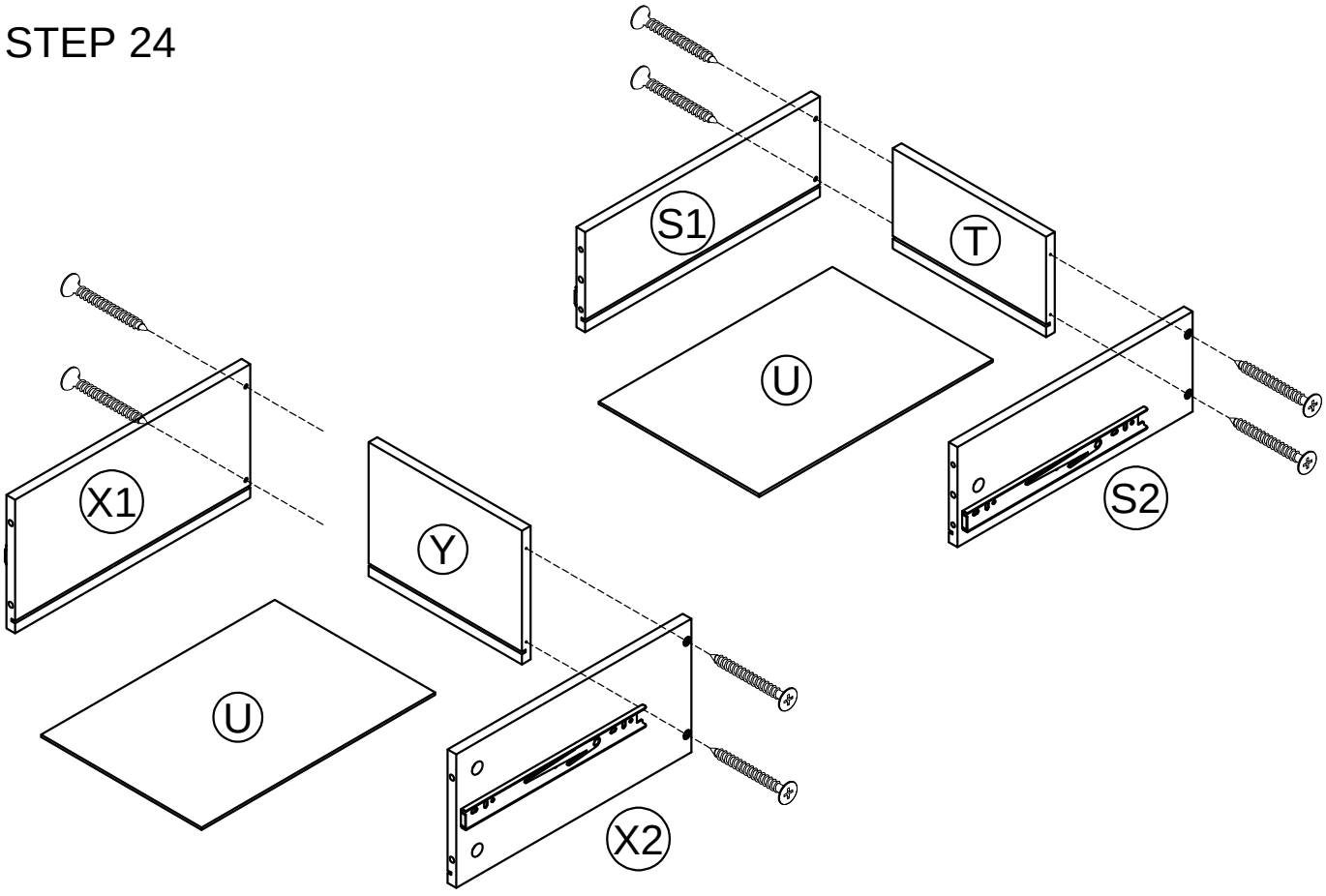

14	8PCS

STEP 25

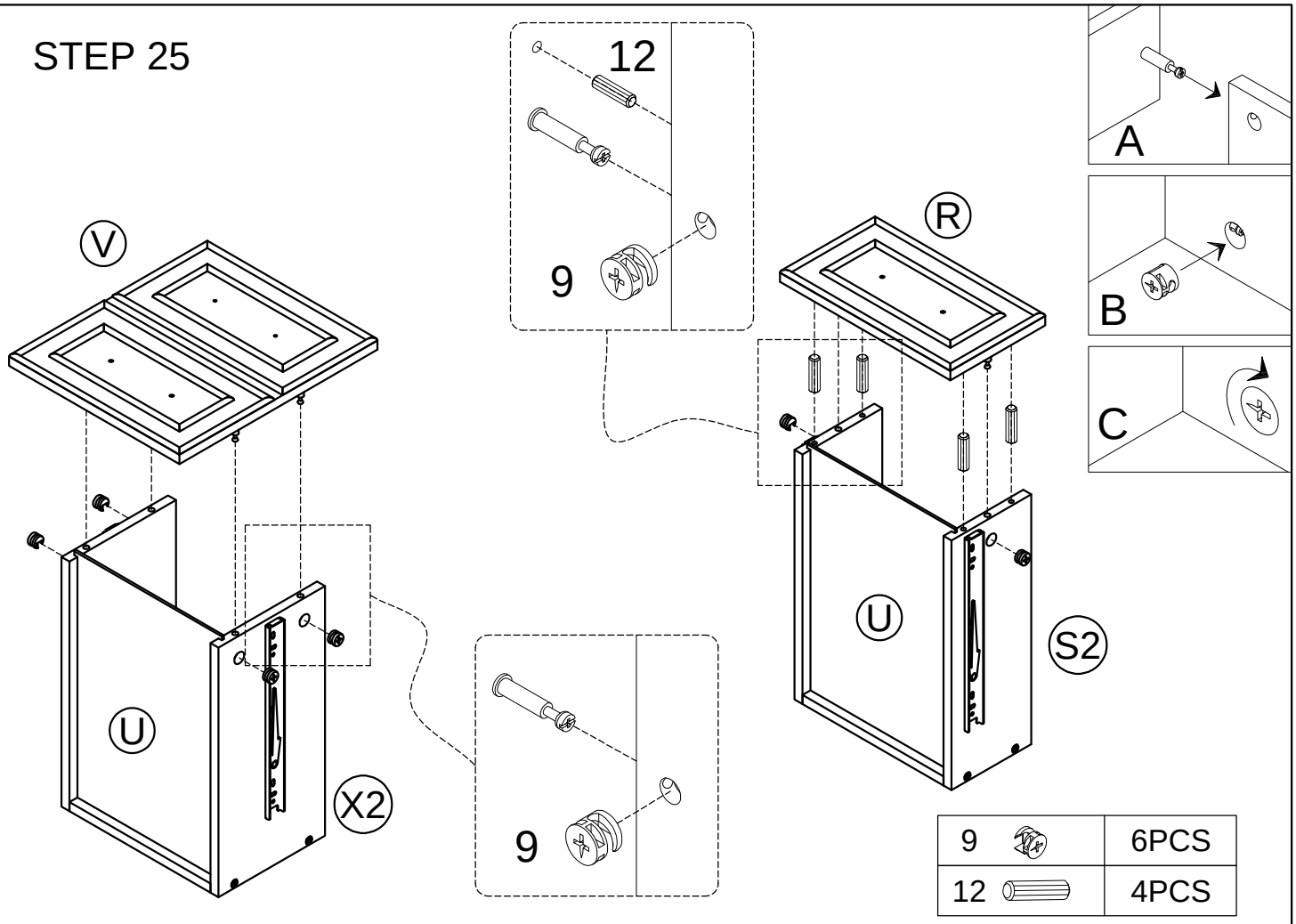

9	6PCS
12	4PCS

STEP 26

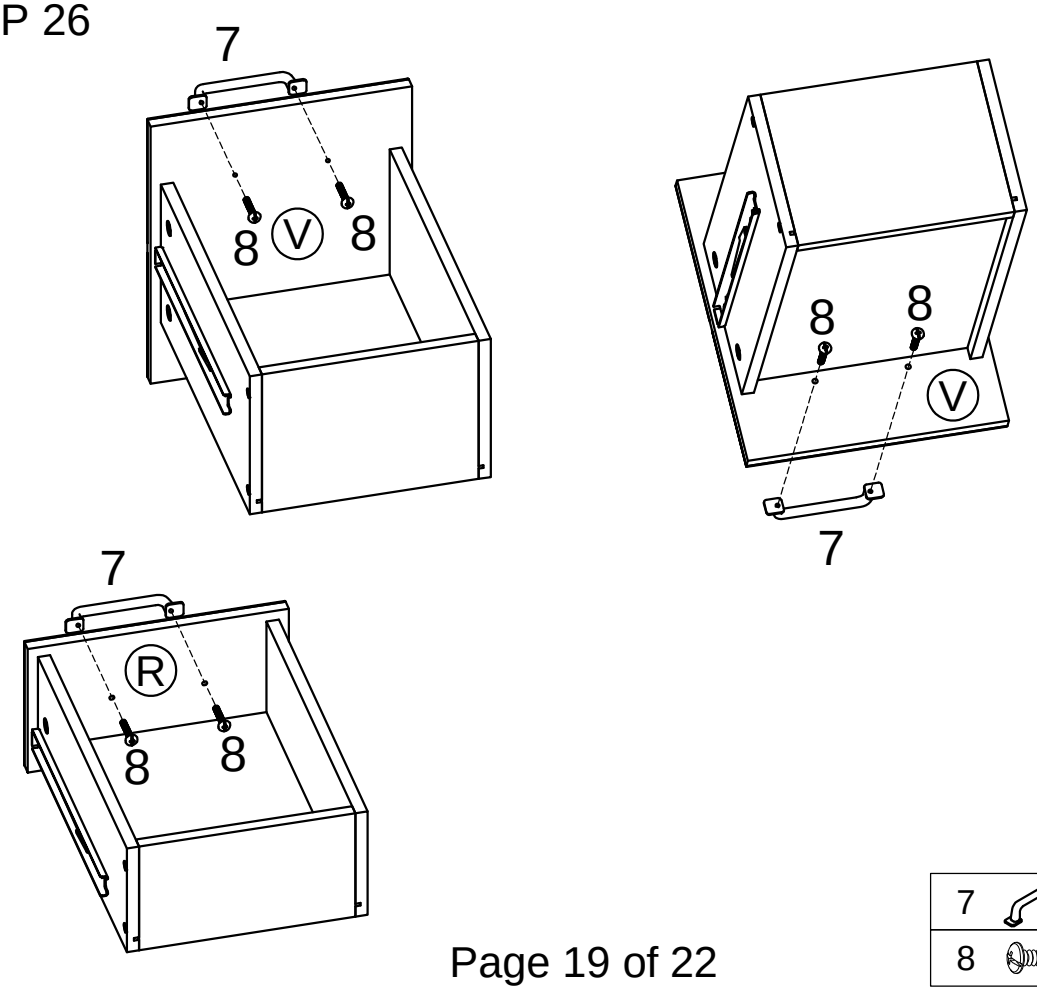

7	3PCS
8	6PCS

STEP 27

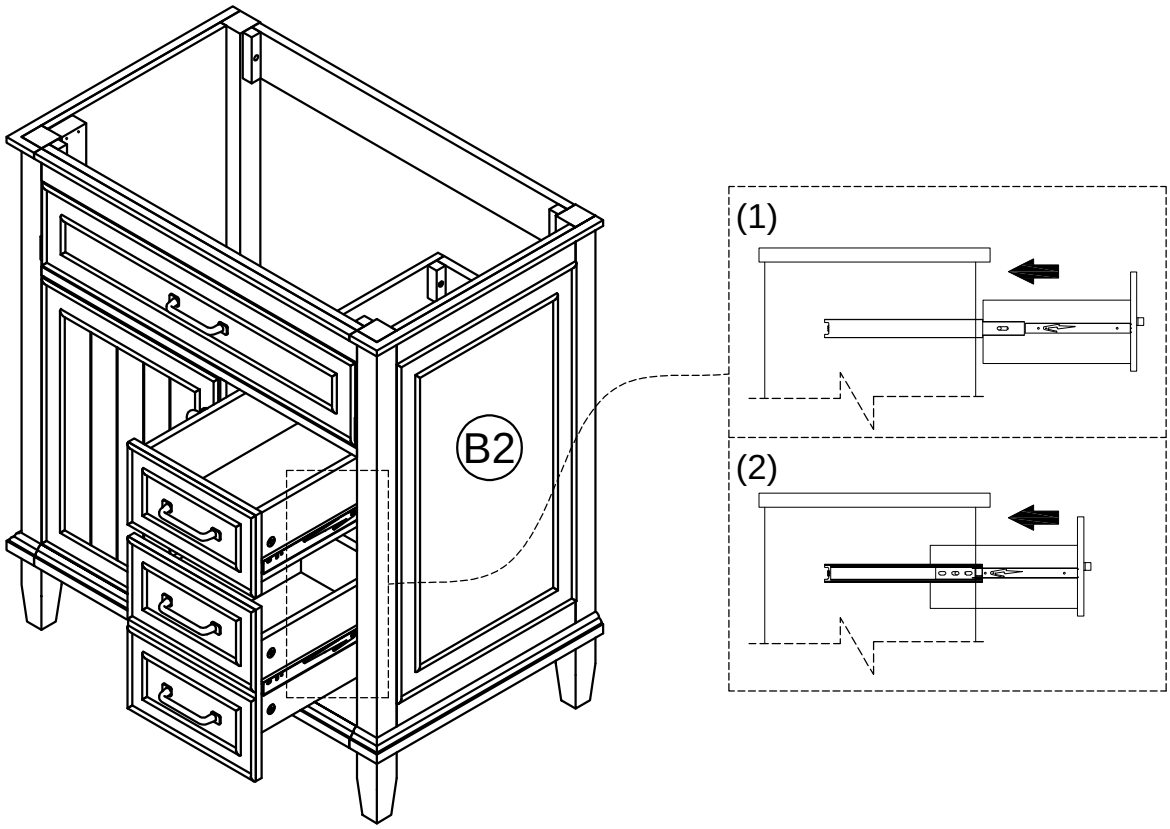

STEP 28

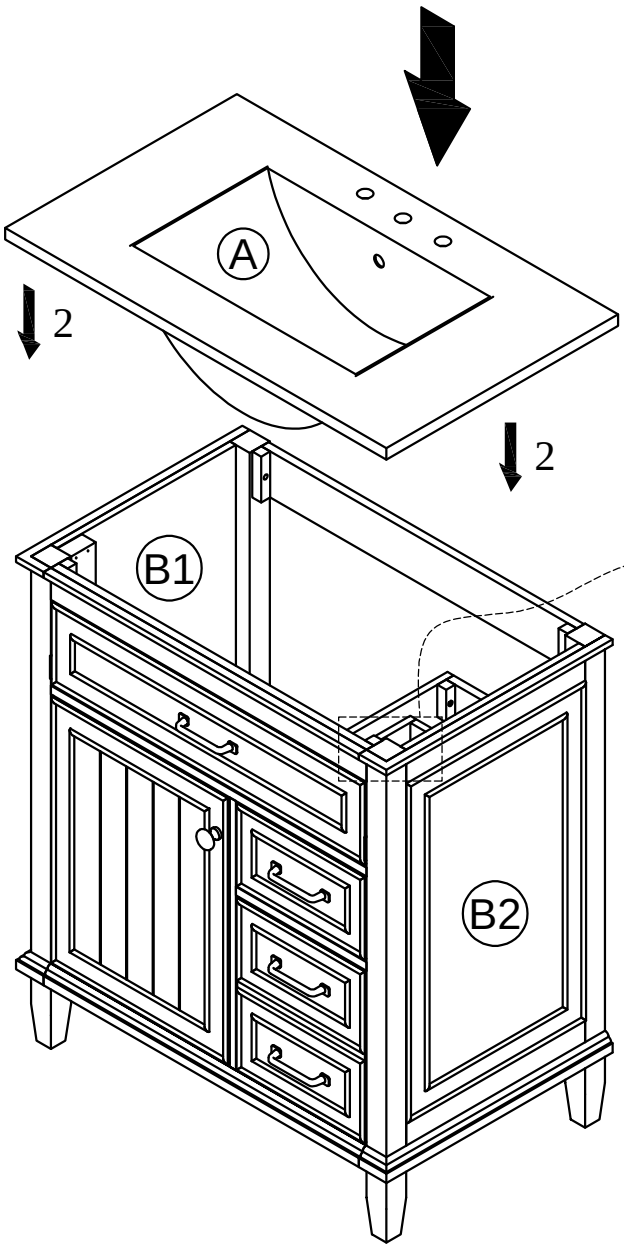

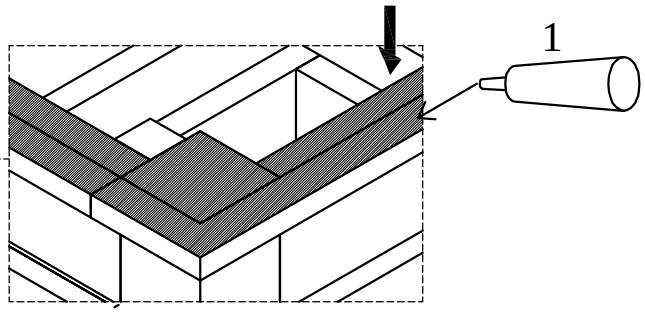

To install the Top (1) onto the Vanity (2).
Apply silicone caulk along the top edge of the wooden cabinet.
With the help of another adult carefully lower the sink top
with the sink already assembled onto the cabinet.
Make sure the sink top is flush with the back of the
wooden cabinet and aligned with the left and right side panels.
Apply installation adhesive to secure the Top (1) to the Vanity (2)

WARNING

Serious or fatal crushing injuries can occur from furniture tip-over.
If the furniture tip over restraint kit is not in the box, please contact our customer service department in order to obtain another kit before using the furniture.

A1		4	D1	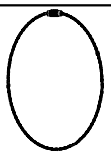	2
B1	 M4 X 20mm	2			
C1	 M4 X 40mm	2	E1	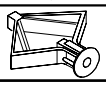	2

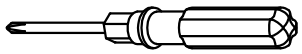

NOTE: The screwdriver is not included in the hardware pack.

It can be attached with a wall plug or not, depending on the wall's hardness.

