Owner Manual

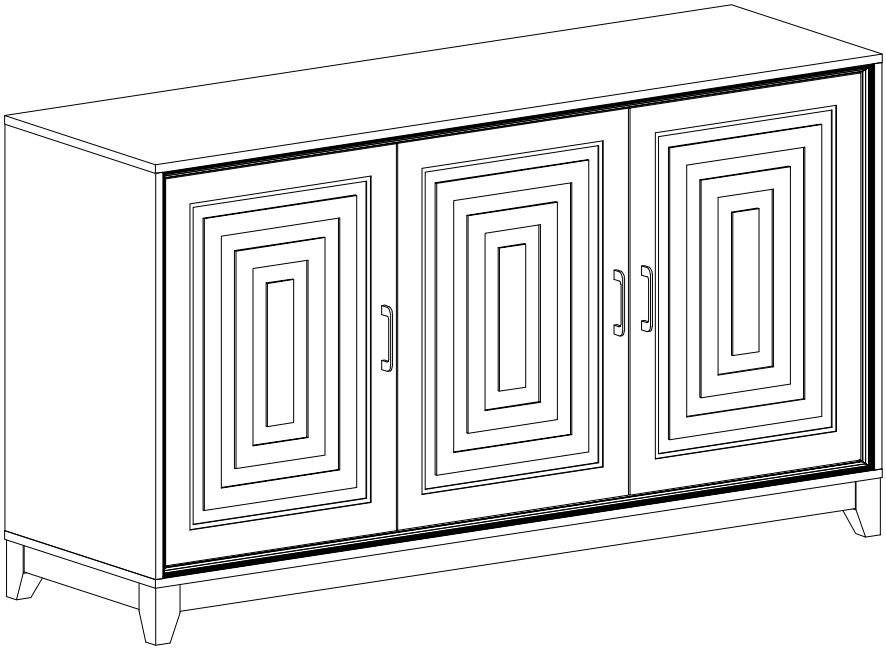

Attention:

Do not use this product until the anti-dumping hardware is installed.

Important - Please read these instructions fully before starting assembly.

1. Thank you for choosing *our products.*

2. Return Policy

DO NOT RETURN TO THE STORE! Skip the process of returning your product and contact us directly for a replacement

If you find that parts of your order are missing or damaged, we will gladly ship any needed replacement parts free of charge.

If your product's quality does not meet your expectations or you have found any sort of defect, please contact our customer service department and let us know the details of your order and any issues encountered, we will try our best to provide you with a solution. Feel free to also directly contact our manufacturer concerning needed replacement parts and they will be happy to help provide you with a solution or answer any questions you may have.

Recommendations Before Beginning Assembly

- Read instructions, cover to cover
- Have 2-4 adults on hand for assembly depending on product size
- Do not assemble directly on flooring or carpet
- Assemble on a clean non-marring surface (example: packing foam)
- Save all packaging until finished

3. Assembly Notice:

- If you encounter any problems during assembly and find that you cannot continue, rest assured we will help you solve the situation as soon as possible. Simply keep all of the parts of the product stored in a safe place and contact us immediately so we may assist you further.
- Once you have opened your package, remove all inner hardware packages and take the parts out. One by one, Place the parts out neatly in front of you, then refer to the instructions to ensure no parts are missing. If any pieces are found missing, please carefully look in the box first, as the hardware packaging might have torn making the hardware spill in the box.
- Some key parts of your product may be stored and hidden inside of other parts. Please open any zippered or hook & loop storage compartments to remove all parts. (example: cushions and legs being stored in the underside of a sofa)
- IMPORTANT: When setting up your product, DO NOT INSTALL THE SCREWS ALL THE WAY IN THE BEGINNING. Place each screw into their proper hole and use your hand to twist the screw halfway. Twist all the screws in halfway to ensure the holes will match up properly and the product is level on the ground. When everything seems fitted, then

tighten the screws.

- When you have completed assembly, we suggest you have more than one person to assist you with lifting and placing the product.

Care & Maintenance

Do not put hot items directly on furniture surface

Do not clean furniture with harsh cleansers or polish

Do not place furniture under direct sunlight

Do not place furniture near heating or cooling vents

Do not write on furniture without a padded barrier to protect the surface

Do not place furniture outside. For indoor use only

Not for commercial use. For residential use only

Stains may be removed with mild soap solution and damp cloth

Children should not climb or jump on the furniture

Dust and pick-up spills using a clean, non-colored, lint-free cloth

Caution

● This product contains small components. Please ensure that they are kept away from small children.

● Do not use power tools to assemble your furniture. Power tools may strip or damage the parts.

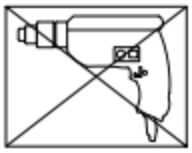

components - fittings

Please check you have all the panels listed below.

Note: The quantities below are the correct amount to complete the assembly. In some cases more fittings may be supplied than are required.

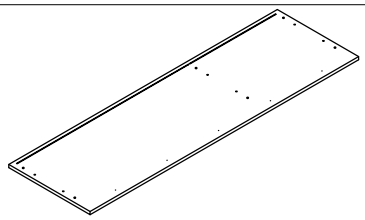	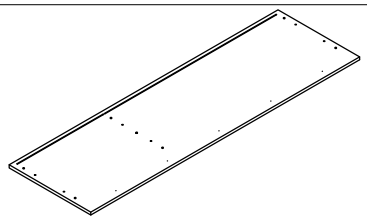	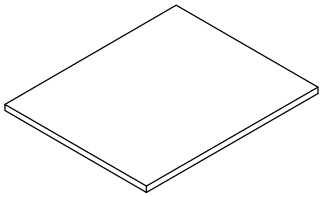
1 x 1pc	4 x 1pc	6 x 1pc
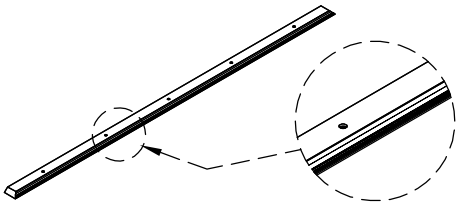	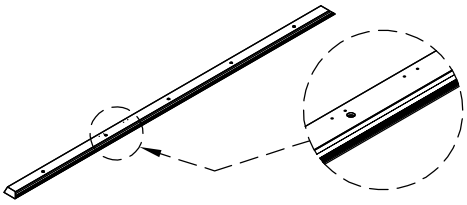	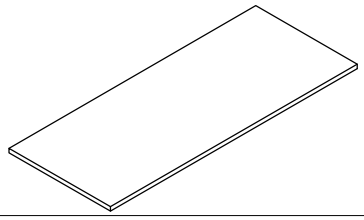
7 x 1pc	8 x 1pc	9 x 1pc
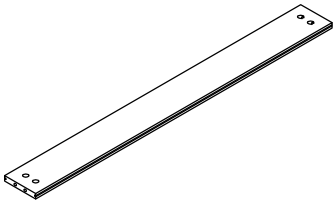	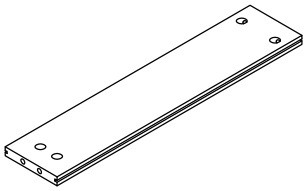	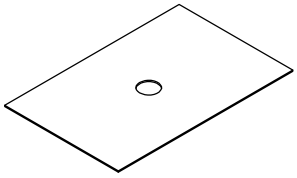
10 x 1pc	11 x 1pc	12 x 1pc
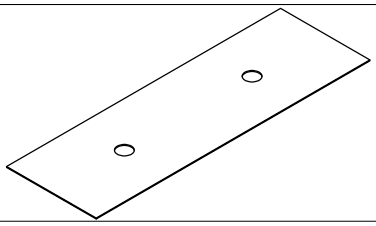	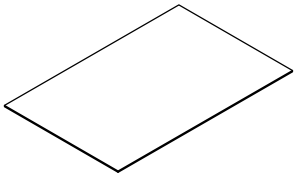	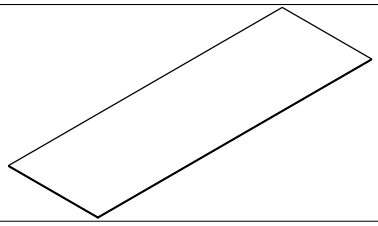
13 x 1pc	14 x 1pc	15 x 1pc
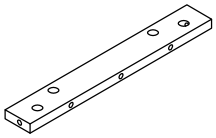	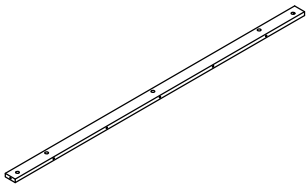	
16 x 2pcs	17 x 2pcs	

components - fittings

Please check you have all the panels listed below.

Note: The quantities below are the correct amount to complete the assembly. In some cases more fittings may be supplied than are required.

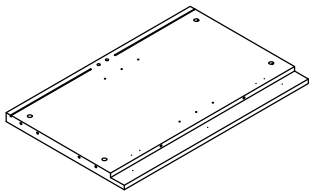	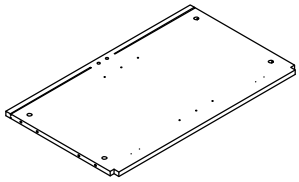	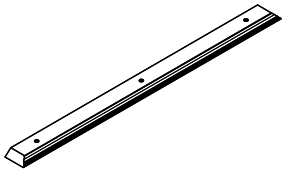
(2) x 2pcs	(3) x 1pc	(5) x 2pcs
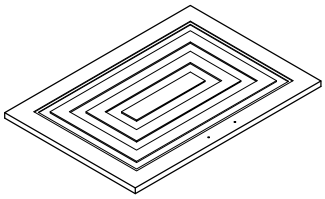		
(19) x 3pcs		

components - fittings

Please check you have all the panels listed below.

Note: The quantities below are the correct amount to complete the assembly. In some cases more fittings may be supplied than are required.

Hardware-Liste

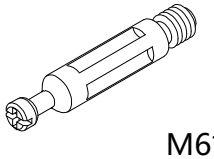 M6*40	Φ15*11	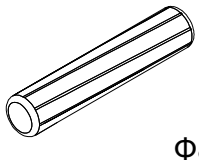 Φ8*40	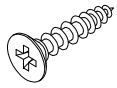 Φ3.5*14
A x 38pcs	B x 38pcs	C x 26pcs	D x 62pcs
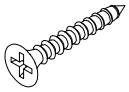 Φ3.5*25			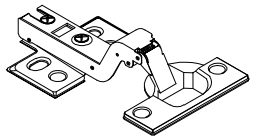
E x 16pcs	F x 8pcs	G x 20pcs	H x 4pcs
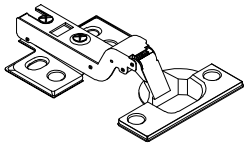	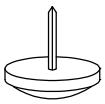	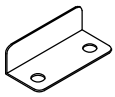	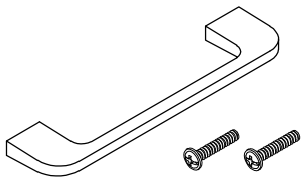
J x 2pcs	K x 5pcs	L x 2pcs	M x 3sets
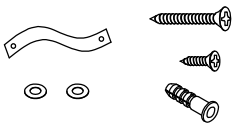	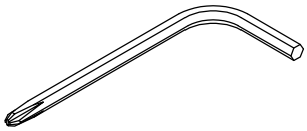	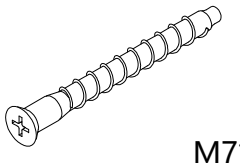 M7*50	
N x 2sets	P x 1pc	Q x 1pc	18 x 4pcs
20 x 1pc			

Assembly Instructions

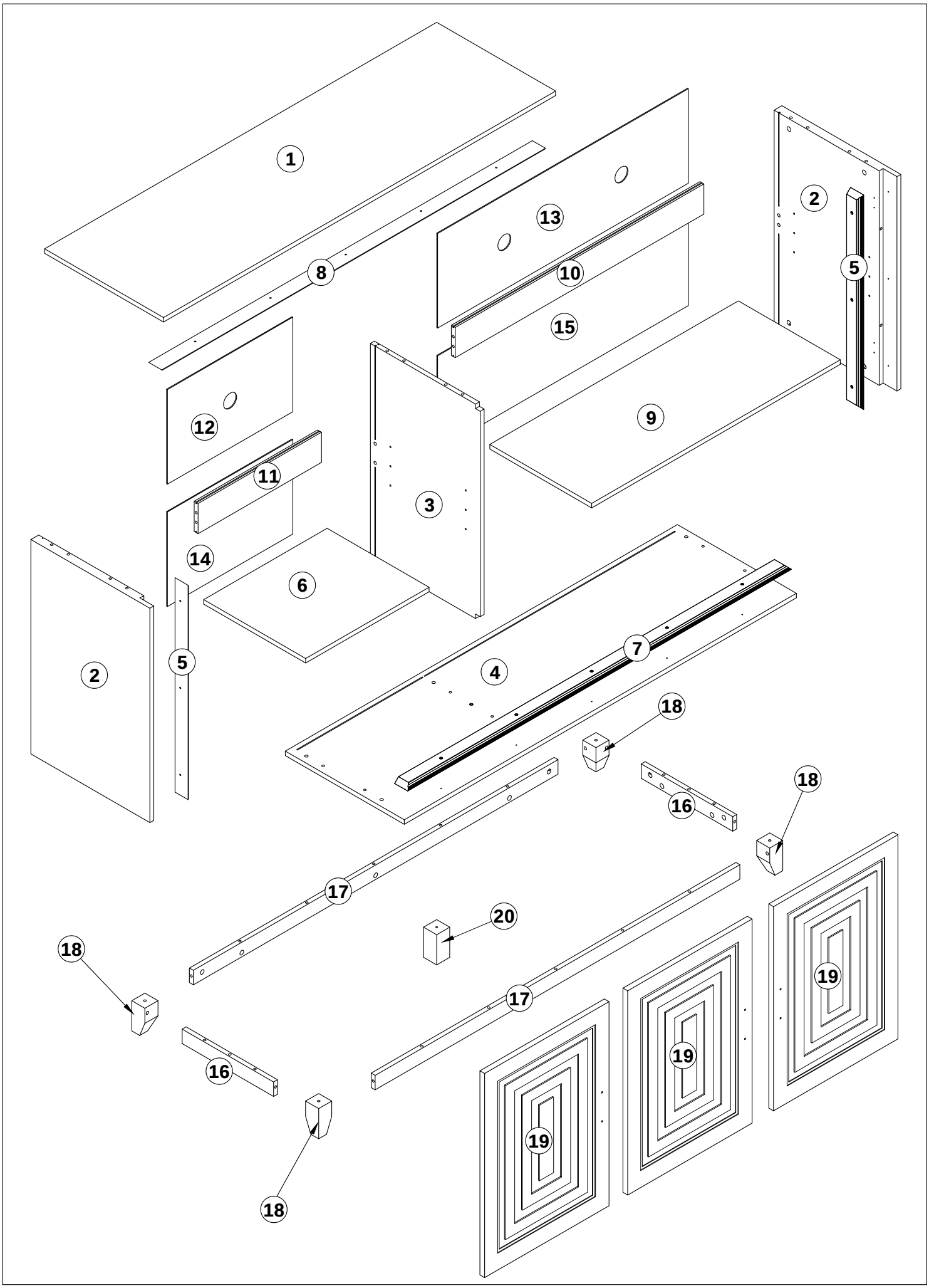

Assembly Instructions

STEP 1

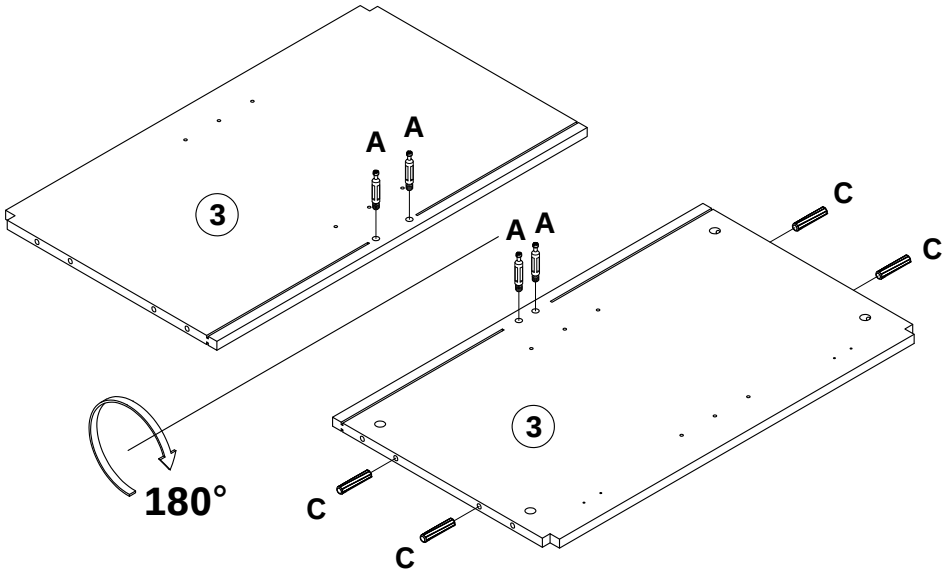

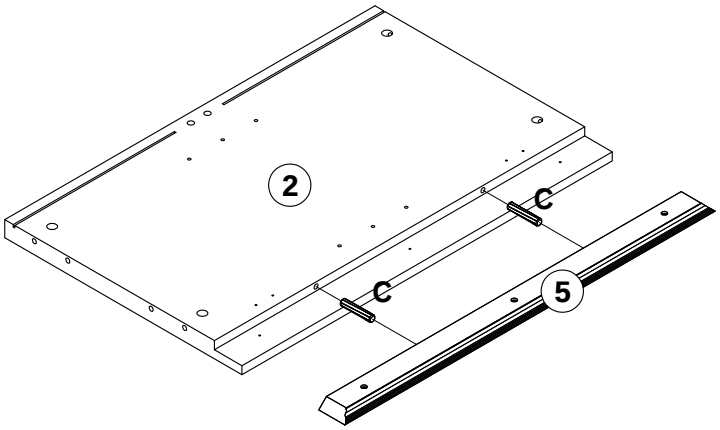

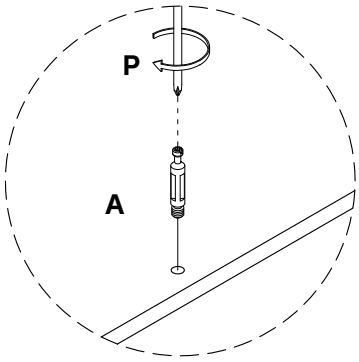

x 2

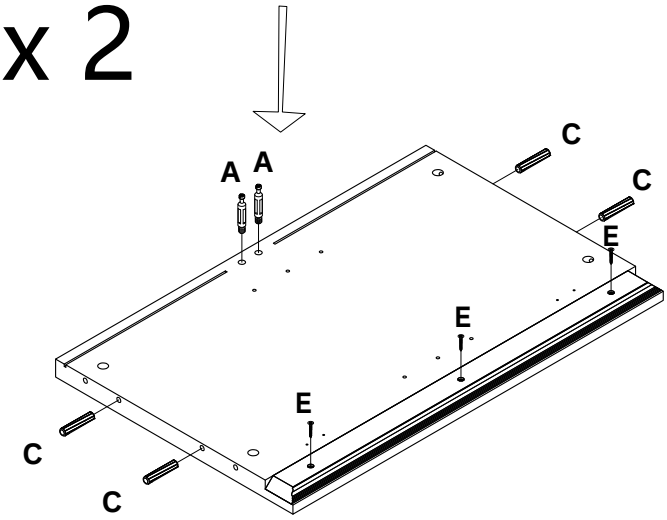

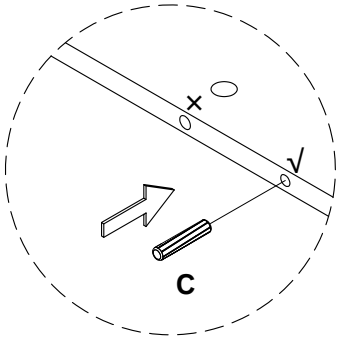

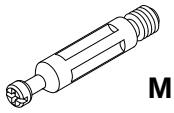 M6*40	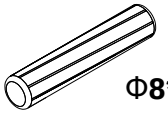 Φ8*40	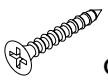 Φ3.5*25
A x 8pcs	C x 16pcs	E x 6pcs

Assembly Instructions

STEP 2

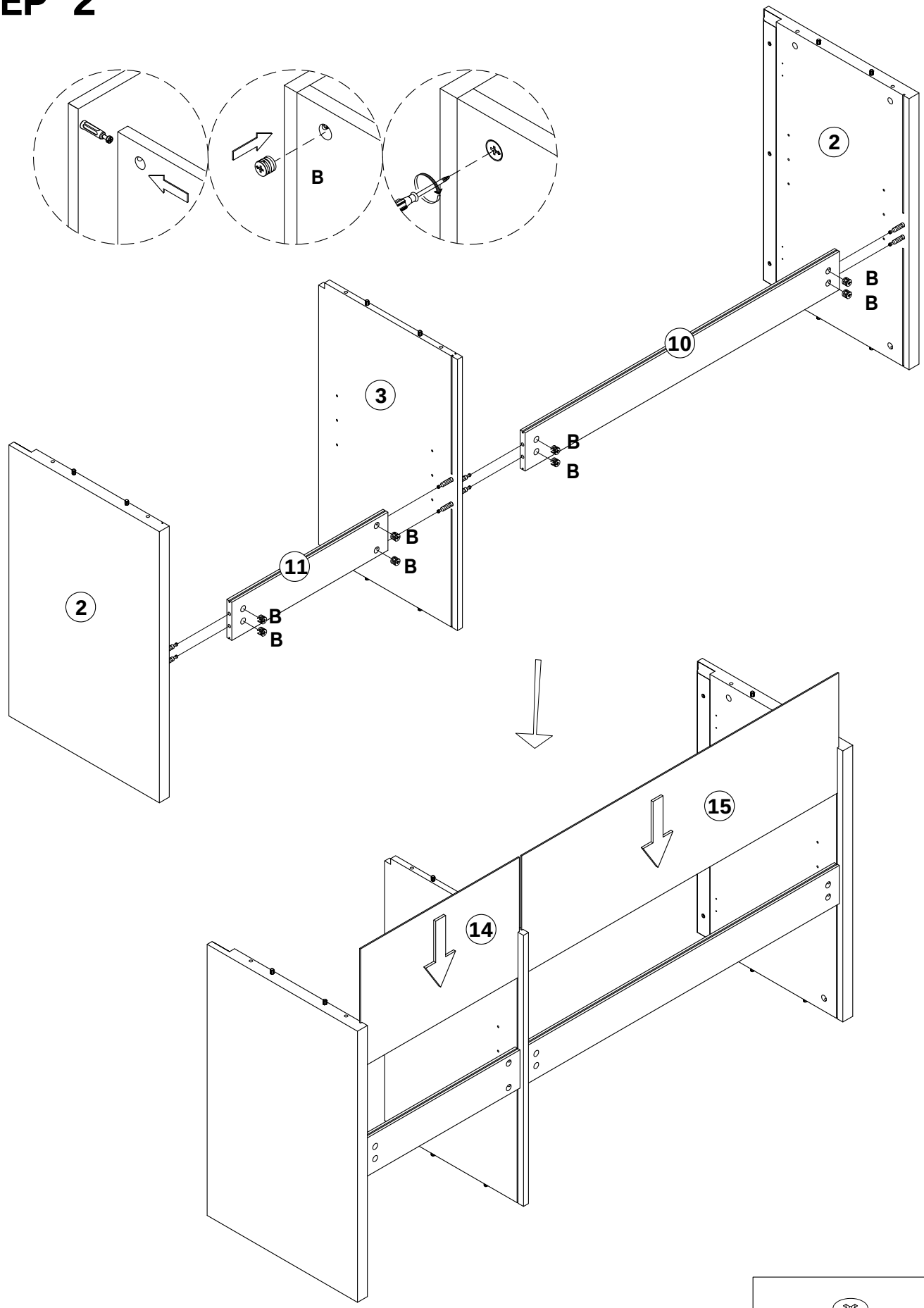

Φ15*11

B x 8pcs

Assembly Instructions

STEP 3

E
E
E
E
E
4
7
A
A
4
A
Q
A
A
A
20
A
A
A
A
A
4
A
A
A
A
A
180°

M6*40	Φ3.5*25	M7*50
A x 16pcs	E x 5pcs	Q x 1pc

Assembly Instructions

STEP 4

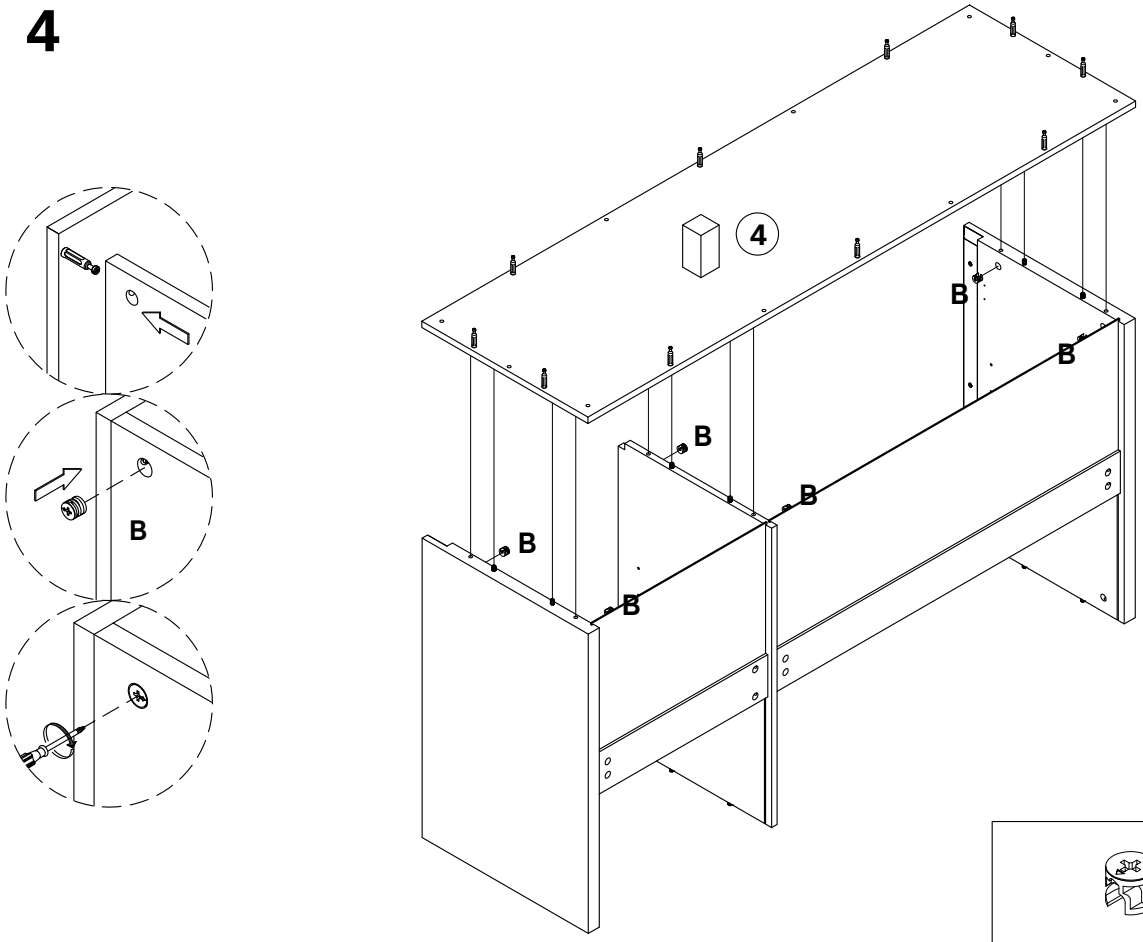

Φ15*11	
B x 6pcs	

STEP 5

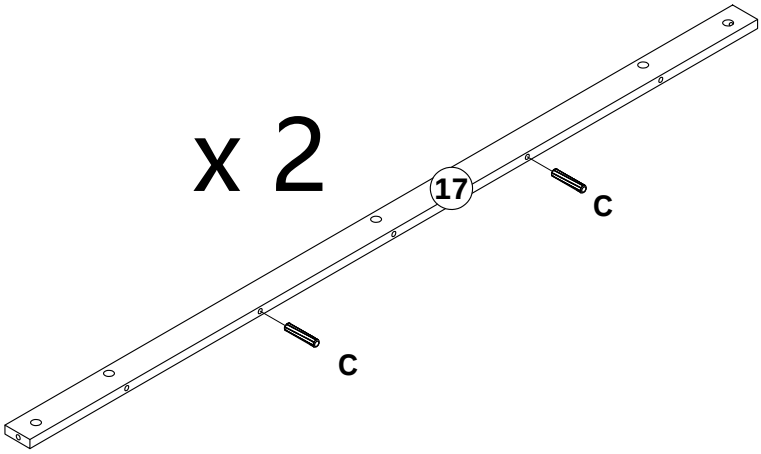

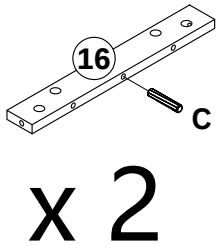

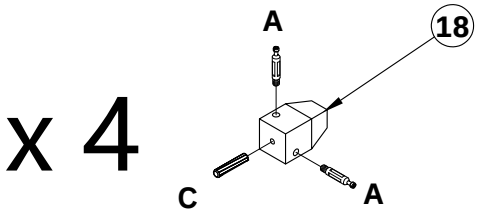

M6*40	Φ8*40
A x 8pcs	C x 10pcs

Assembly Instructions

STEP 6

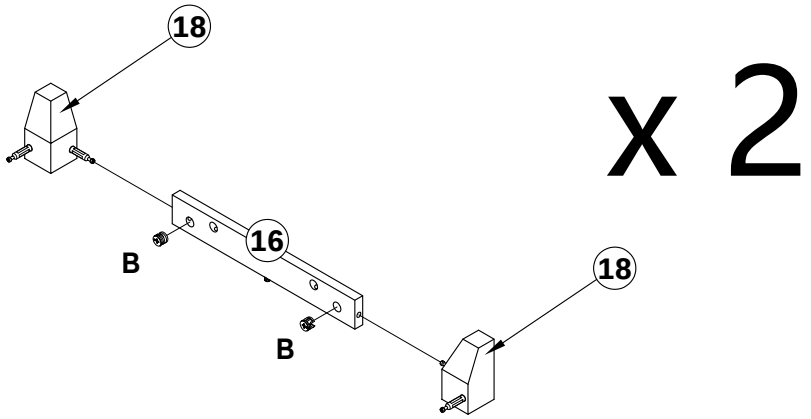

Φ15*11

B x 4pcs

STEP 7

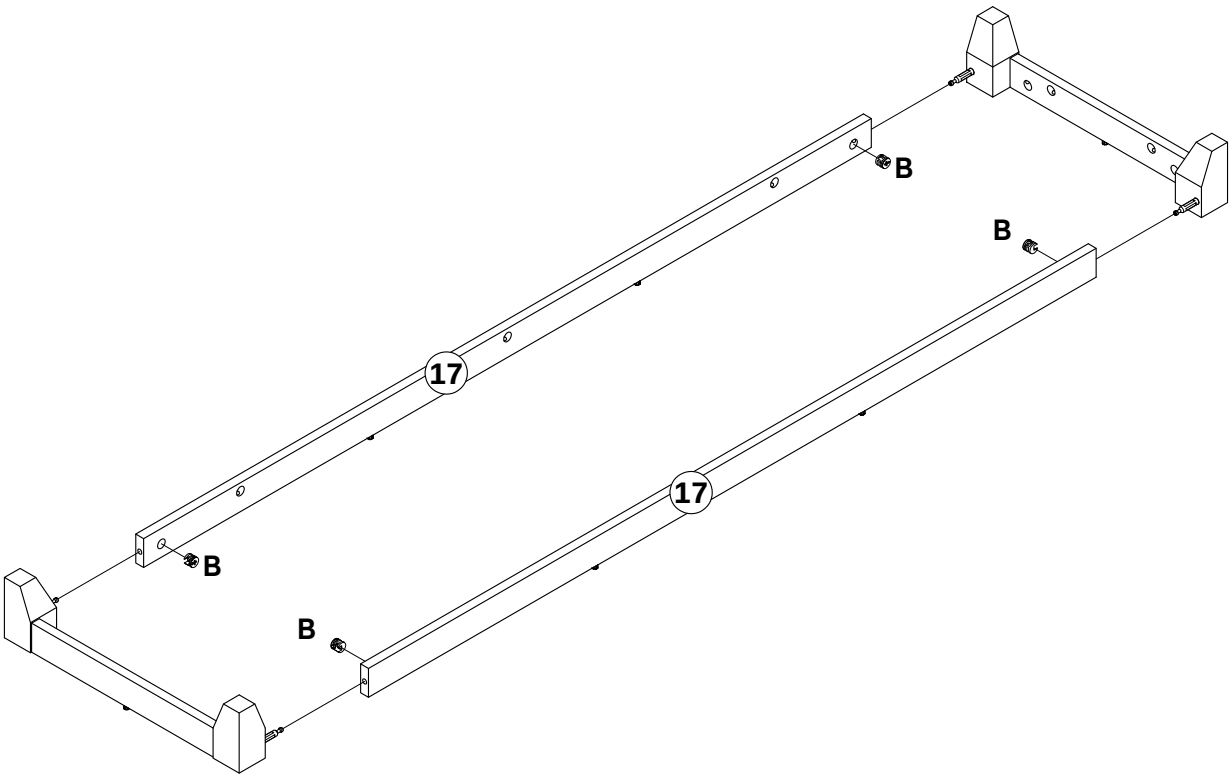

Φ15*11

B x 4pcs

Assembly Instructions

STEP 8

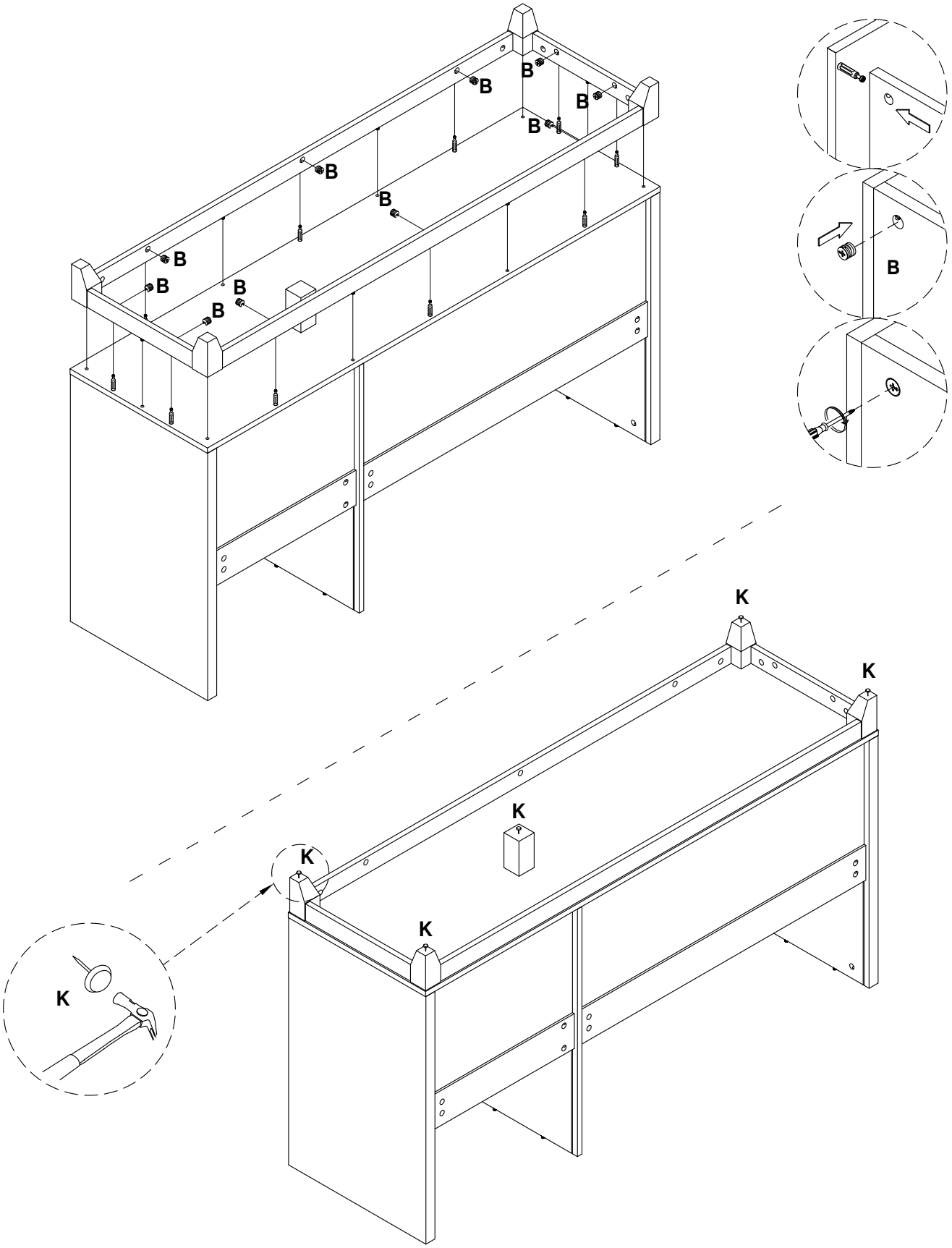

Φ15*11	
B x 10pcs	K x 5pcs

Assembly Instructions

STEP 9

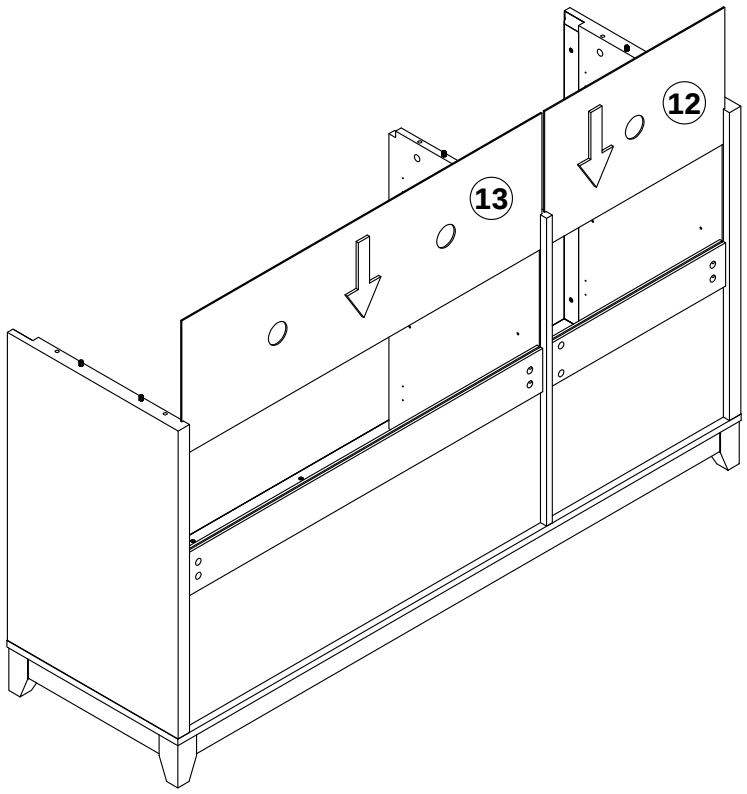

STEP 10

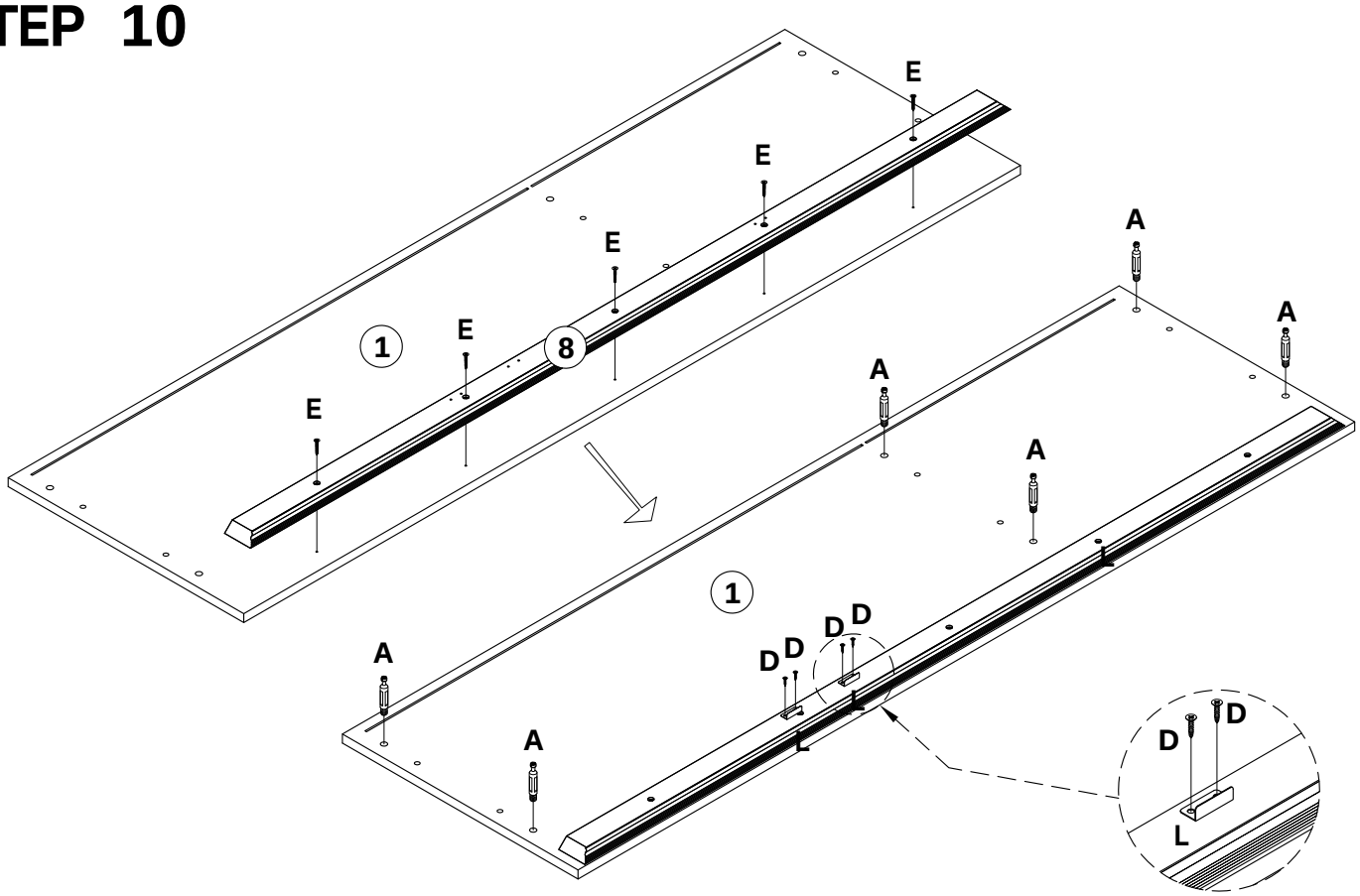

M6*40	Φ3.5*14	Φ3.5*25	
A x 6pcs	D x 4pcs	E x 5pcs	L x 2pcs

Assembly Instructions

STEP 11

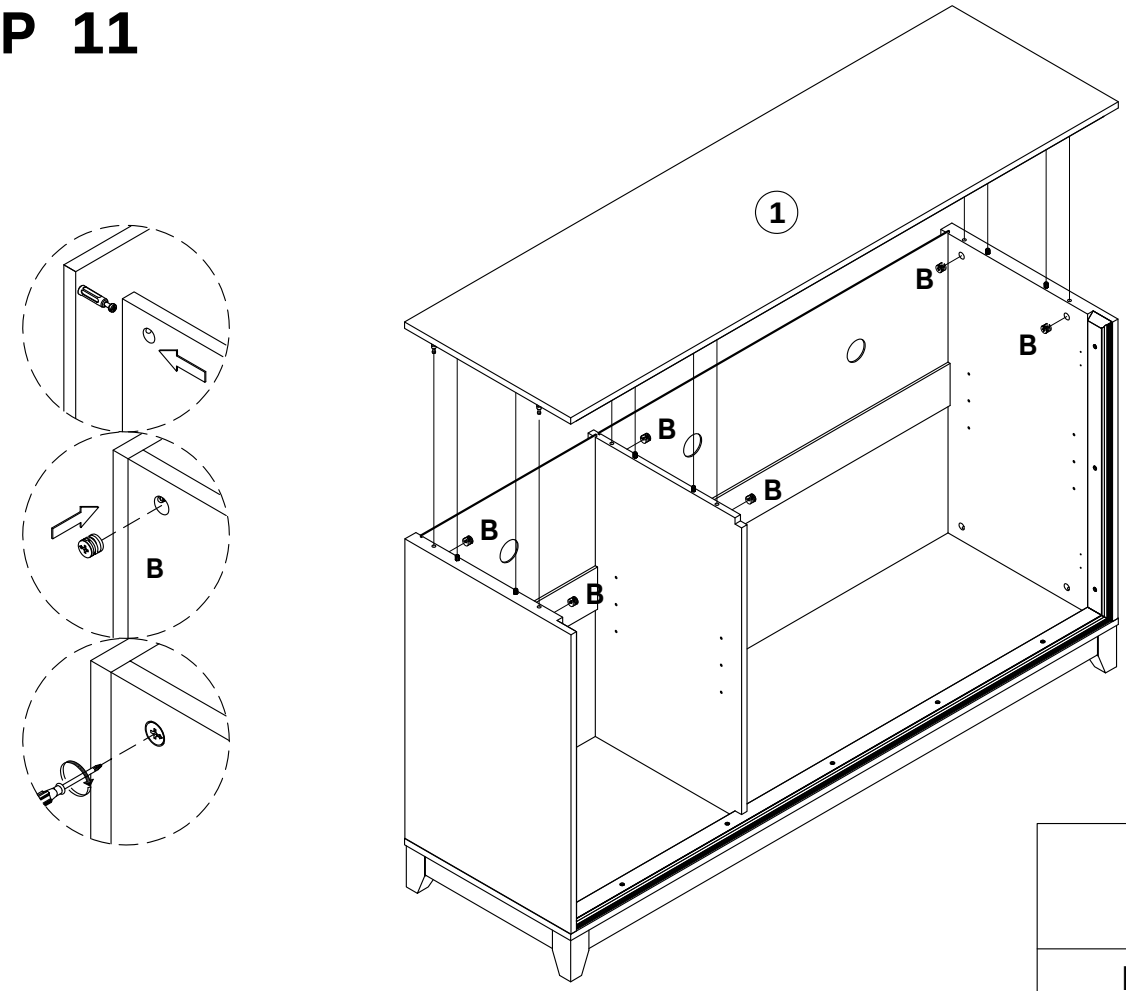

Φ15*11	
B x 6pcs	

STEP 12

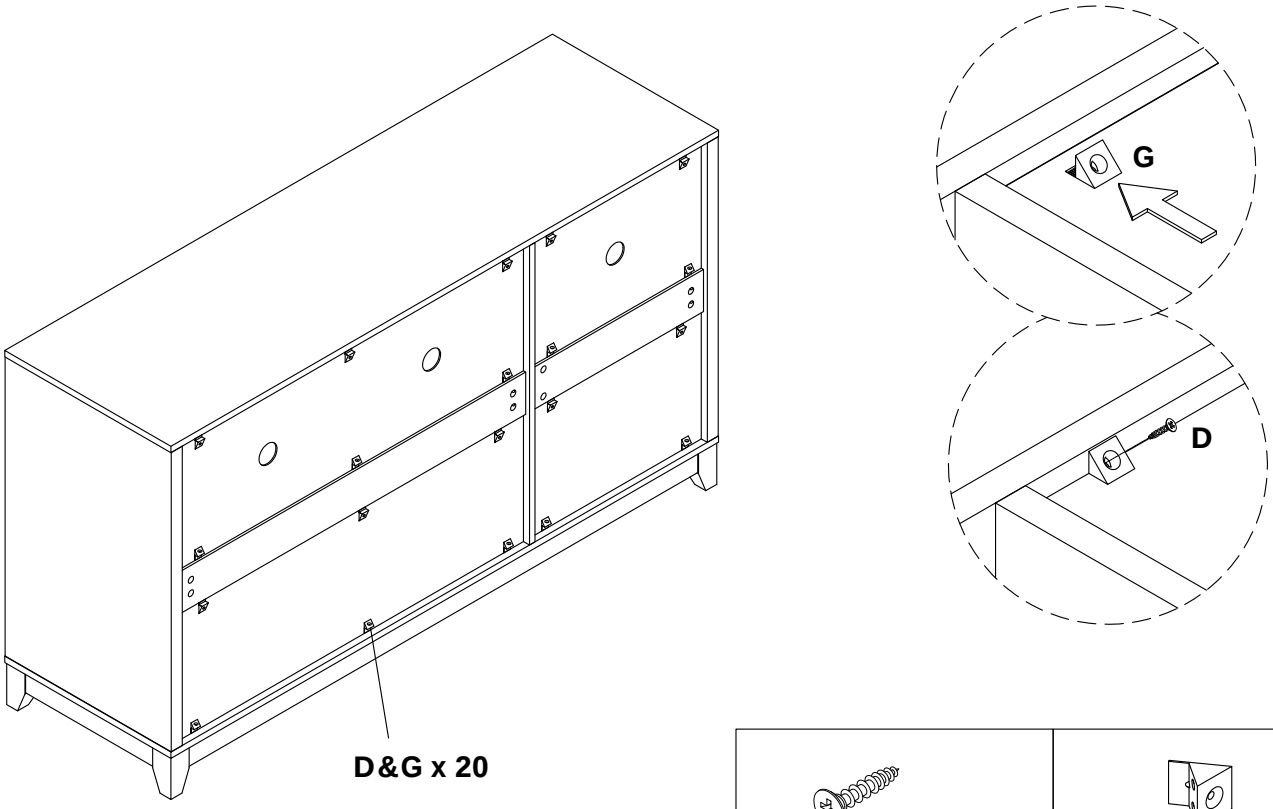

Φ3.5*14	
D x 20pcs	G x 20pcs

Assembly Instructions

STEP 13

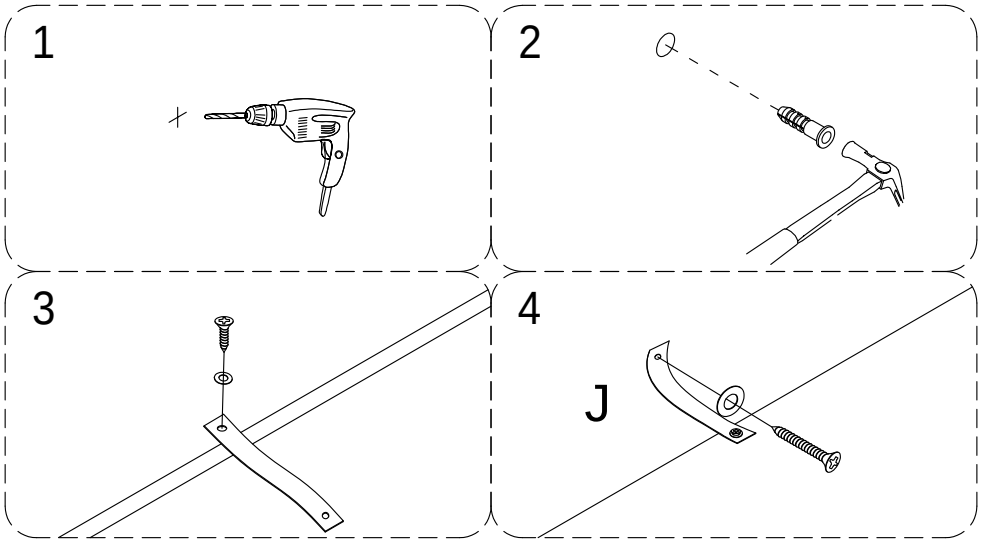

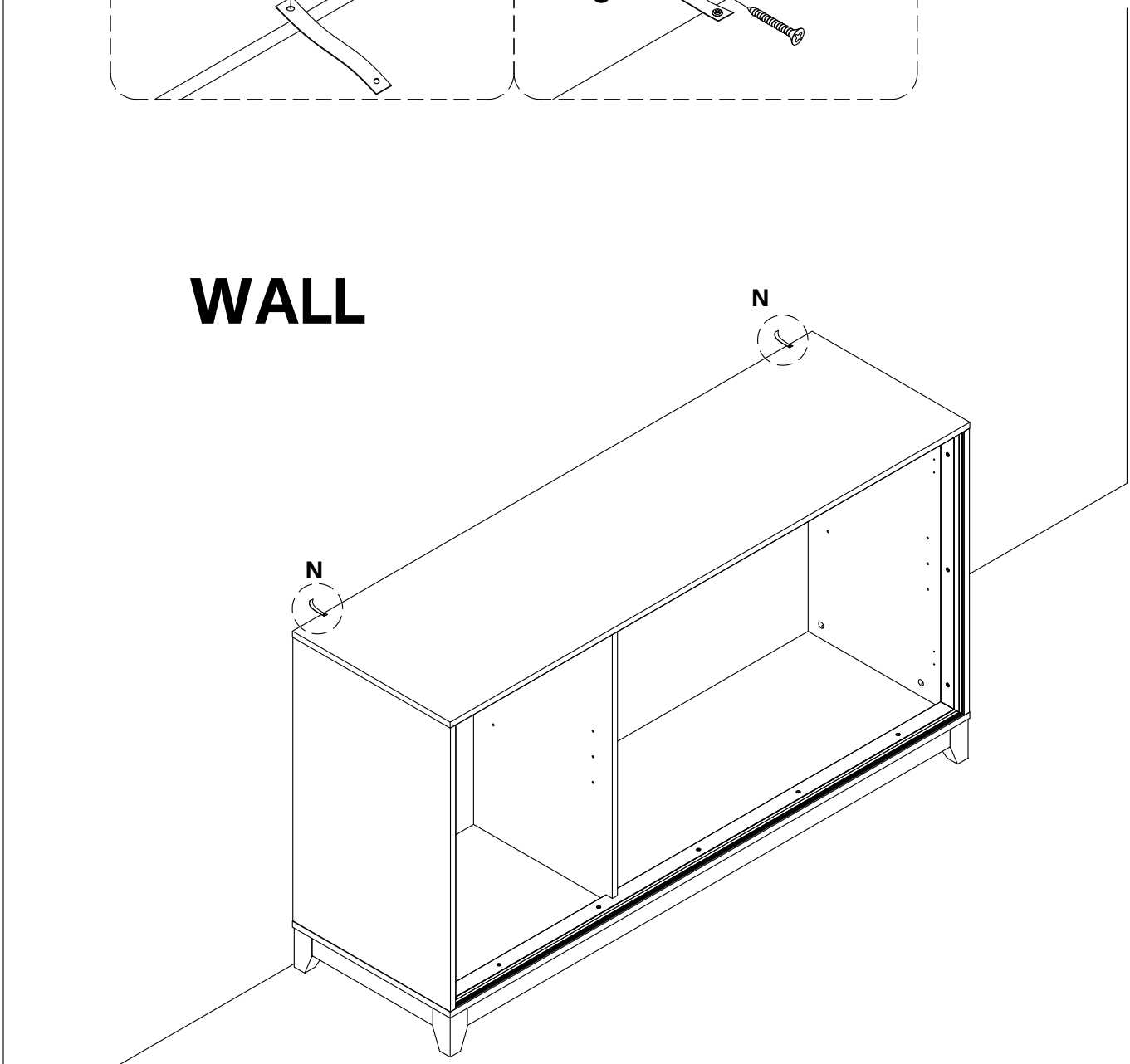

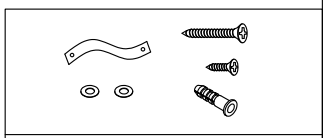

N x 2sets

Assembly Instructions

STEP 14

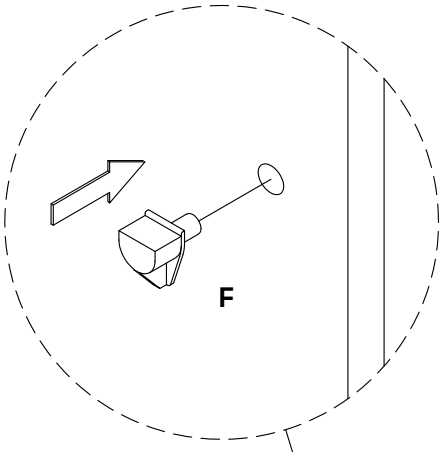

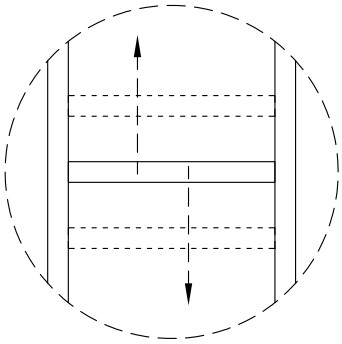

The shelf can be adjusted up and down

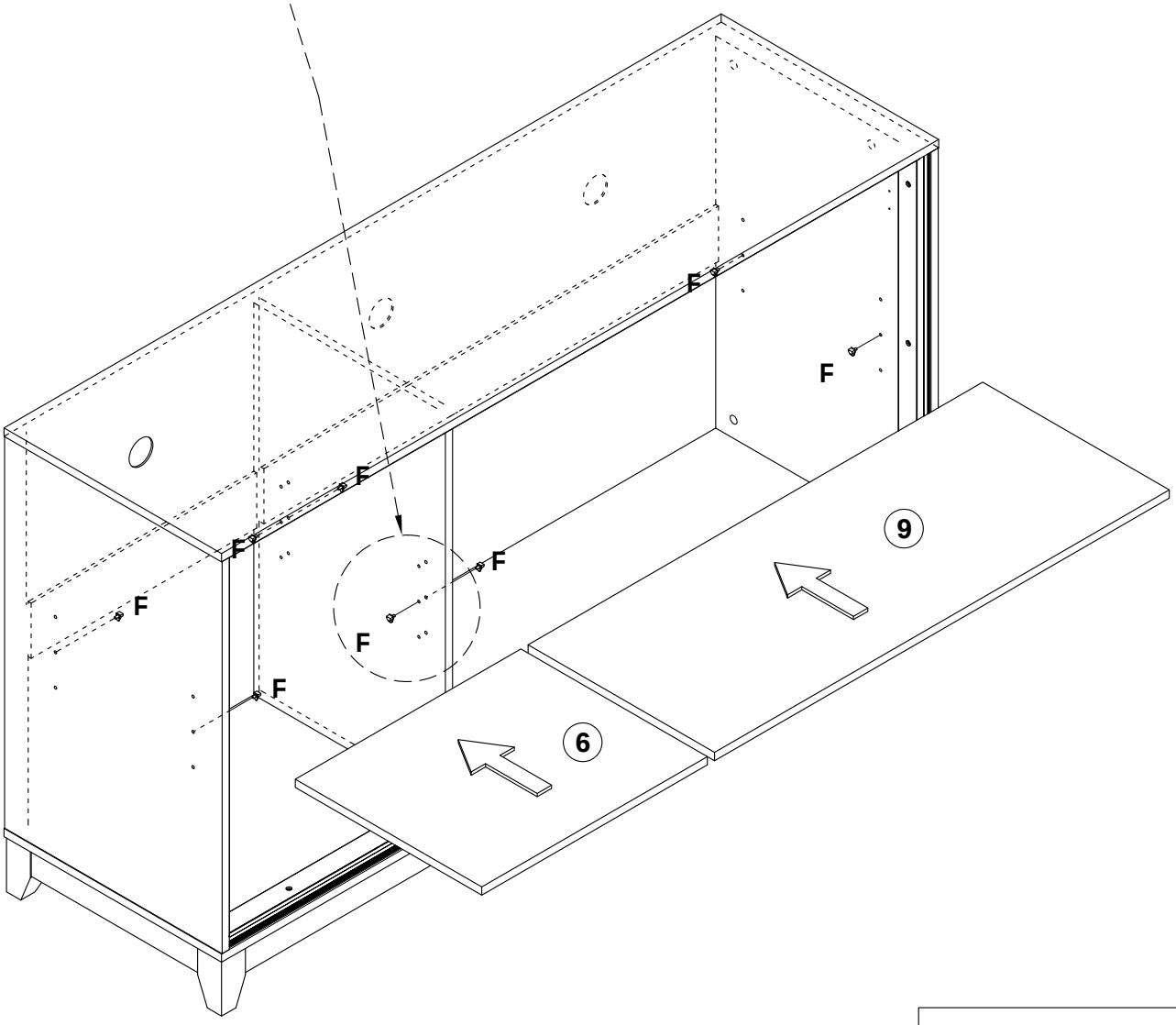

F x 8pcs

Assembly Instructions

STEP 15

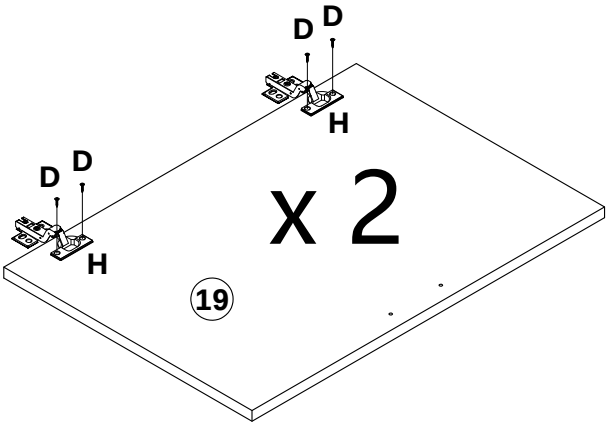

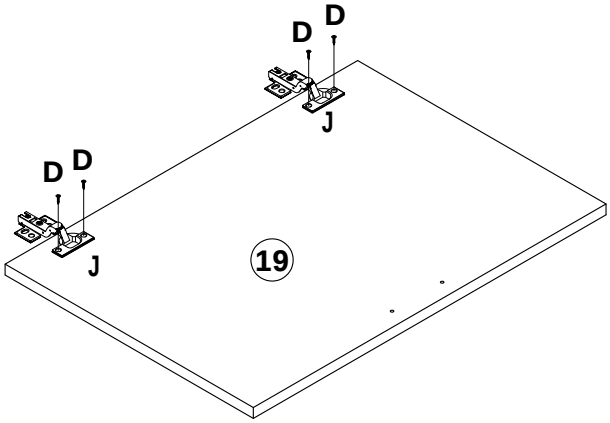

Φ3.5*14		
D x 12pcs	H x 4pcs	J x 2pcs

STEP 16

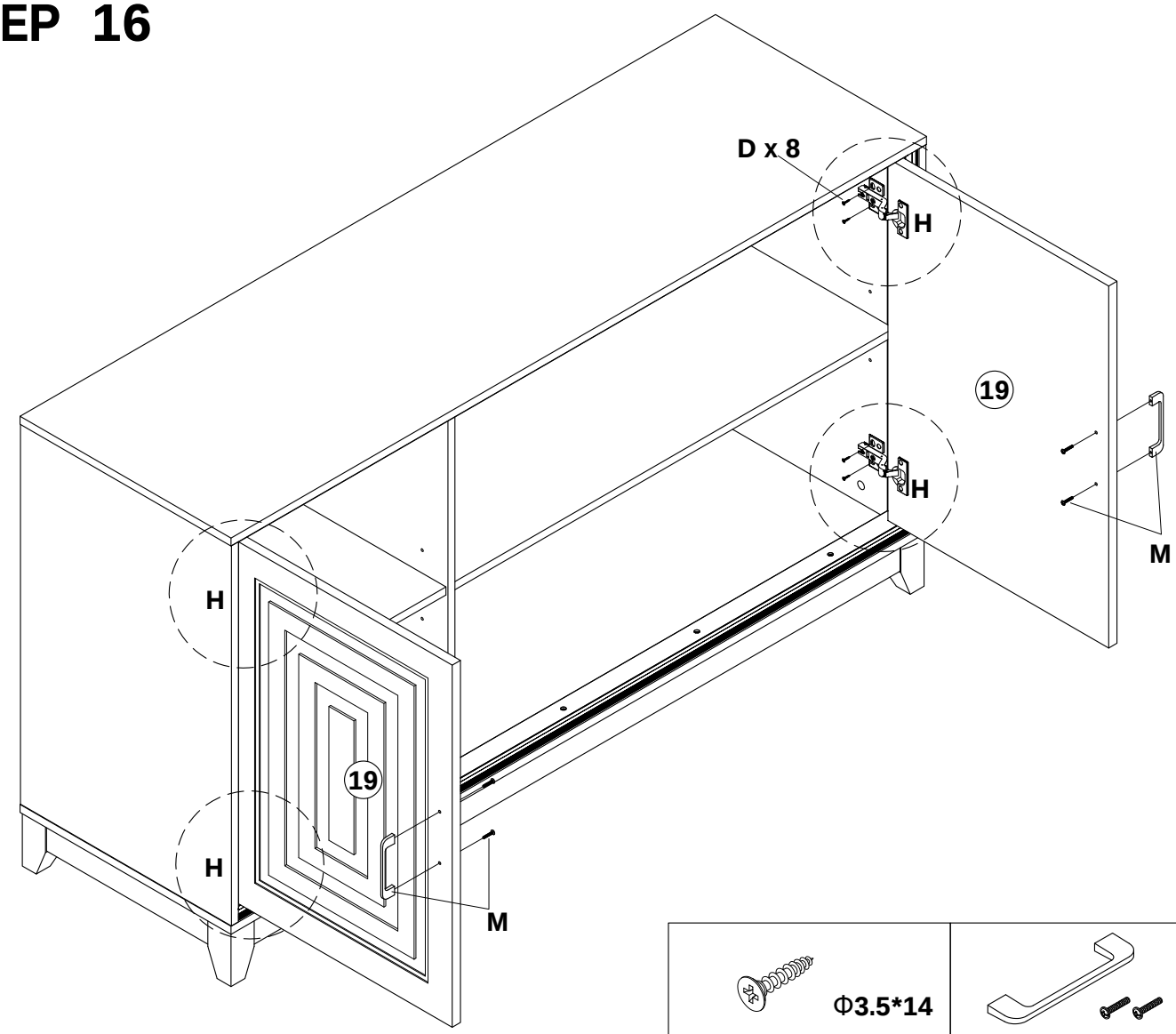

Φ3.5*14	
D x 8pcs	M x 2sets

Assembly Instructions

STEP 17

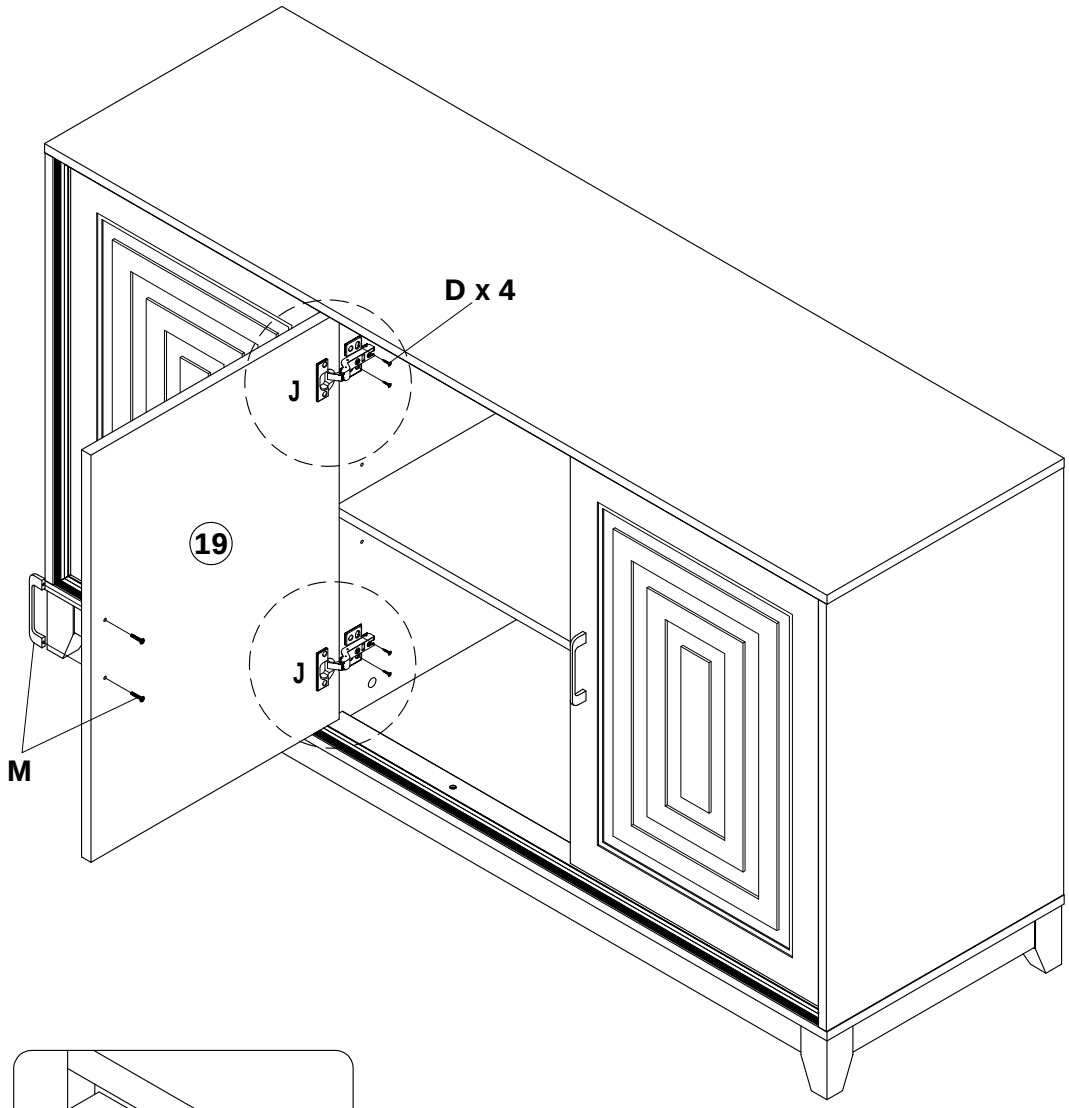

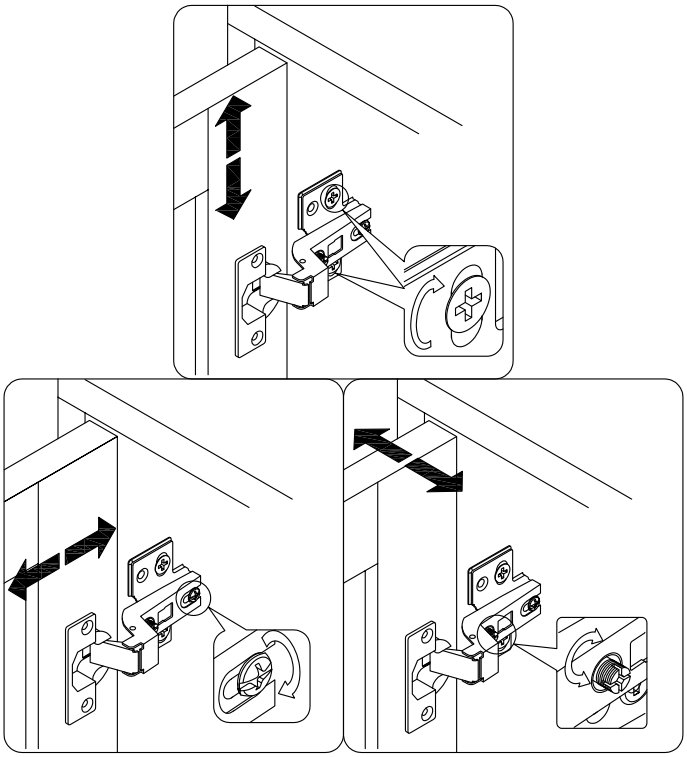

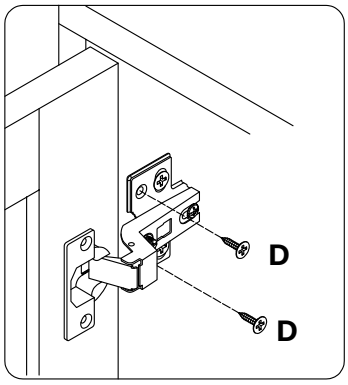

After adjusting the gaps of all doors evenly, fix them with hardware D.

Φ3.5*14	
D x 16pcs	M x 1set