Assembly Instruction

MODEL: YGZ100
PRODUCT SIZE:10X20FT
PLEASE READ CAREFULLY BEFORE ASSEMBLY

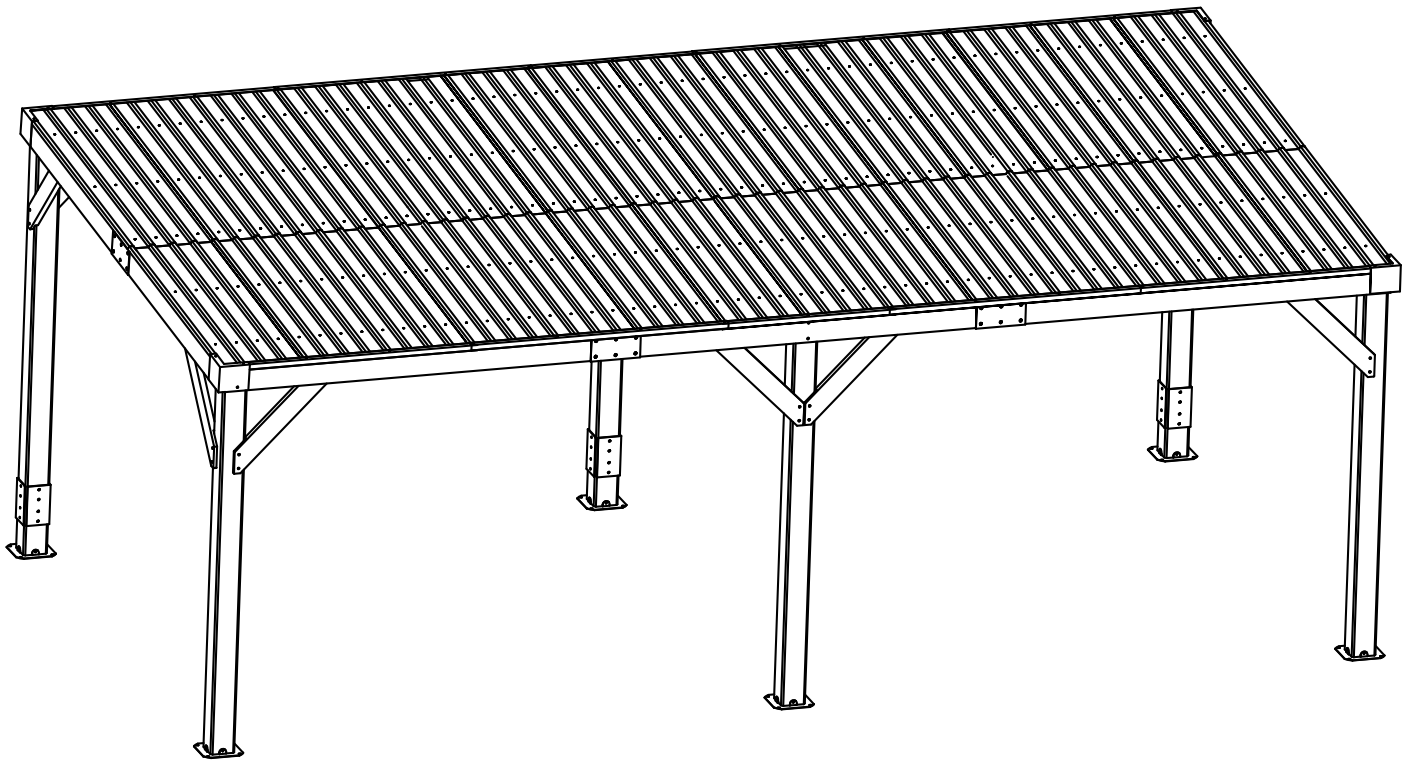

SKU:
YGZ100-1A1A1 (BOX 1/5)
YGZ100-1A1A2 (BOX 2/5)
YGZ100-1A1A3 (BOX 3/5)
YGZ100-1A1A4 (BOX 4/5)
YGZ100-1A1A5 (BOX 5/5)

Arrive in 5 separate boxes and may not be part of the same shipment;
Please install the product after receiving all the packages.
Email Address:support@amer-life.com
Service Time: 8 am - 5 pm (central time) Monday- Friday.
If no one picks up, please call several more times

Revision Date：2023122

Table of Contents

1.Notes·····page 1-2

2.Packing List·····page 3-6

3.Product Explosion Diagram
(Wooden Frame, Top Profiles, Boards)·····page 7-10

4.Installation Steps for Wooden Frame·····page 11-22

5.Installation Steps for Top Profiles·····page 23

6.Installation Steps for Boards·····page 24-28

BEFORE YOU START

Owner's Manual

Prior to installation, it is important that you contact your local government authority to determine if building approval is required. Study and understand this owner's manual.
Important information and helpful tips will make your construction easier and more enjoyable.

Assembly instructions

Instructions are supplied in this manual and contain all appropriate information for your building model. Review all instructions before you begin. During assembly, follow the step sequence carefully for correct results .Please be aware: **this unit takes two people about one full day to complete**.

Parts

Check to be sure that you have all the necessary parts for the building.
Separate contents of the carton by the part number while reviewing parts list.
Familiarize yourself with the hardware and fasteners for easier use during construction. These are packaged within the carton. Note that extra fasteners have been supplied for your convenience.

TOOLS MY REQUIRED

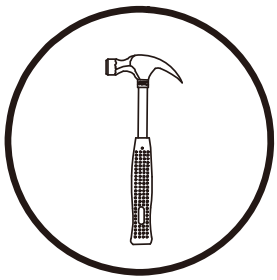

Hammer

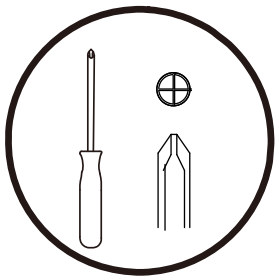

Screwdriver

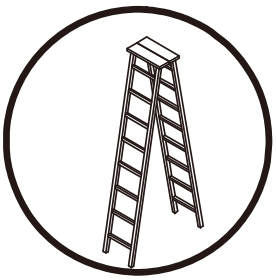

Ladder

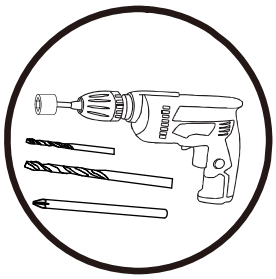

Electric screw driver

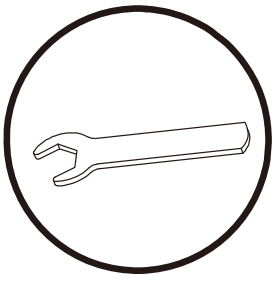

Wrench



This identifies information that requires special attention. Improper assembly could lead to an unsafe or dangerous condition.

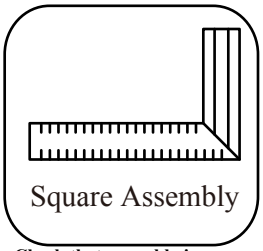

Square Assembly

Check that assembly is square before tightening bolts.

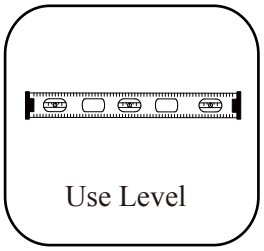

Use Level

Check that set or assembly is properly level before proceeding.



Measure Distance

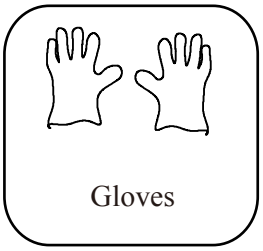

Gloves

IMPORTANT

How many people needed for the installation work
Requires Four people and take 7-10 hours for installation.

PLAN AHEAD

Site Selection

l Avoid overhanging trees as much as possible as leaves will make regular cleaning necessary and broken branches are a potential hazard.

l Small trees, bushes or fences nearby can be helpful, acting as a wind break.

Site Preparation

The site must be prepared so that the base of the shed is level all round and checking with a spirit level is required.

The base can be constructed by treated timber or concrete, in order to stop the moisture getting into the shed.

The shed is not designed to be built onto lawn directly. Also the ground will get muddy during rainy days.

If a concrete pad is made, it is important that this slopes towards the edges to prevent water ingress.

Time must be allowed for any concrete or cement to dry before building the shed on top.

Bases can also be constructed from bricks, blocks, or mounted on a concrete pad.

The bricks or blocks should be cemented onto firm and level concrete footings and the greenhouse frame drilled and screwed to the base.

IMPORTANT NOTES:

Find someone to help you: it is much easier with someone to hold parts, pass tool sect. Also some steps require two people to lift structures together. This is not very heavy work so would suit most able-bodied people.

Allow plenty of time: rushing often causes errors and the re-doing of incorrect assemblies. If you have never built a shed before, it can take most of a day to carefully complete the construction.

Have the right tools to hand.

Safety clothing as recommended in the 'Tools' section.

Ideally let out the parts and check that all are present before commencing construction. Lay on cloths or plastic sheets if there is any risk of scratching the parts.

Tighten all nuts carefully, being sure not to miss any. Check the frame is square and using a spirit level to check that it is upright.

For your safety concern,please do not stand under the metal shed in heavy wind or snow days.

For safety, please use expansion screws to reinforce the posts to the ground.

Please clear the snow off the roof in time for the heavy snowfall.

Make sure all screws are tightened before use.

Repeat to confirm all screws, buckles and straps every 90 days.

Please keep all screws loose during the assembly process and tighten them after completing the installation.

Do not use or store objects in the Metal Shed with open flames or flammable chemicals.

Please note that some parts have sharp edges and should be handled with gloves.

If any parts are missing, broken, damaged or worn, discontinue use of the product until repairs are made or factory replacement parts are installed.

Installation of the product in a manner that does not conform to the manufacturer's instructions may result in the loss of the warranty policy for this product.

BOX1

A	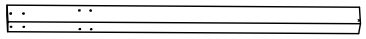	1
A1	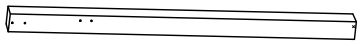	1
A2	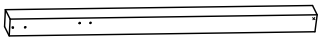	1
A3	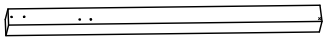	1

BOX2

A4		1
A5		1
B		2
B1		2
B2		2

BOX3

A6		3
C		1
C1	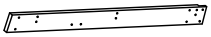	1
C2		1
C3		1
E	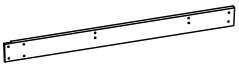	2
E1	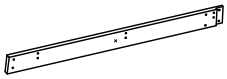	2
E2	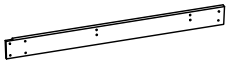	1
E3	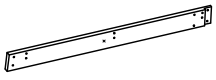	1

F		4
F1		4
F2	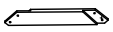	1
F3		1
F4		1
F5	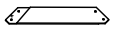	1
X	 M8*45	20
X1	 M8*20	54
X2	 M8*35	48
		1

BOX4

D		20
G		2
G1		2
G2		2
G3		4
J		4
L		6
M		40
M1		4

M2		2
M3		2
M5	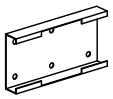	6
M6	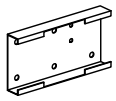	3
M7		6
M8		2
M9		1
M10		1

BOX4

X3		280
X4	 4*15	32
X5	 M6*15	44
X6	 4.2*10	314
X7	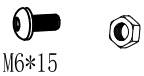 M6*15	80
X8	 M6*20	48
X9	 M6*42	42
	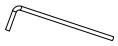	12
		12
		1
	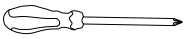	1

BOX5

Y		2
Y1	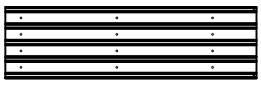	24
Y2	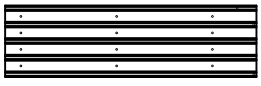	2

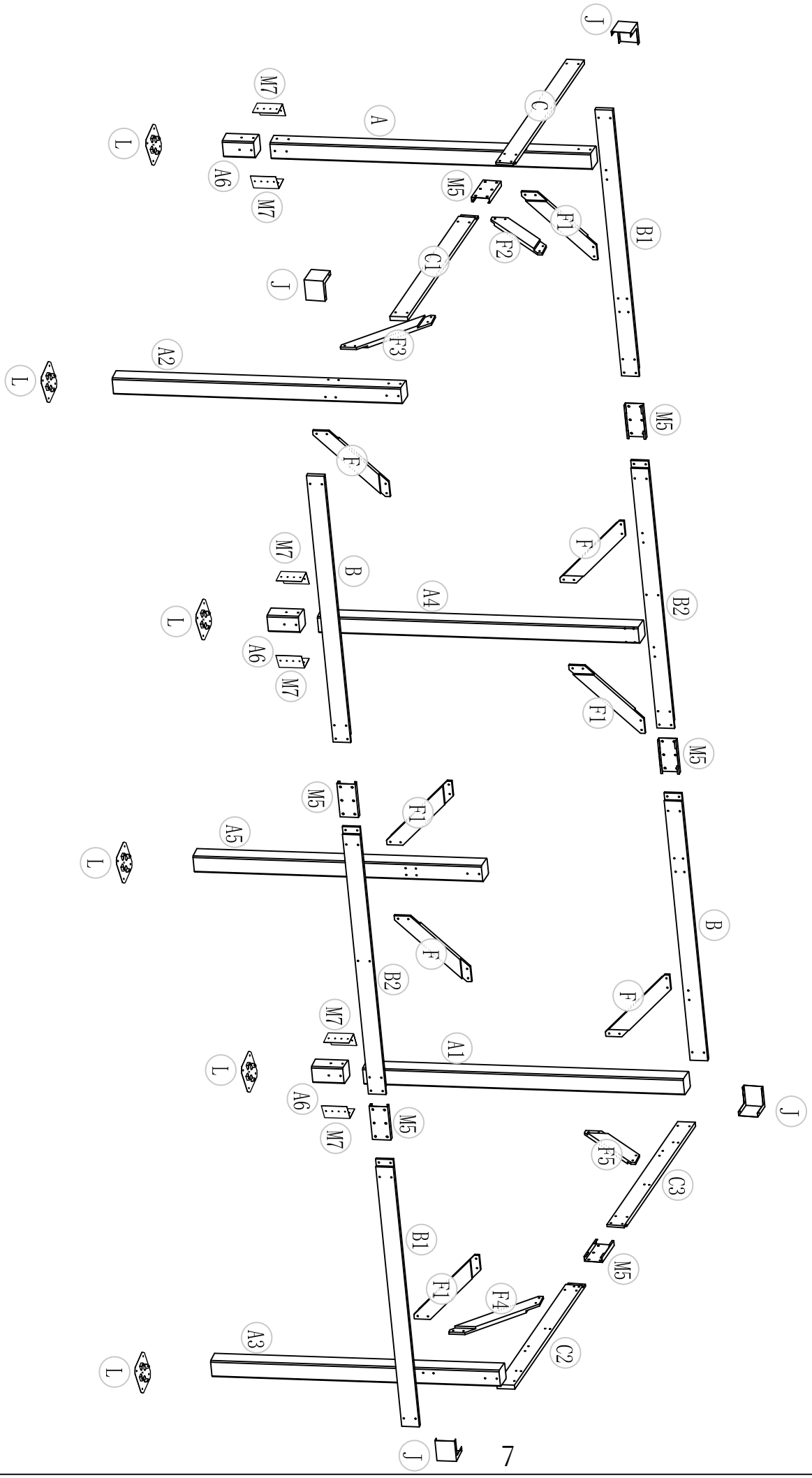
J
M7
C
A
L
A6
M7
M5
F1
B1
F2
C1
J
F3
A2
L
M5
F
M7
B
F
A4
B2
L
A6
M7
F1
M5
M5
F1
A5
L
B
F
B2
F
M7
A1
L
J
A6
M5
M7
F5
C3
B1
M5
F1
F4
A3
C2
L
J

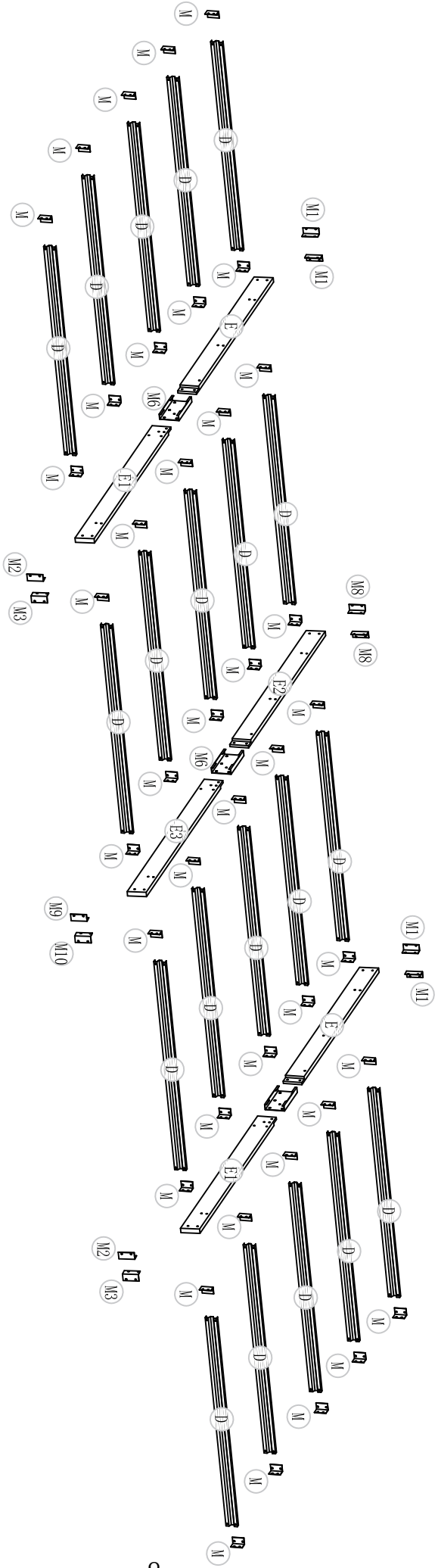
M
D
M1
E
M6
E1
M2
M3
M8
E2
E3
M9
M10
M11

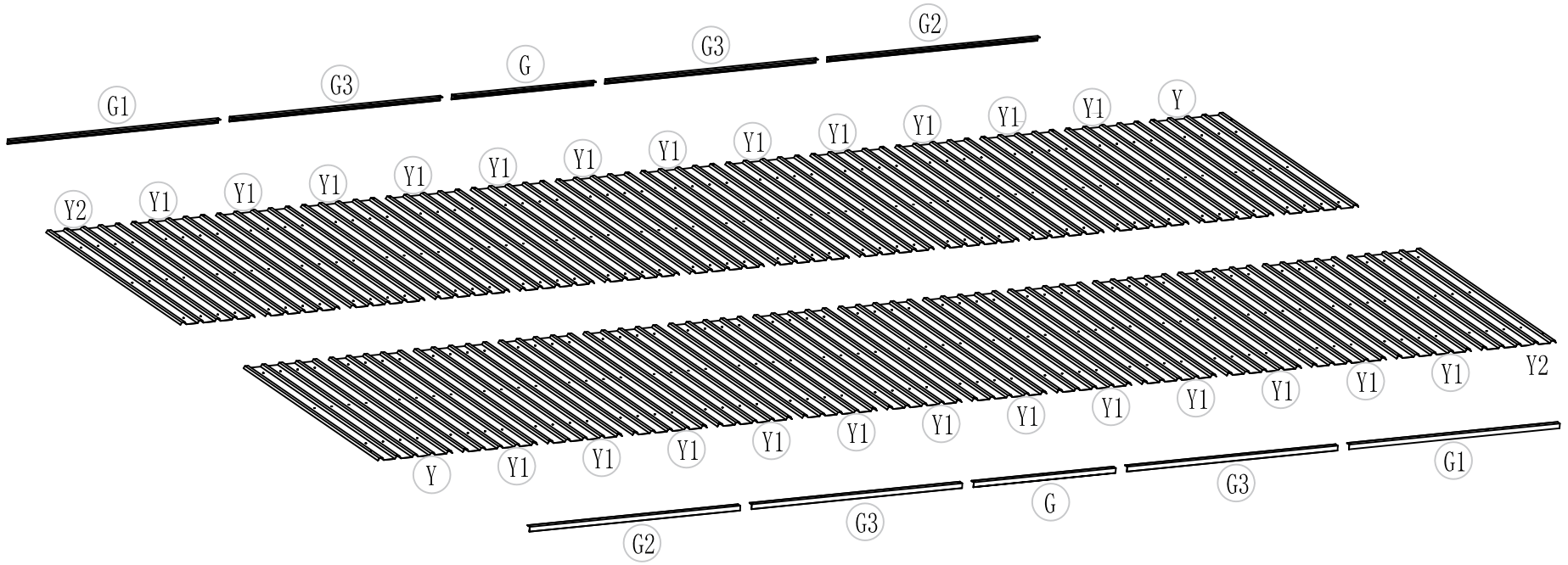
G2
G3
G
G3
G1
Y
Y1
Y1
Y1
Y1
Y1
Y1
Y1
Y1
Y1
Y1
Y2
Y2
Y1
Y1
Y1
Y1
Y1
Y1
Y1
Y1
Y1
Y1
Y1
Y1
Y1
Y
G1
G3
G
G3
G2

WARNING:
Do Not Install on goft or Uneven Groumd.
This gazebo is designed to be installed on a hard,level surface only (such as concrete ora solid patio). Installing the gazebo on soft or umeven groumd(e.g., grass or soil)can cause instability and increase the risk of tipping over.

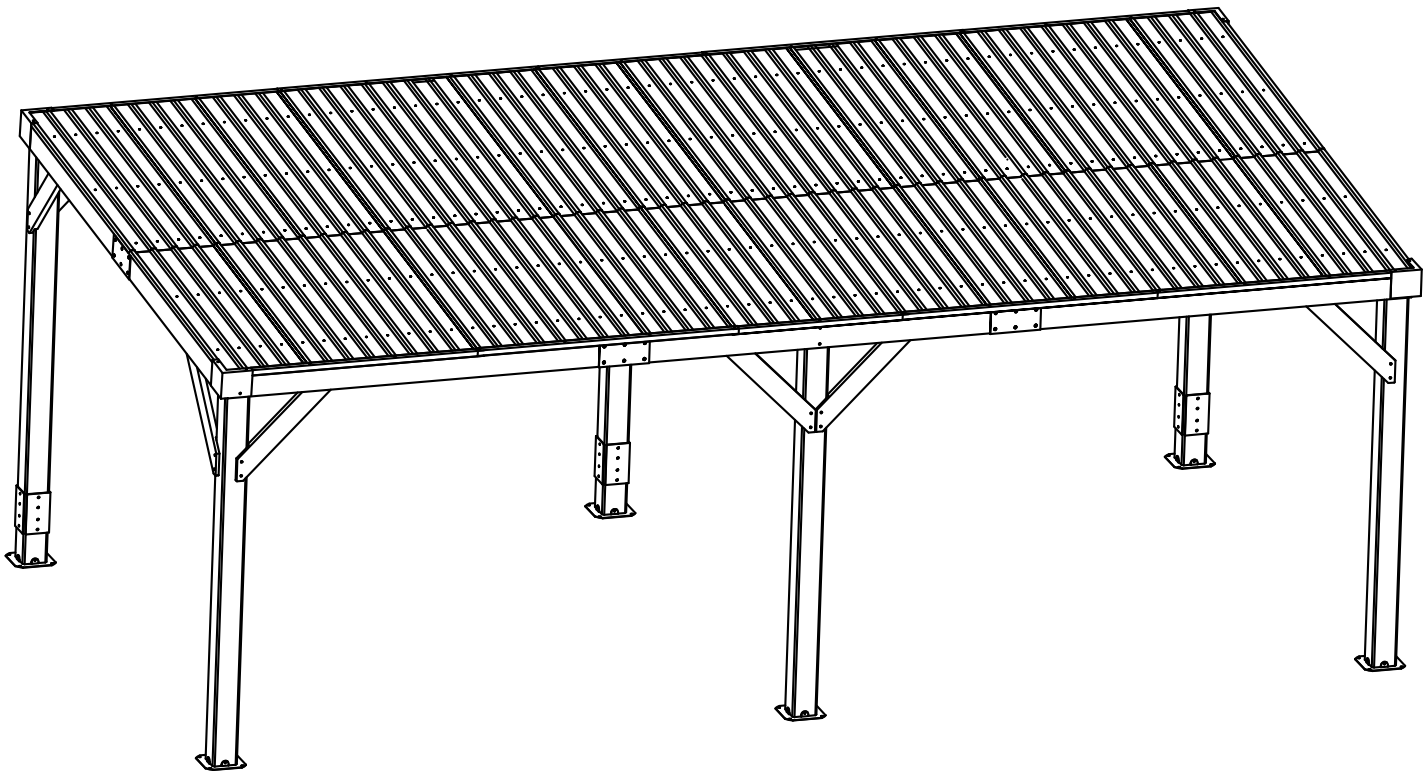

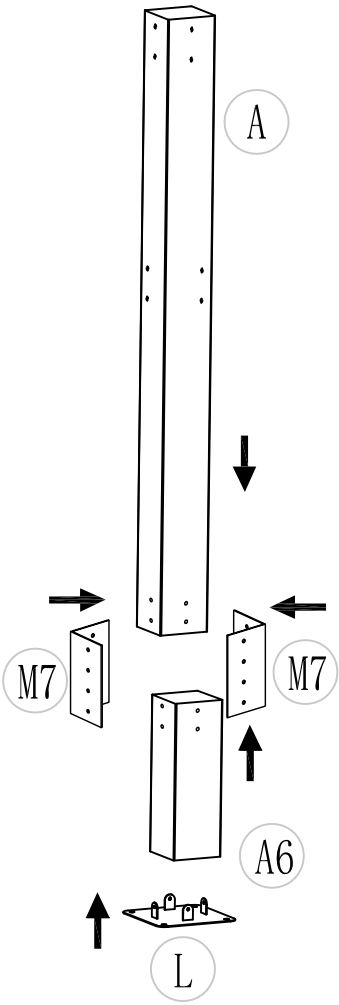

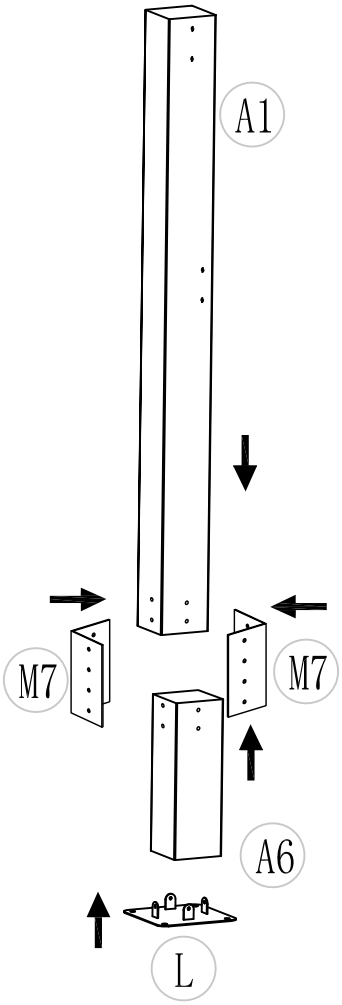

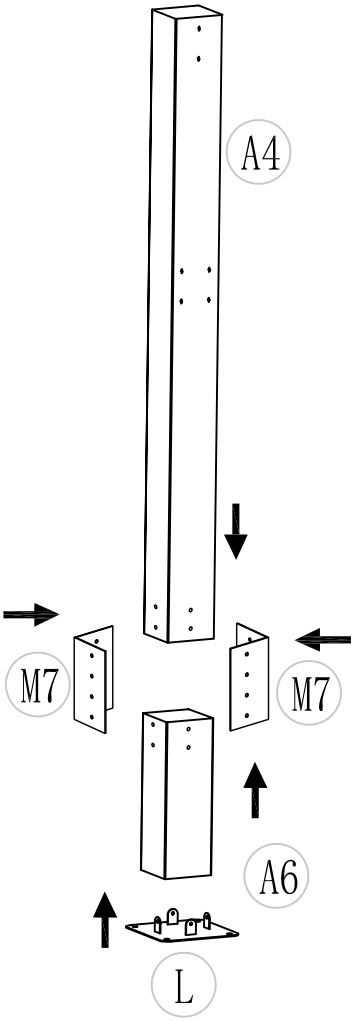

A		1
A1		1
A4		1
A6		3
L		3
M7		6
X4	4*15	12
X8	M6*20	48

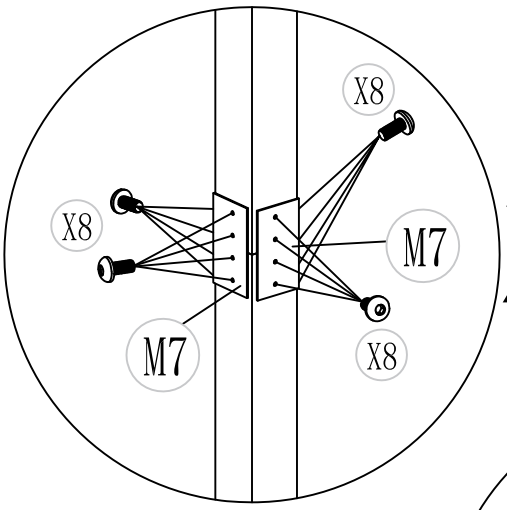

X3

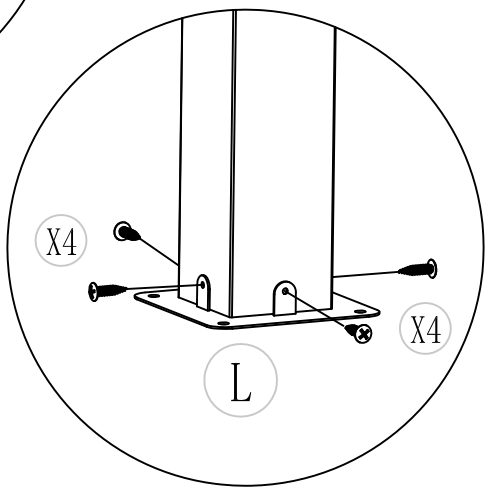

X3

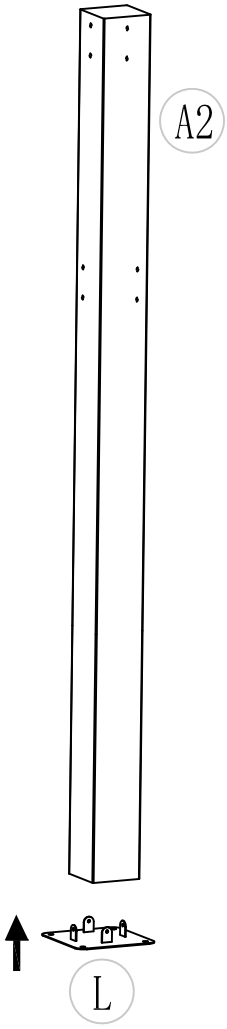

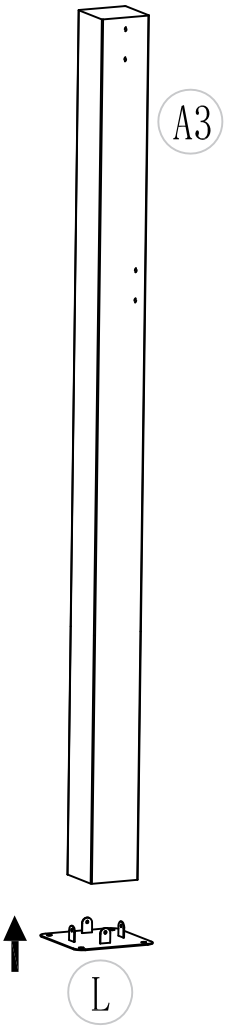

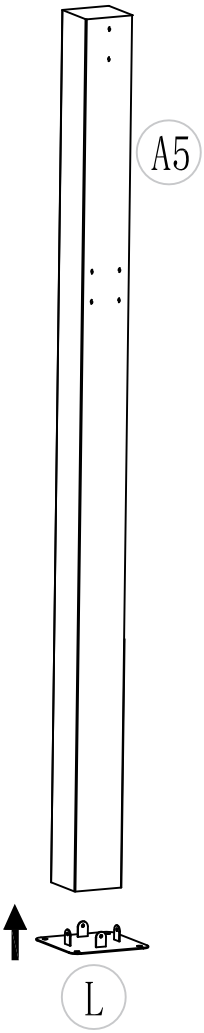

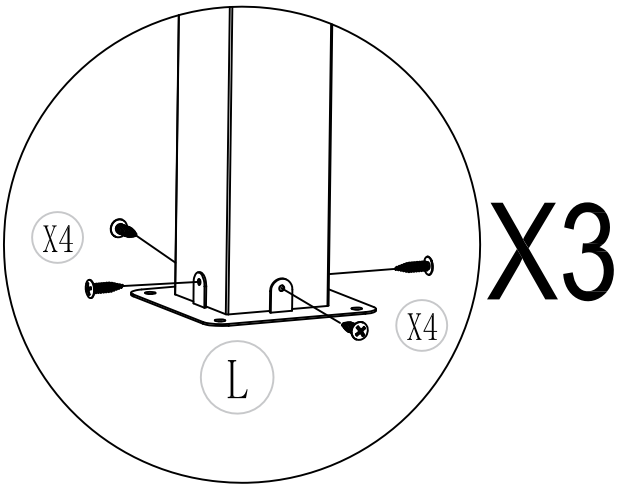

A2	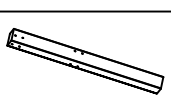	1
A3		1
A5	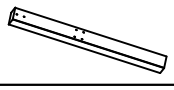	1
L		3
X4	 4*15	12

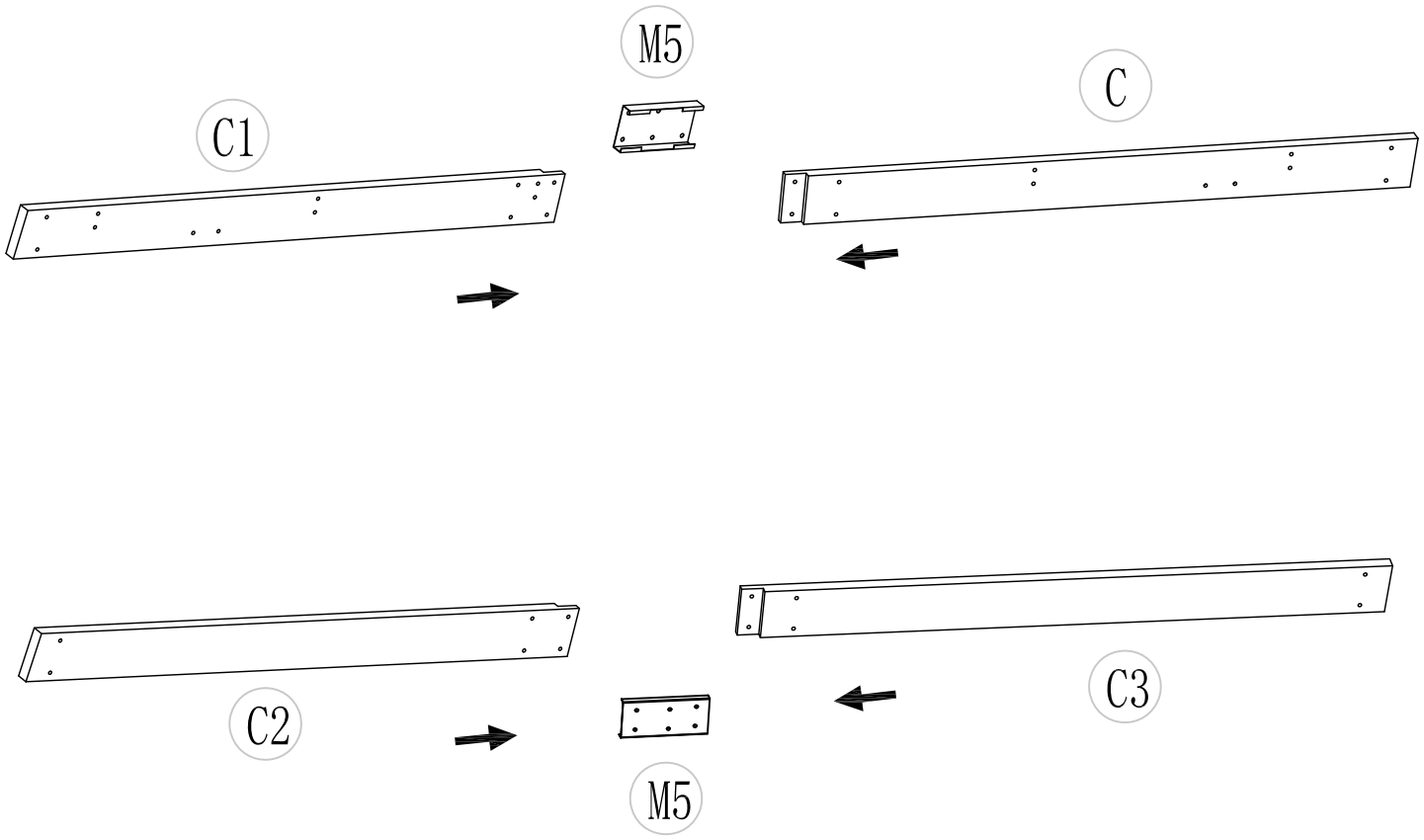

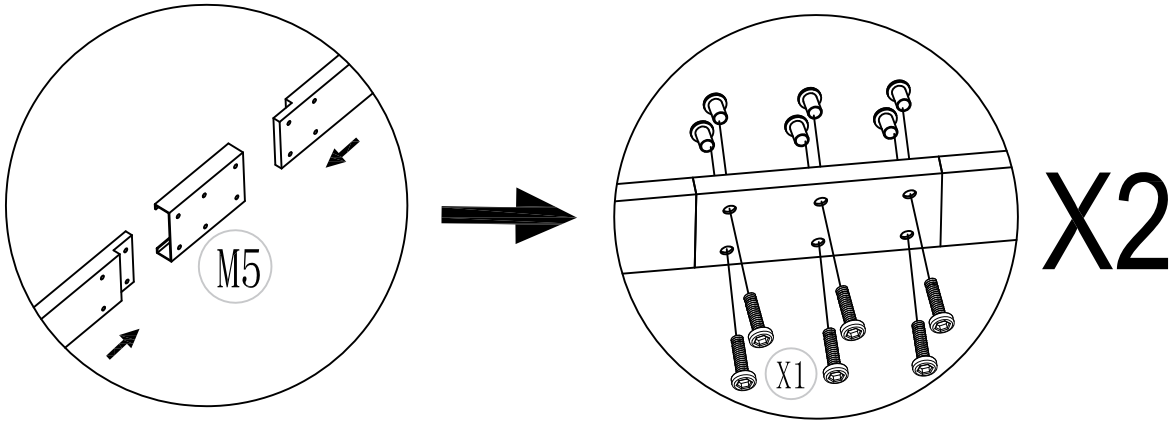

C	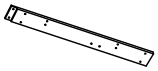	1
C1	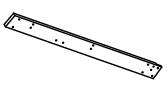	1
C2		1
C3		1
M5	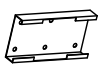	2
X1	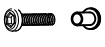 M8*20	12

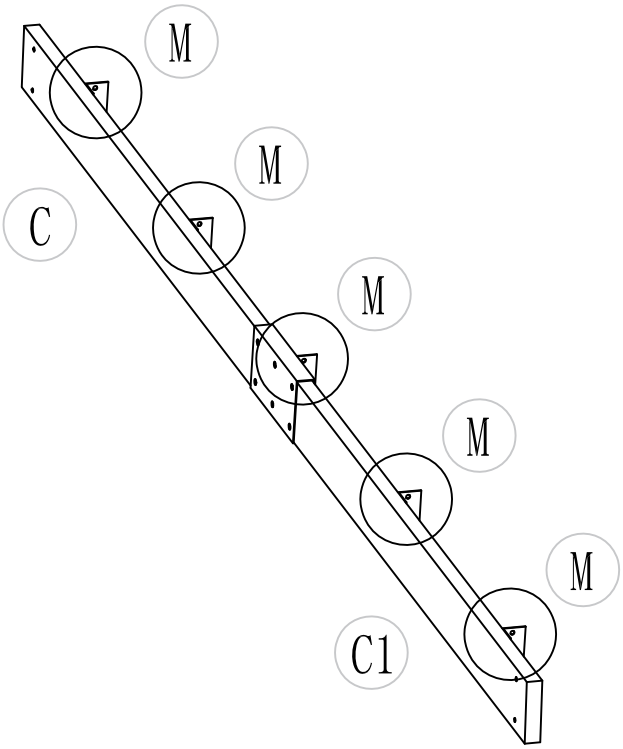

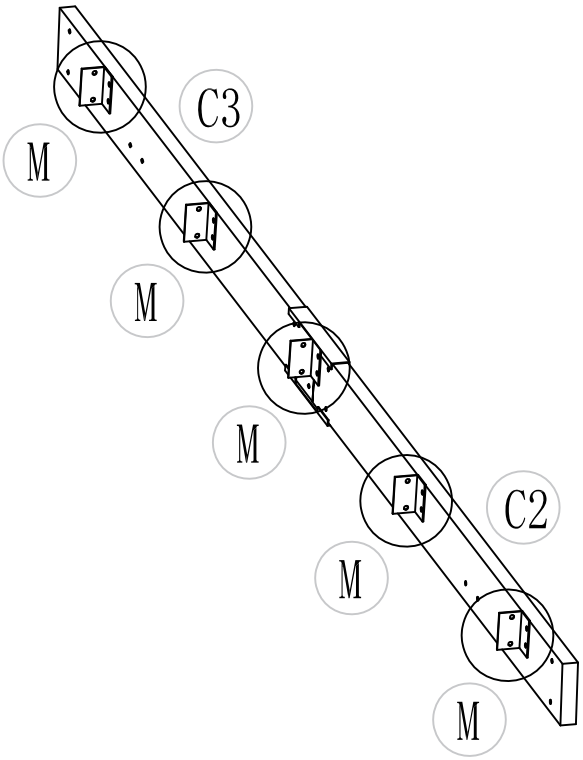

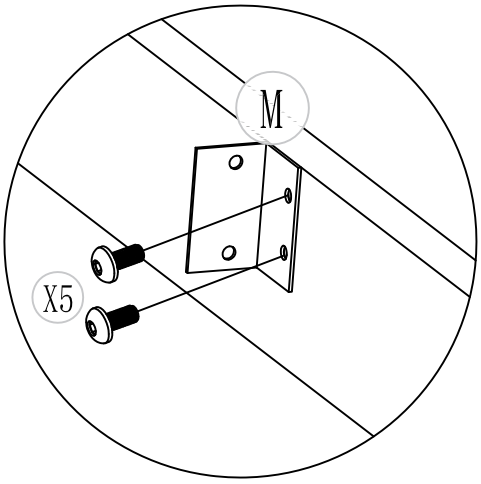

X10

M		10
X5	 M6*15	20

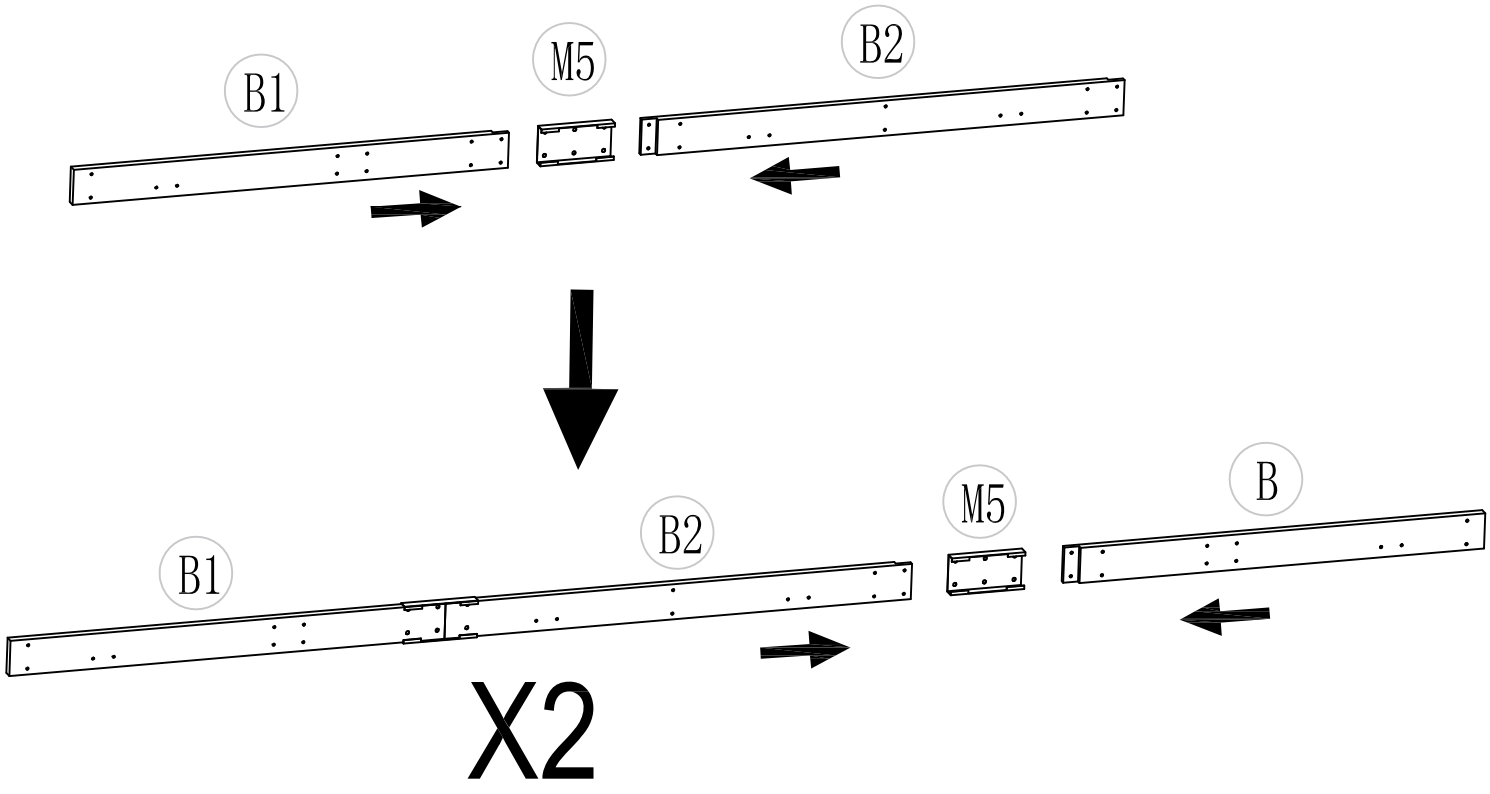

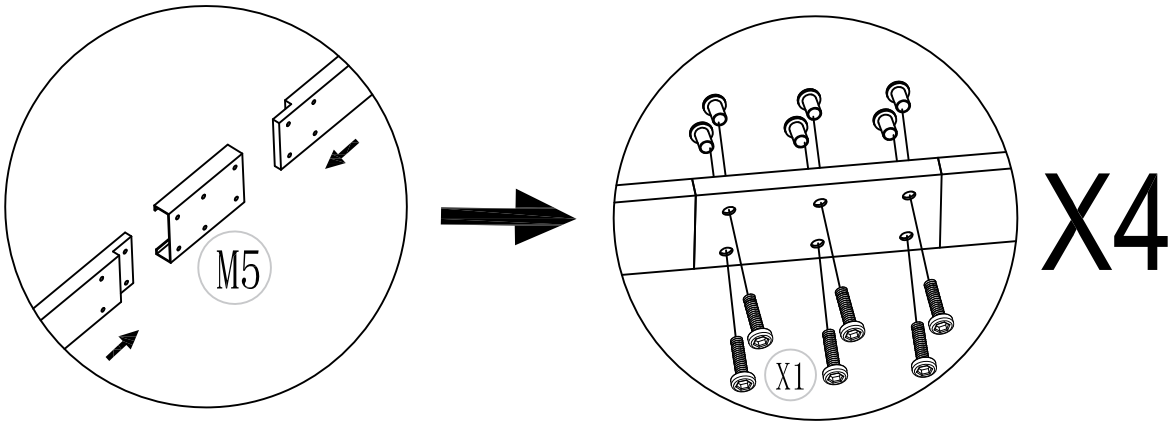

B	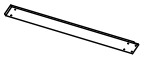	2
B2		2
B1	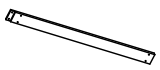	2
M5	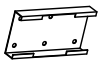	4
X1	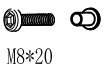 M8*20	24

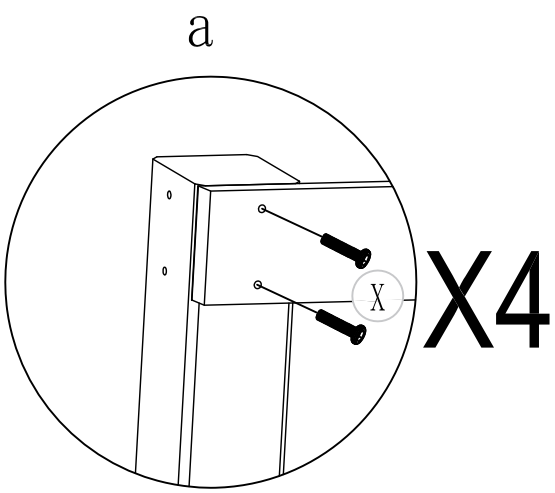

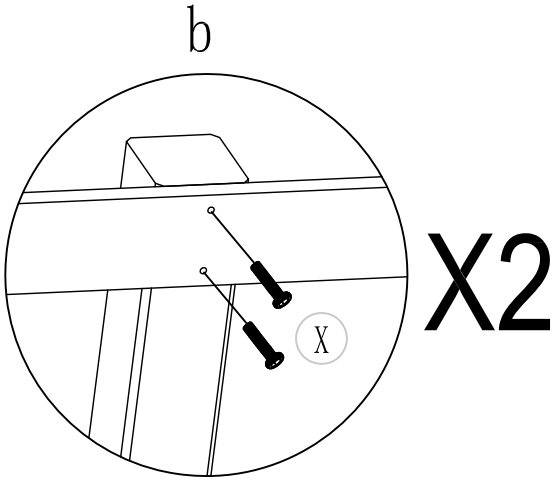

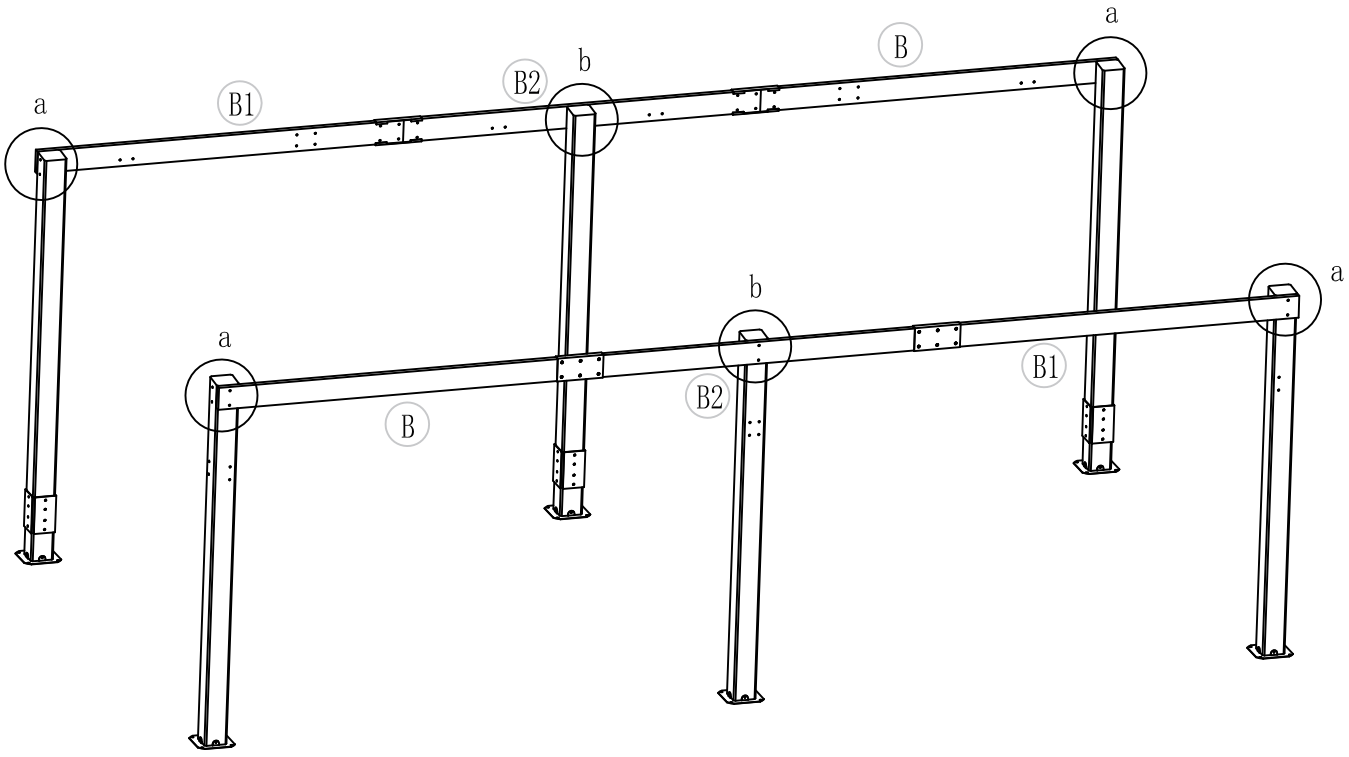

X	M8*45	12

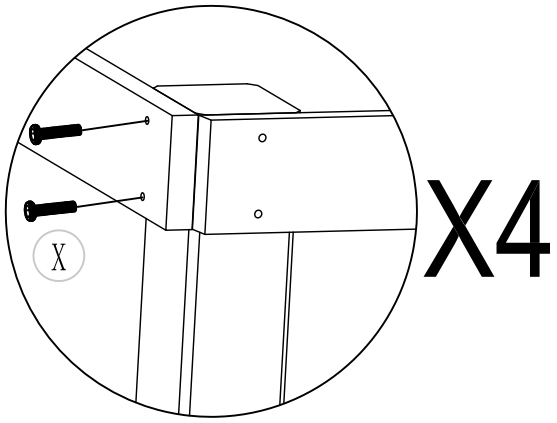

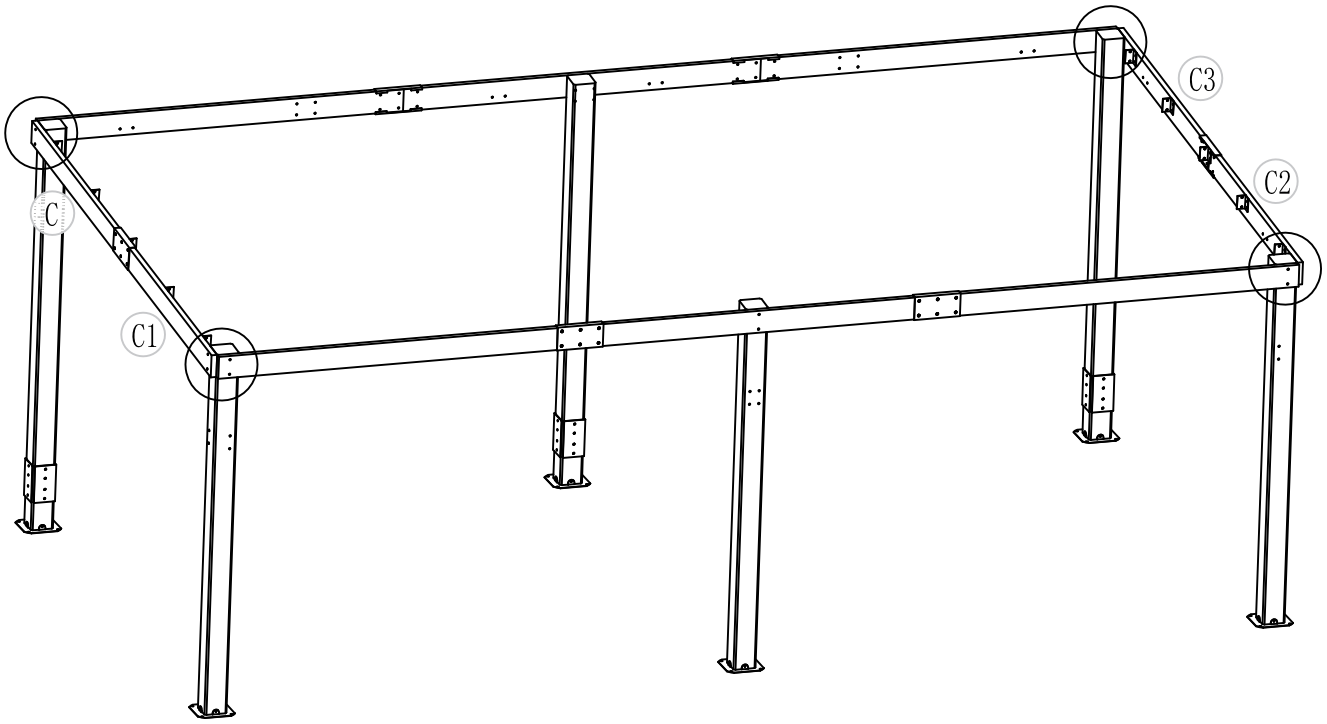

X	M8*45	8

a = b

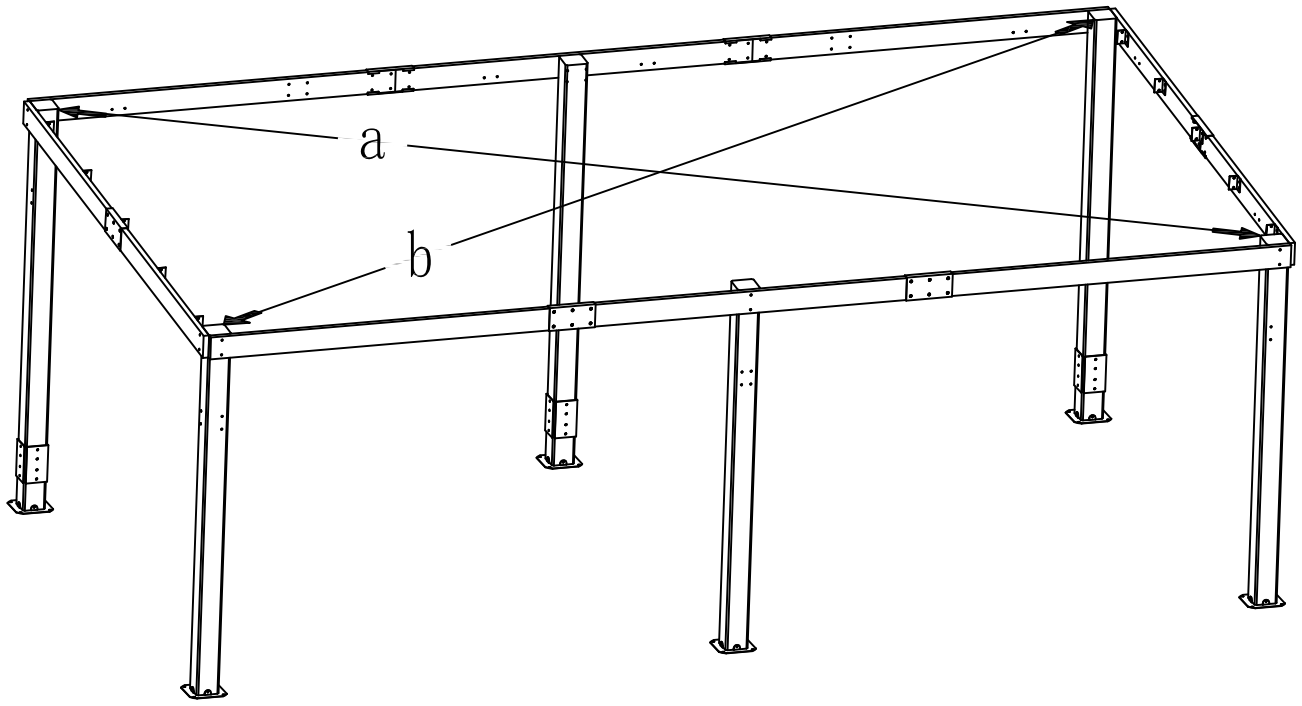

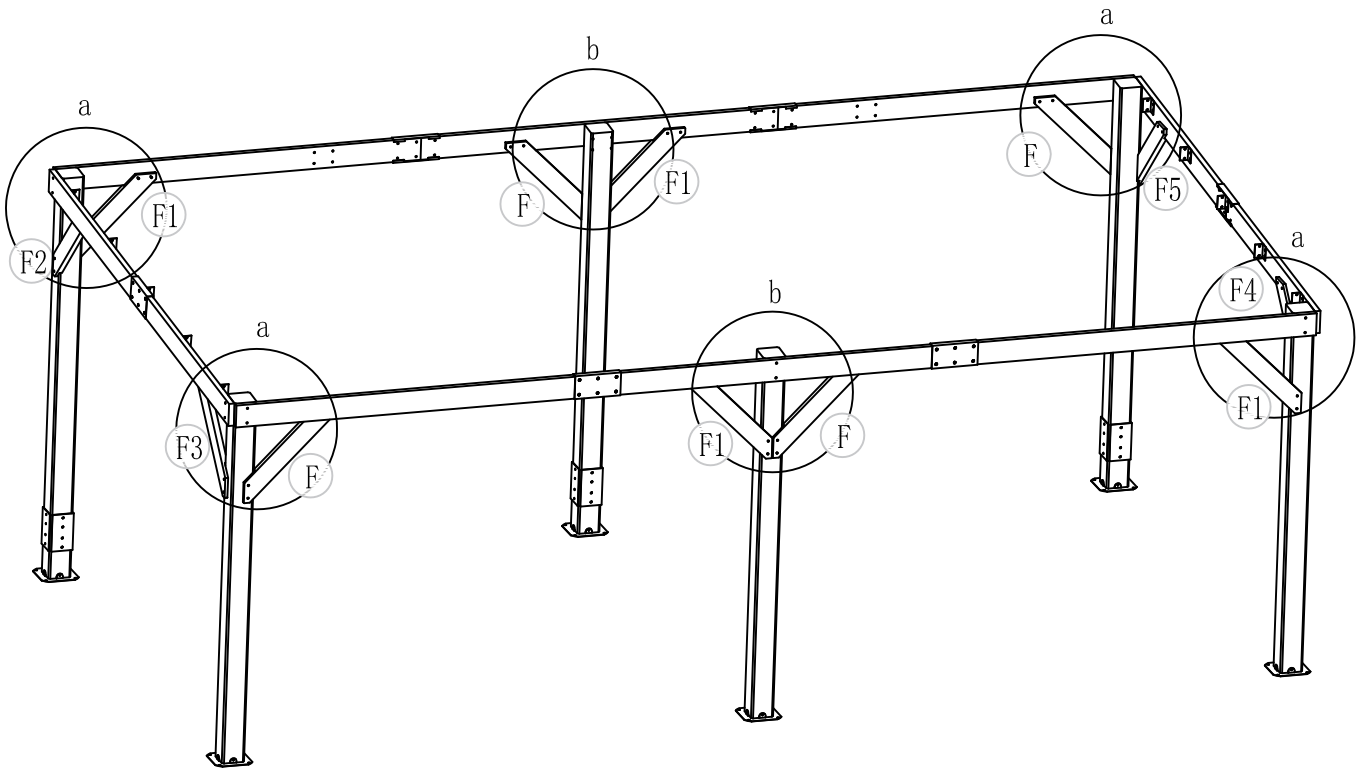

Tighten the screws to 70% first.Once all screws are in place, then fully tighten them.

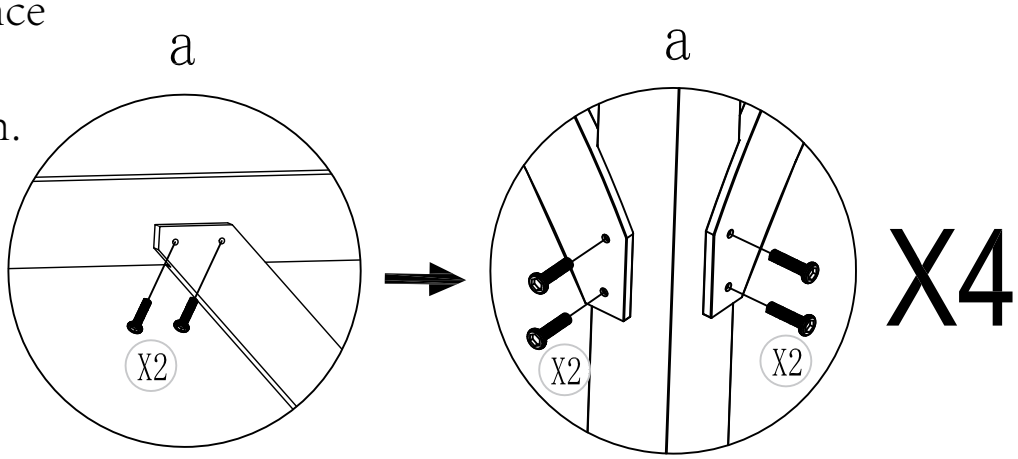

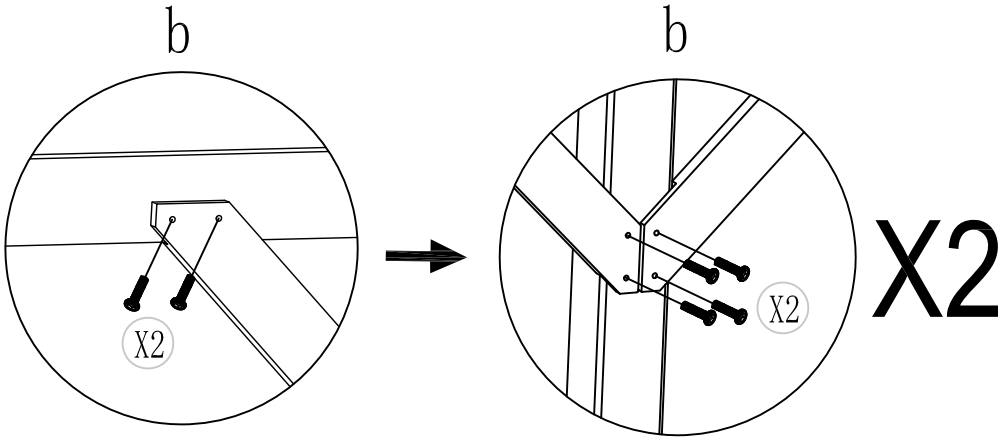

F	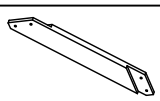	4
F1	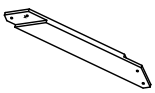	4
F2	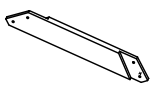	1
F3	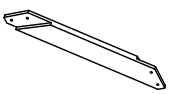	1
F4	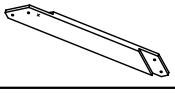	1
F5	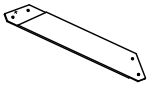	1
X2	 M8*35	48

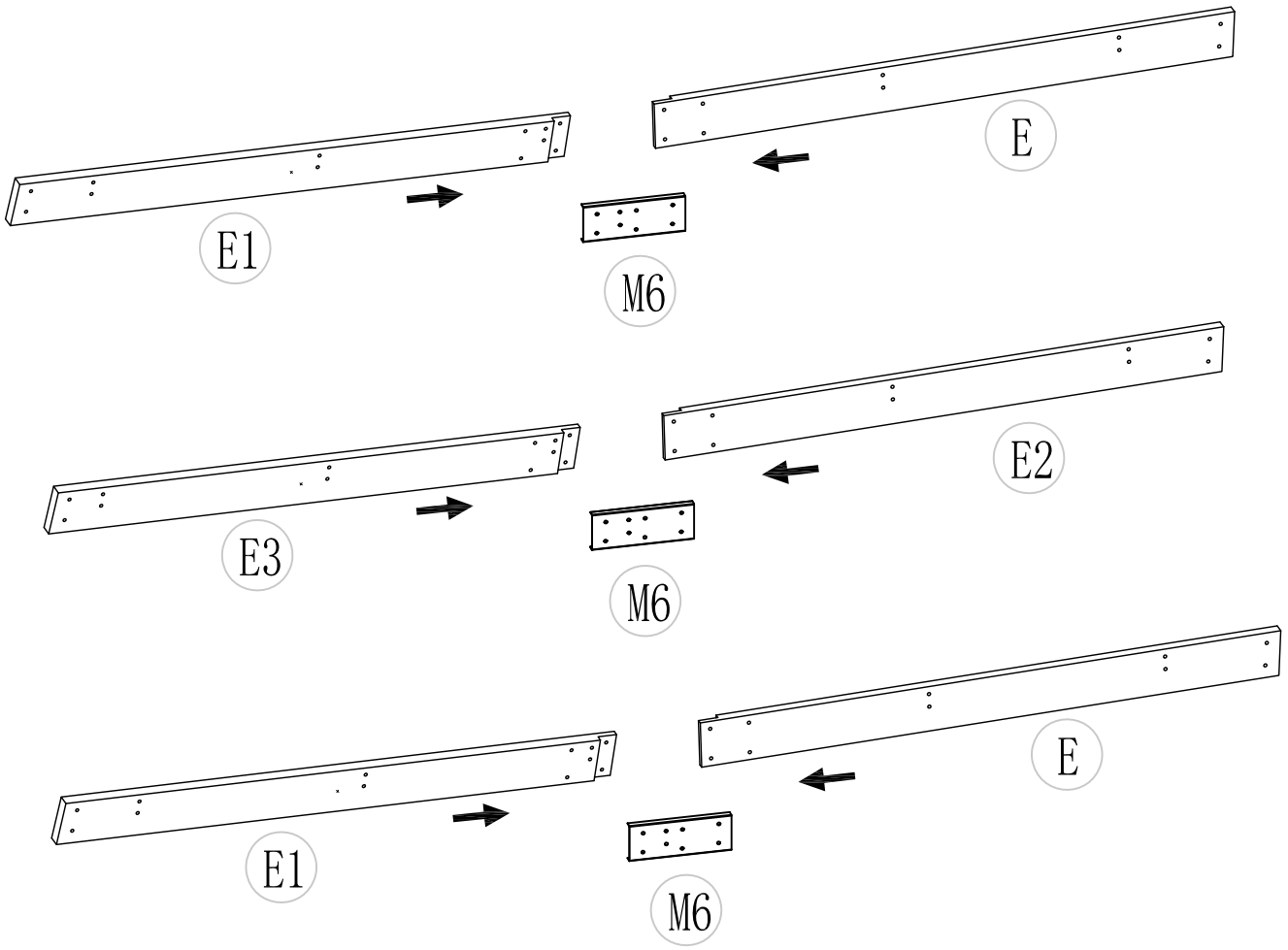

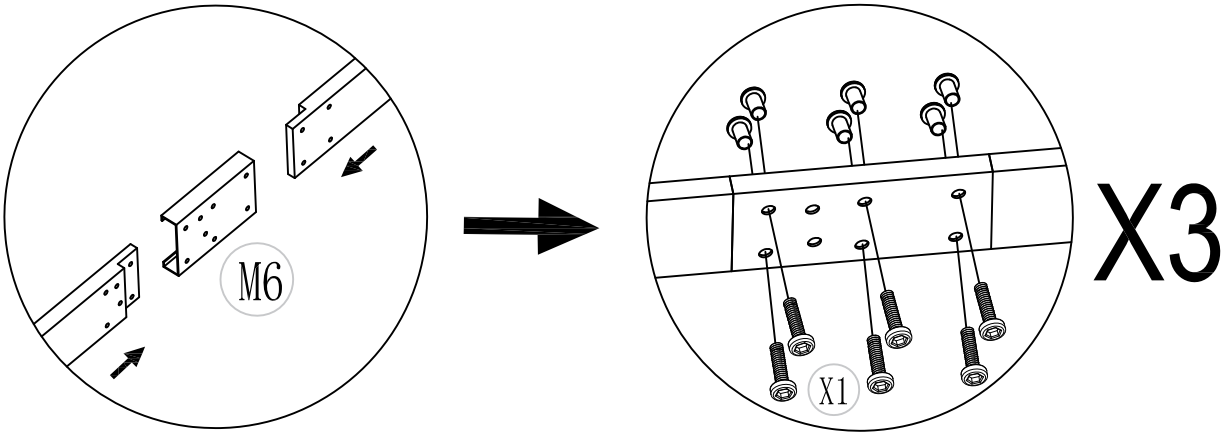

E		2
E1	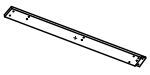	2
E2	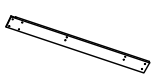	1
E3	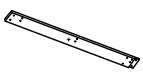	1
M6	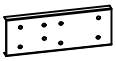	3
X1	 M8*20	18

a

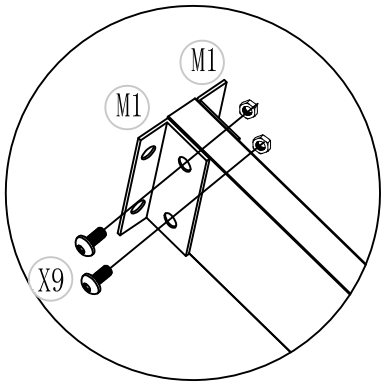

X2

c

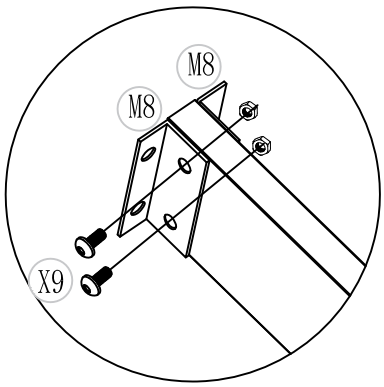

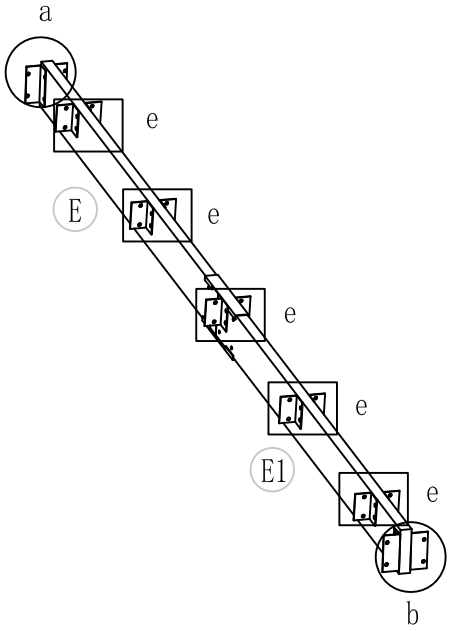

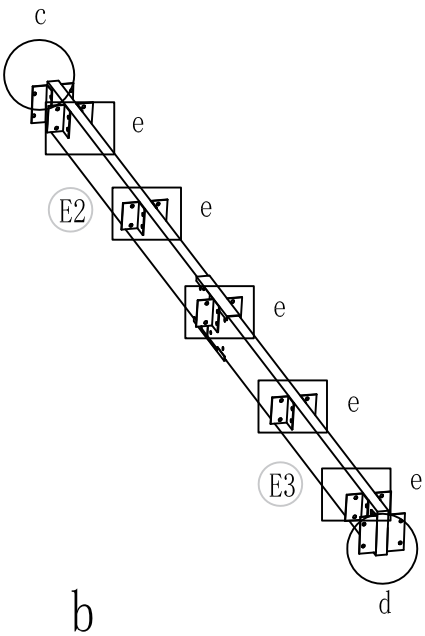

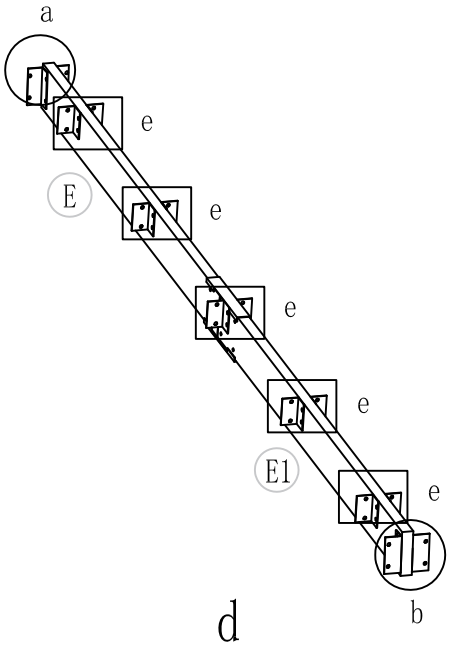

b

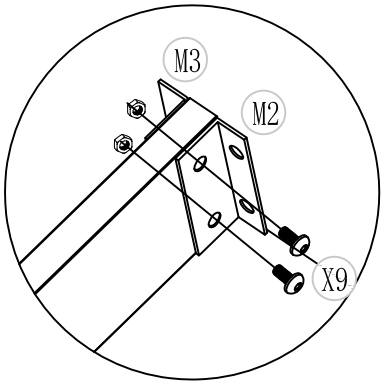

X2

d

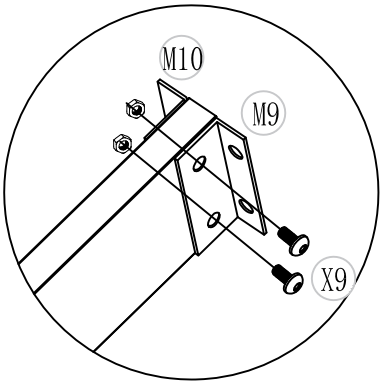

e

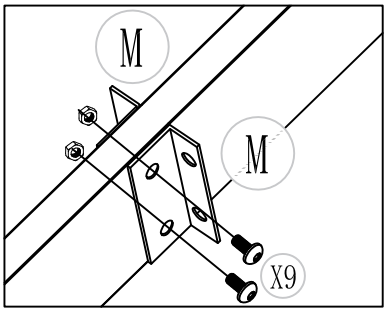

X15

M		30
M1		4
M2		2
M3		2
M8		2
M9		1
M10		1
X9	 M6*42	42

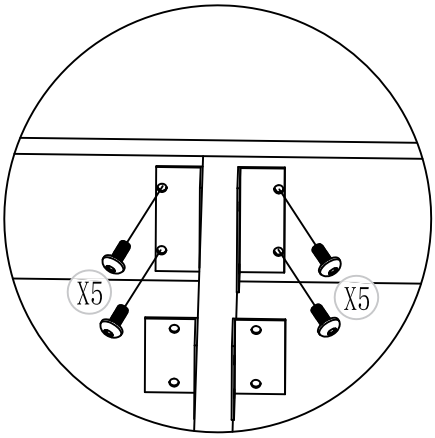

X6

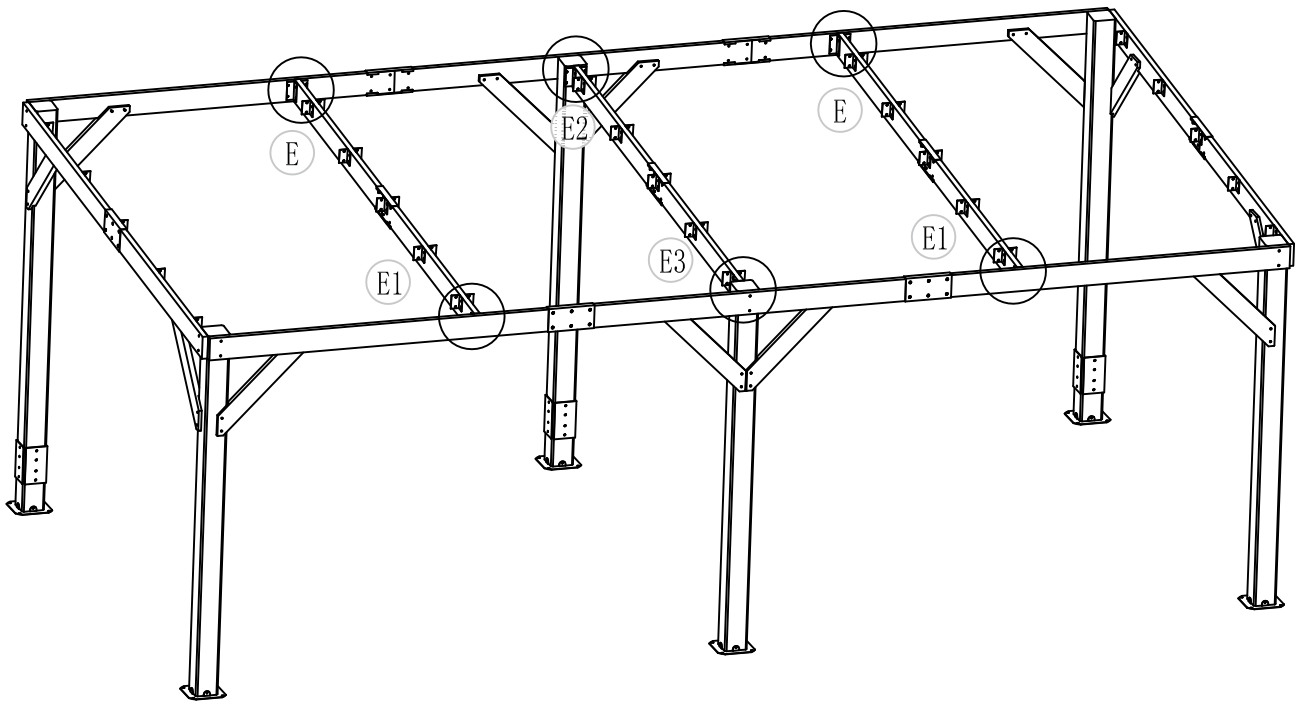

X5	M6*15	24

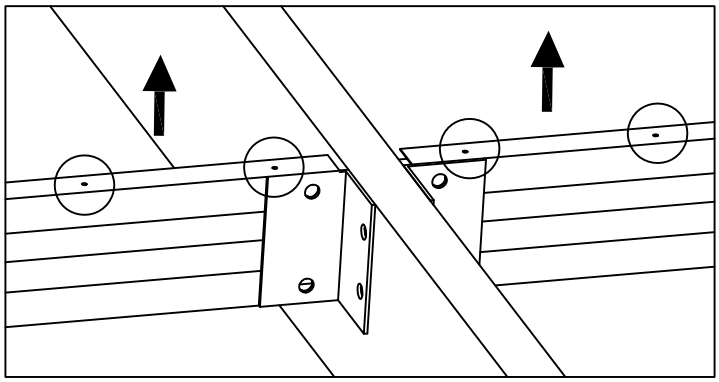

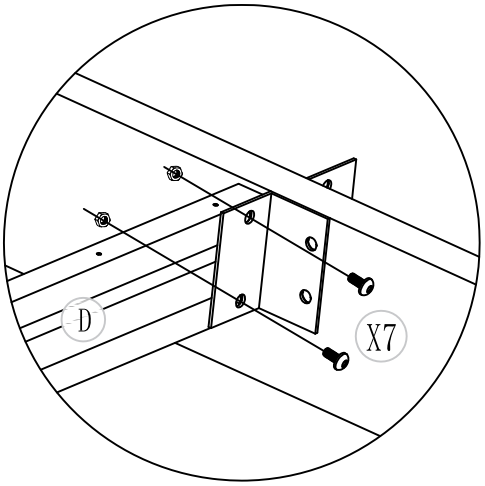

X40

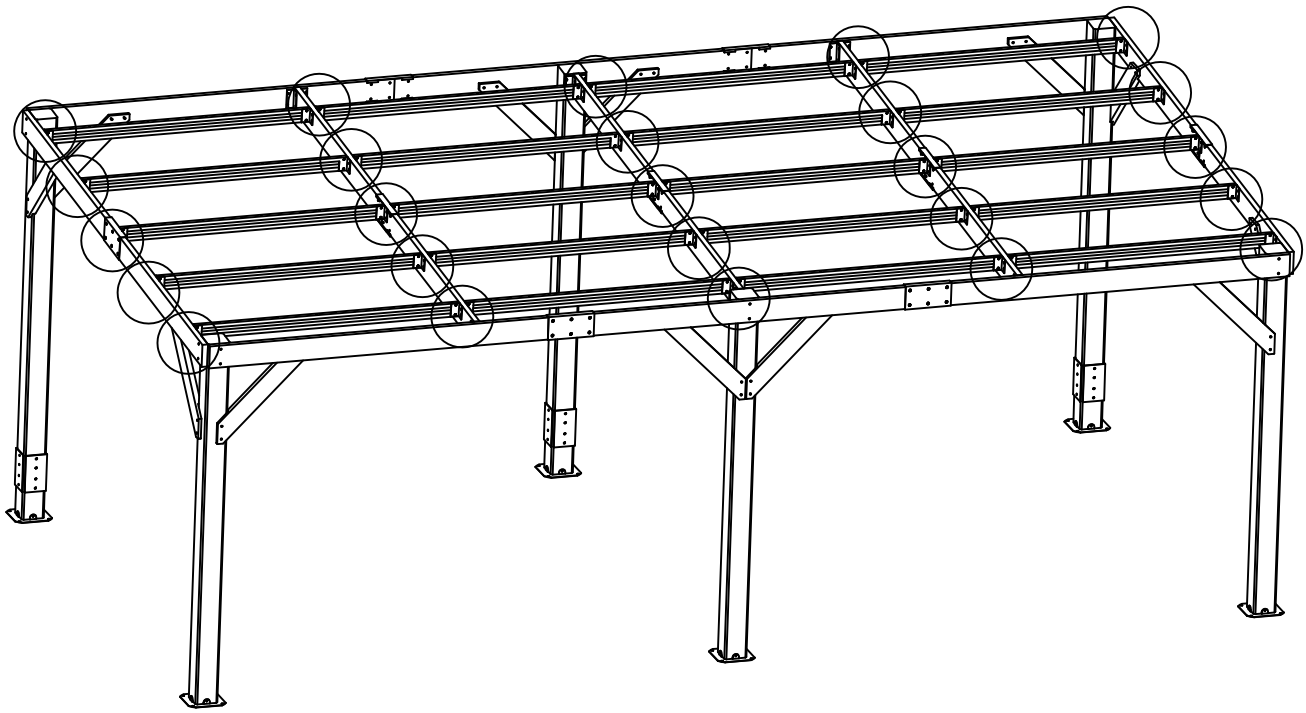

D		20
X7	M6*15	80

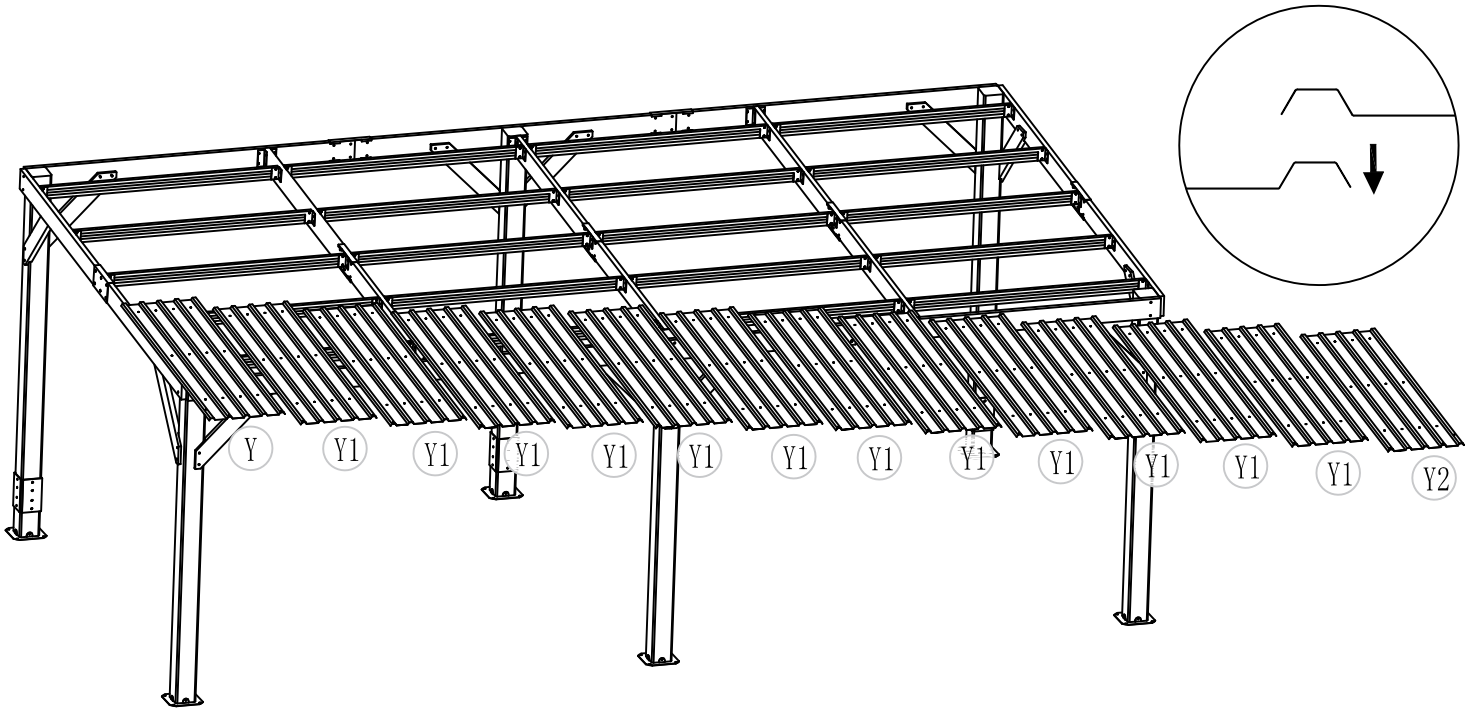

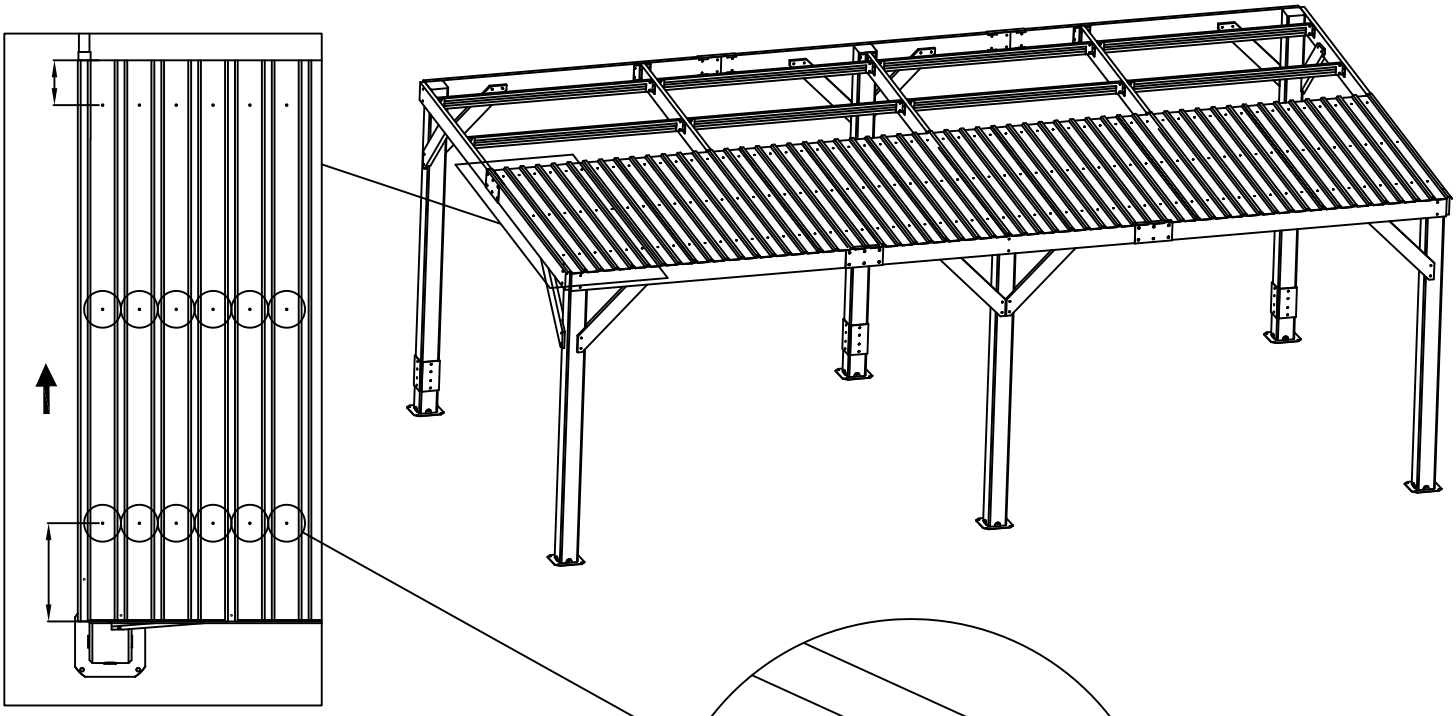

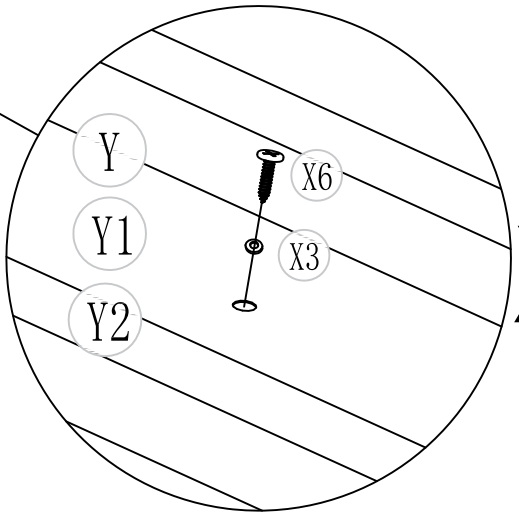

X112

Y		1
Y1		12
Y2		1
X3		112
X6	4.2*10	112

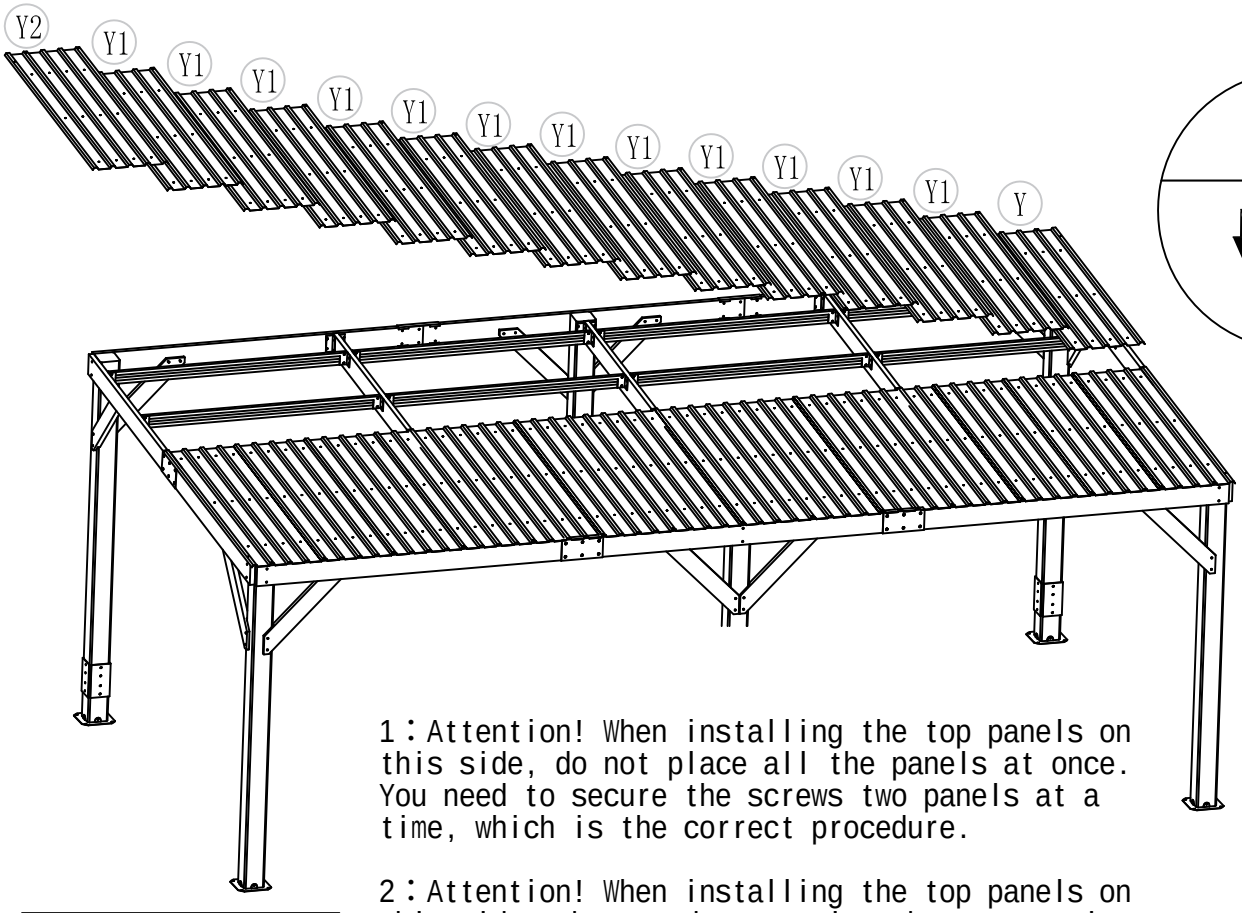

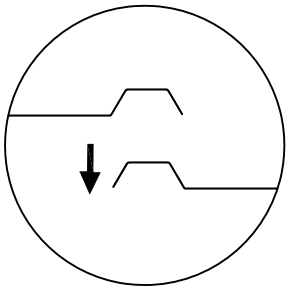

1：Attention! When installing the top panels on this side, do not place all the panels at once. You need to secure the screws two panels at a time, which is the correct procedure.

2：Attention! When installing the top panels on this side, they need to overlap the top panels on the other side before securing the screws. This is to prevent water leakage.

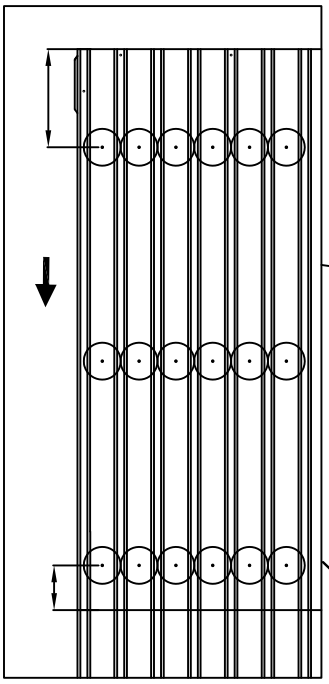

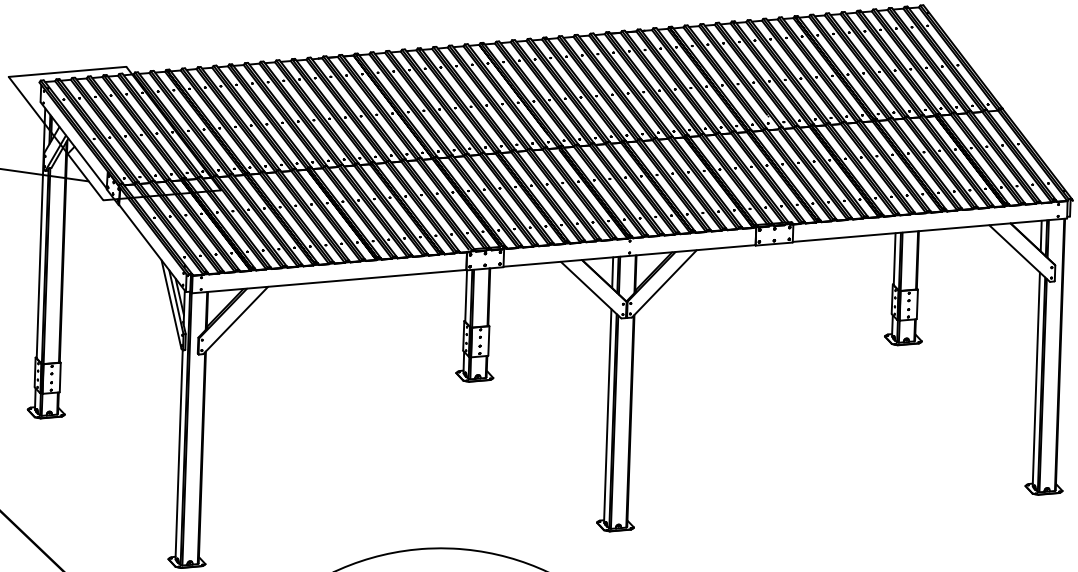

Y	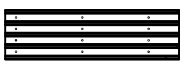	1
Y1		12
Y2		1
X3		168
X6	 4.2*10	168

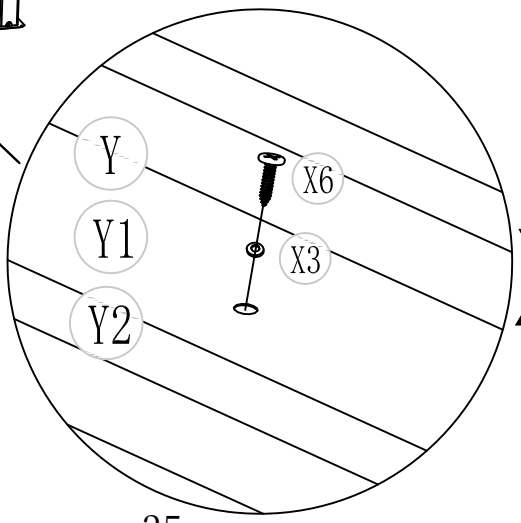

X168

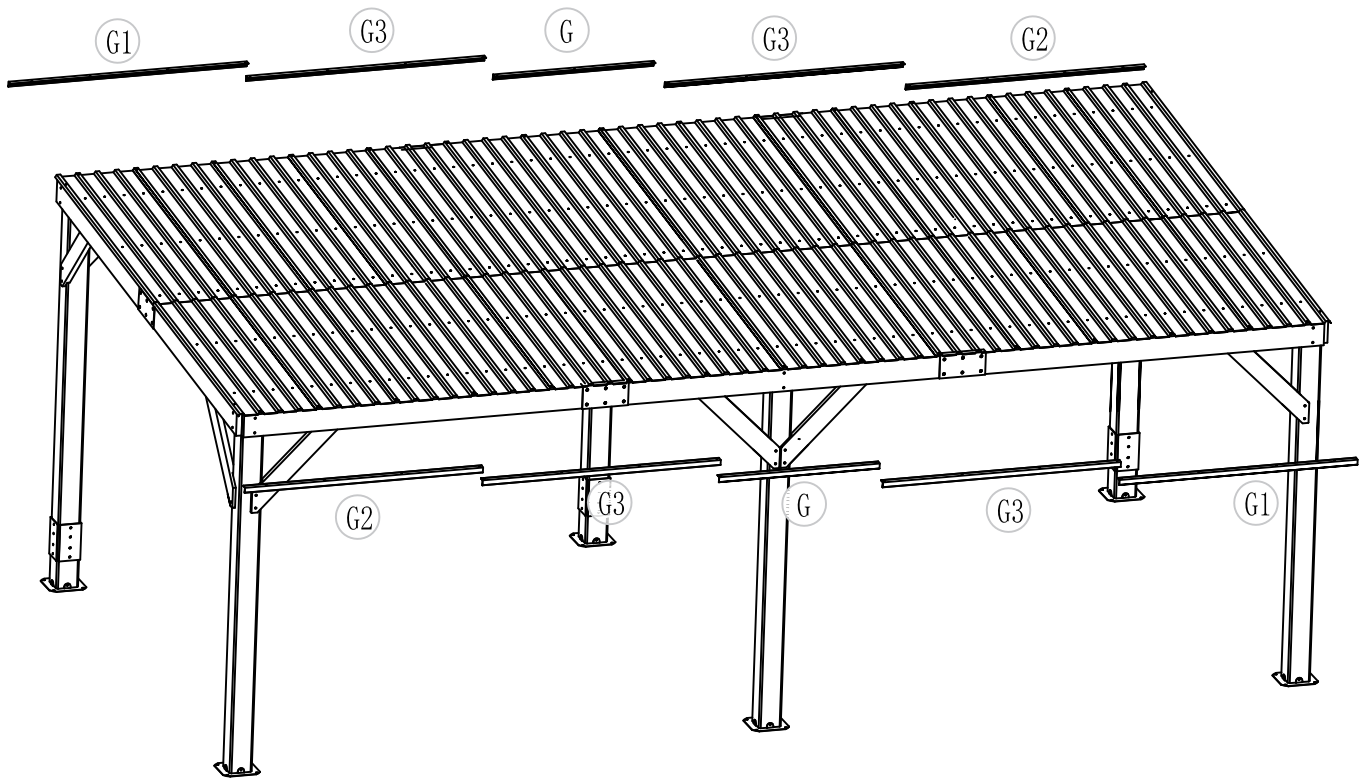

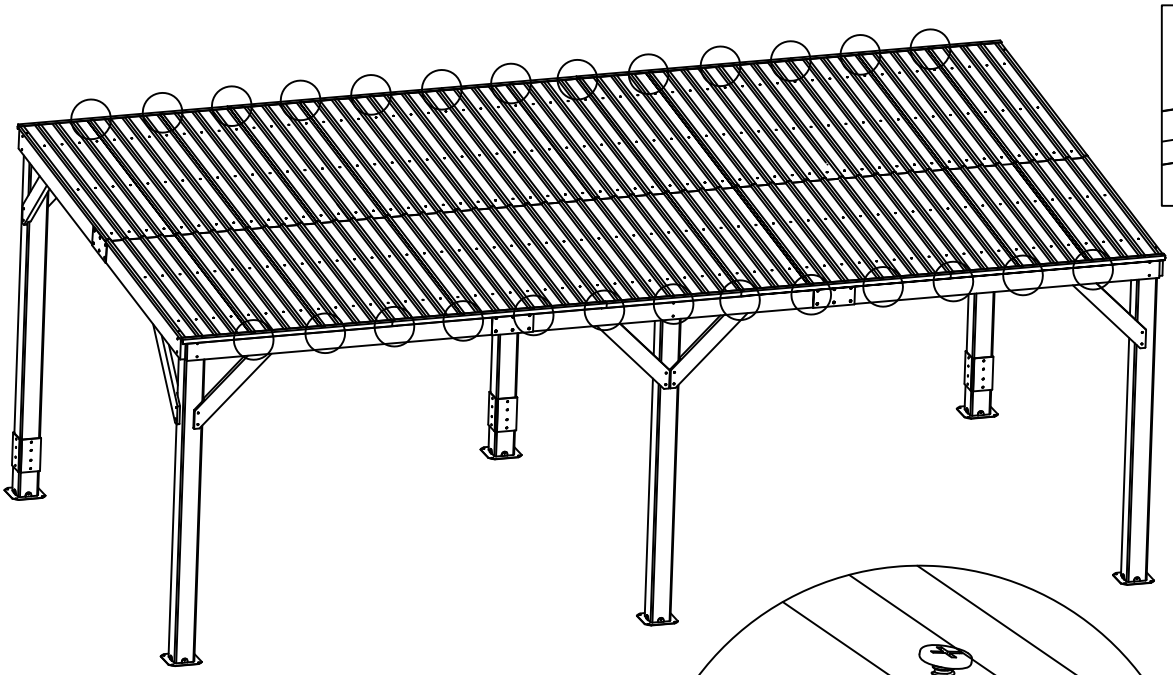

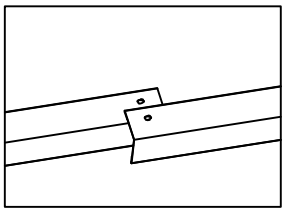

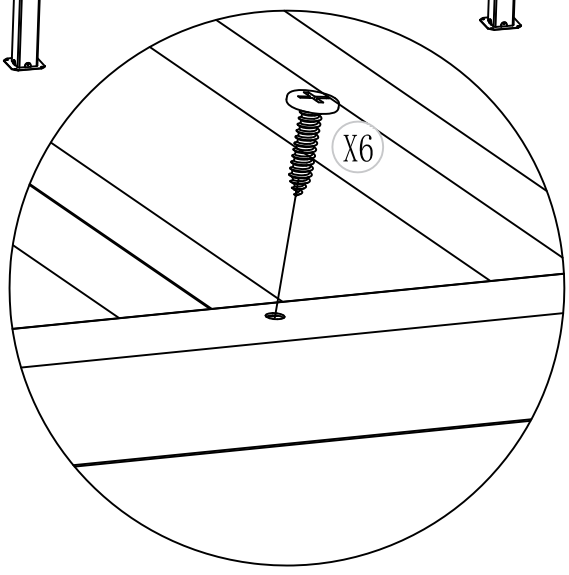

X26

G		2
G1		2
G2		2
G3		4
X6	4.2*10	26

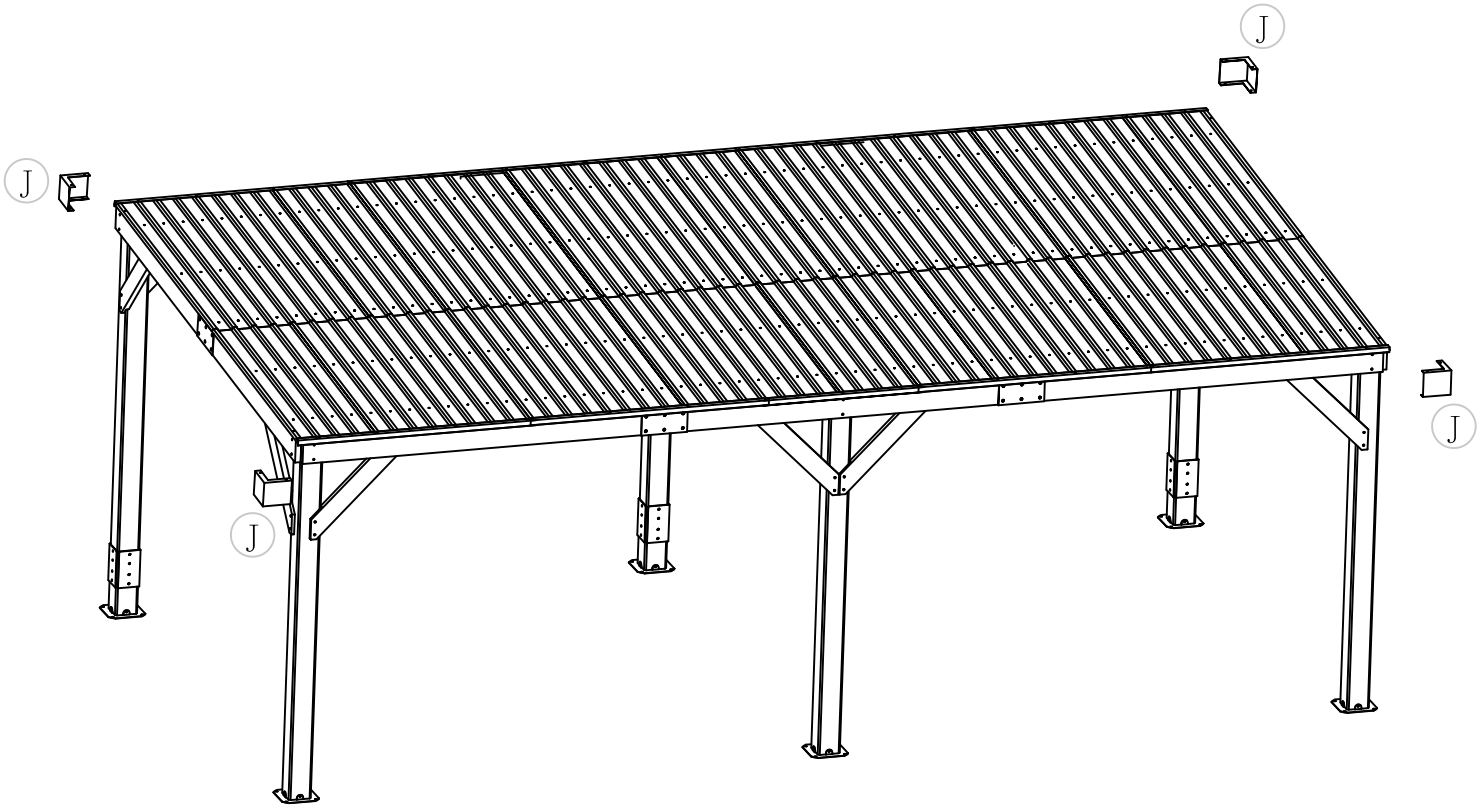

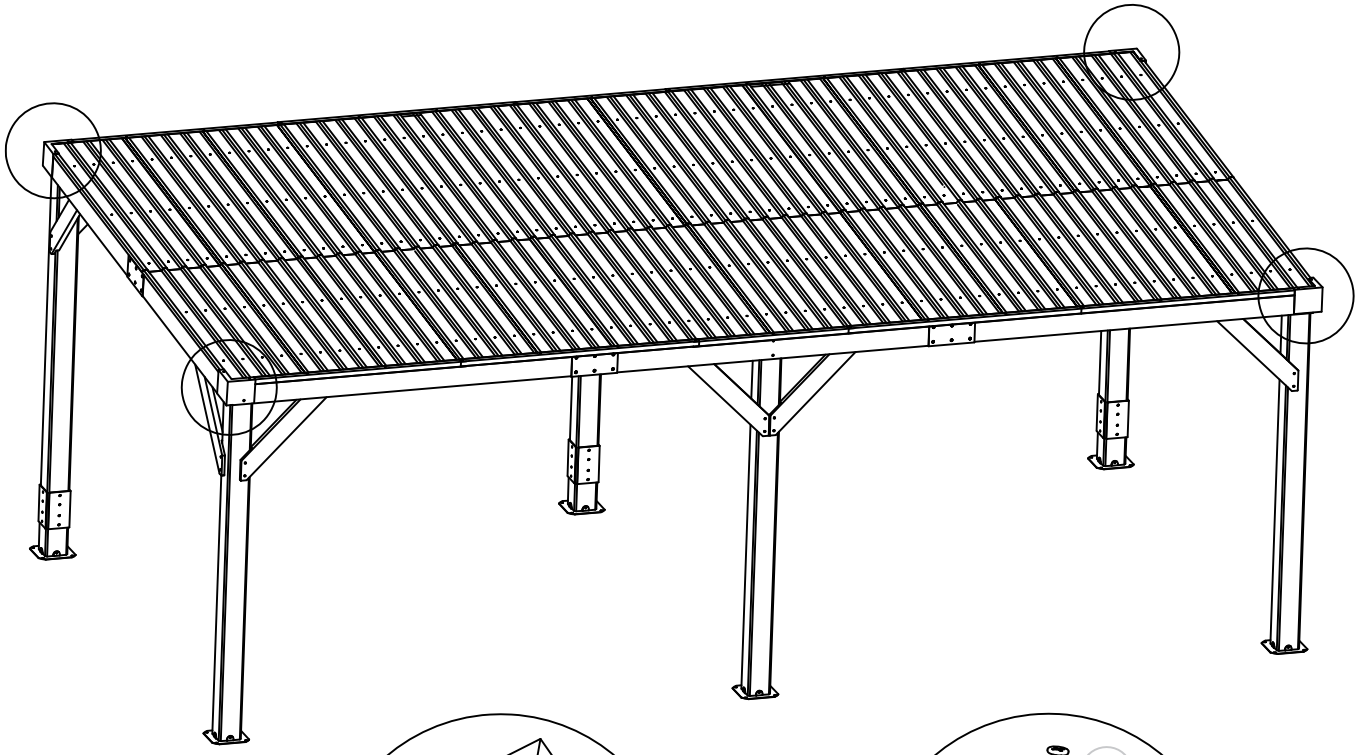

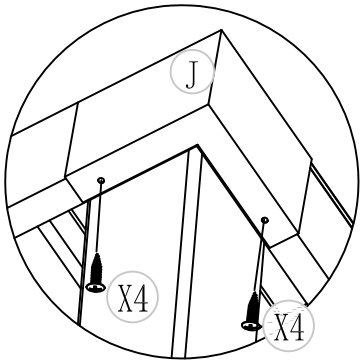

X4

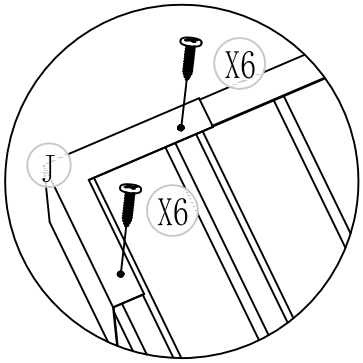

X4

J		4
X4	 4*15	8
X6	 4.2*10	8

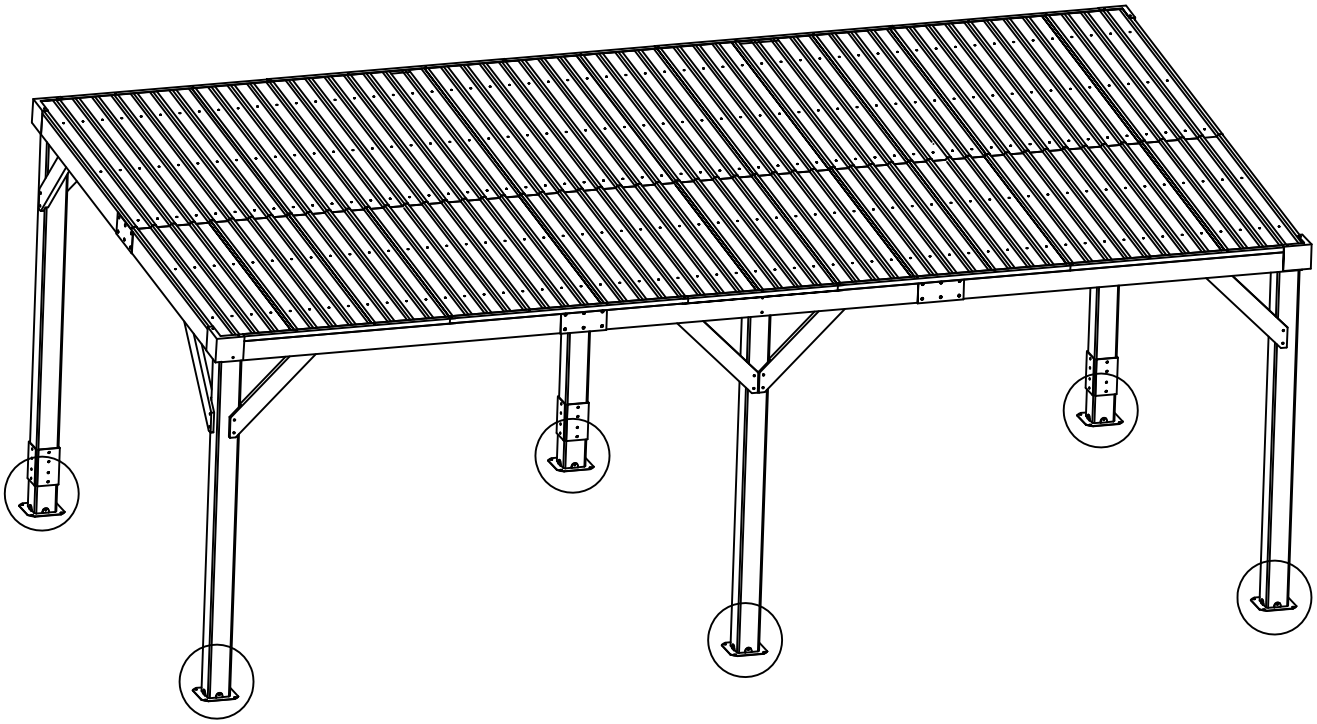

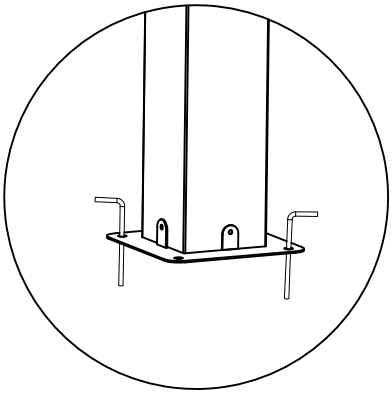

X6

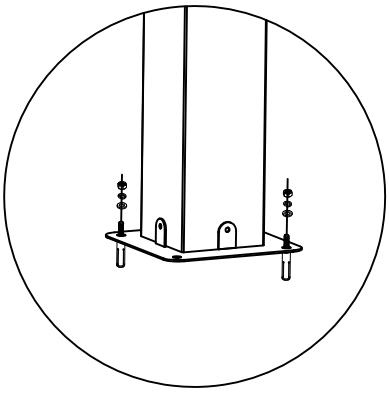

X6

	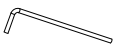	12
		12