Bar Stools
Instruction Manual
1273

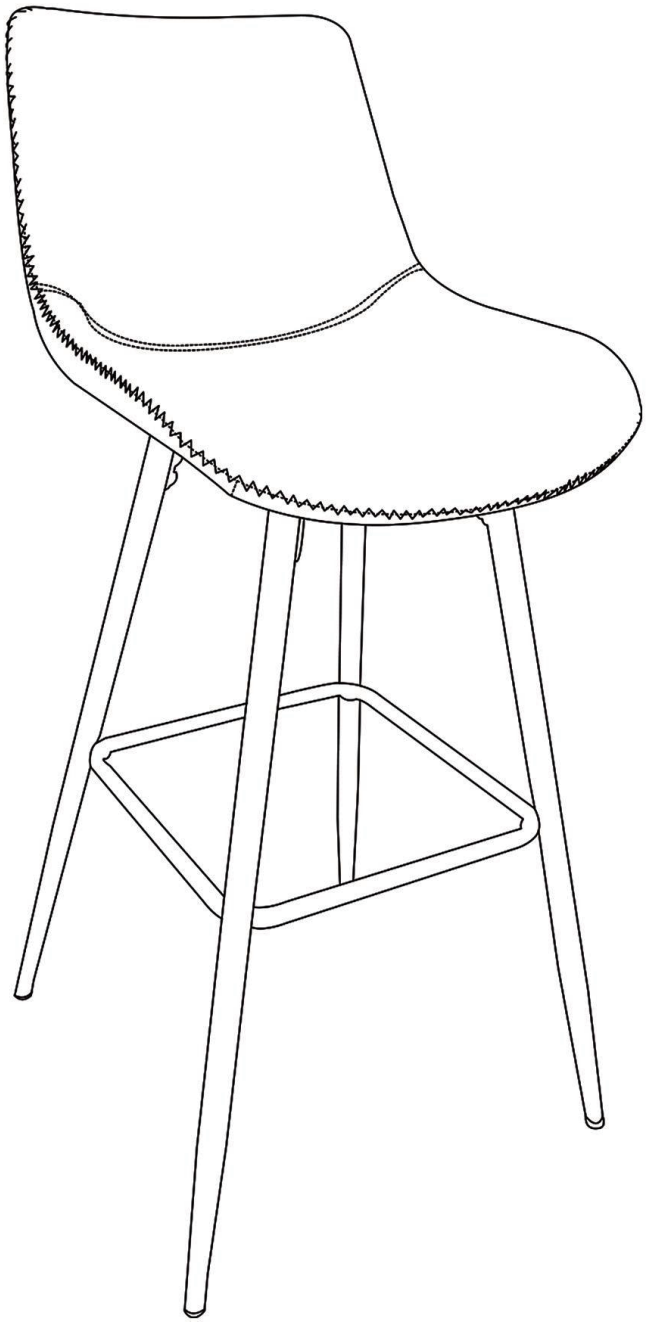

cs@cubewalk.com
+1(573)763-2733

Thank You for Your Purchase! We Hope You Enjoy Your New Furniture.

Please read

1. Do not discard any of the packaging until you are certain that you have all the necessary parts for the assembly.

2. Please ensure that the packaging is disposed of in a safe and environmentally responsible way.

3. During assembly, tighten screws by hand only. Once all screws are in place, you may tighten all screws completely.

Caution

1. Never use this chair as a step ladder.
2. Check that screws have not become loosened every 6 months. Retighten if necessary.
3. Do not allow children to play with or operate the mechanism.
4. Keep hands and feet clear of mechanism.
5. Only the occupant should operate mechanism.

Customer Service e-mail: cs@cubewalk.com

If any part is missing, please contact us by our service email cs@cubewalk.com

Usage Troubleshoot

- Adjust the height of the chair to suit your height. If it is not suitable for you, please contact us for help.

- If the chair is tilted to one side or forward, make sure the screws the seat plate are tightened, make sure the chassis is not upside down, and contact us if the problem cannot be resolved.

- If the fabric of the chair is torn or stained when you receive it, please contact us to get the replacement part or compensation.

- If the chassis is broken, please contact us for a replacement or partial refund, please contact us for help.

- If part is missing, please contact us and provide the picture of the missing part, we will replace it.

Accessories List

If any part is missing, please contact our customer service email: cs@cubewalk.com

Part List

(A) Seat 	(B) Footrest 	(C) Connector Bar 
(D) Connector Bar 	(E) Stool Leg *4pcs 	

Hardware

(F) Bolt M6*25 *13pcs 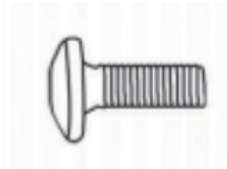	(G) Bolt M6* 45 *4pcs 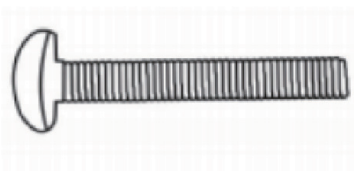	(H) Allen Key M6 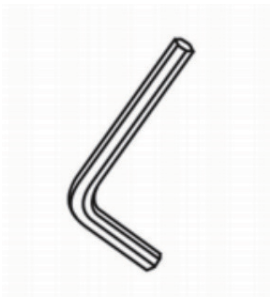

An L-shaped hex wrench can tighten screws more effectively. It is recommended to use it on the last few turns of each screw.

Step 1

Stack (C) Connector Bar and (D) Connector Bar as shown in the diagram, ensuring that D is on top of C. Use (H) Allen Key M6 to tighten 1pc (F) Bolt M6*25 (tighten to 60%).

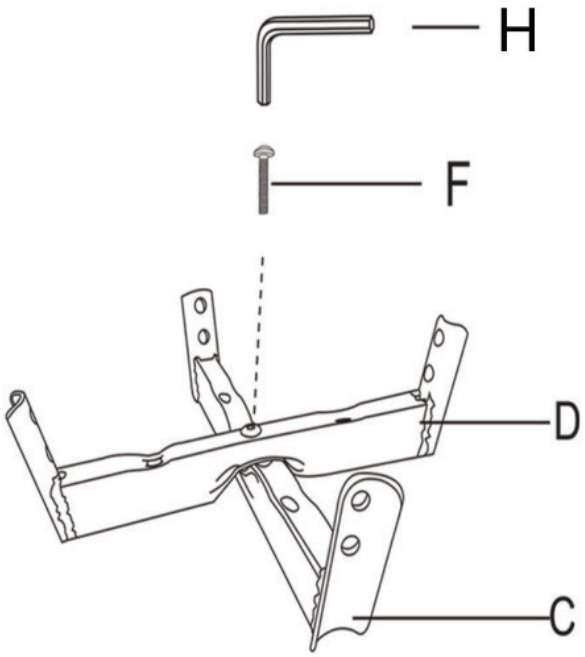

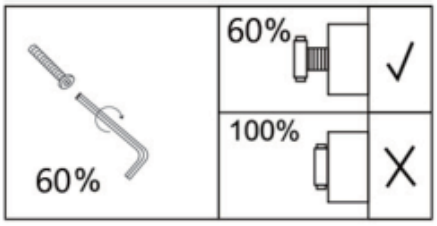

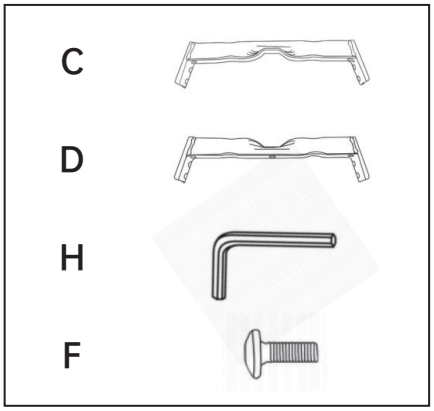

Step 2

Step 2: Align (E) Stool Legs *4pcs with the side holes of Connector Bars. Use (F) Bolt M6*25 *8 pcs to fasten them (tighten to 60%).

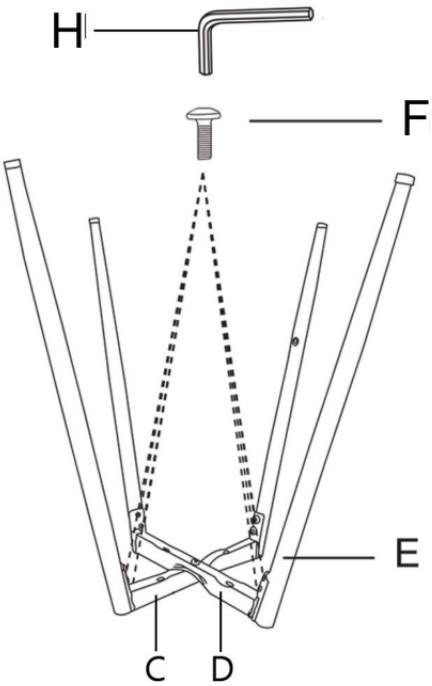

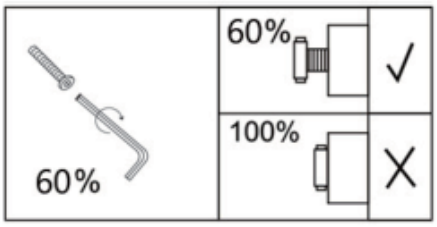

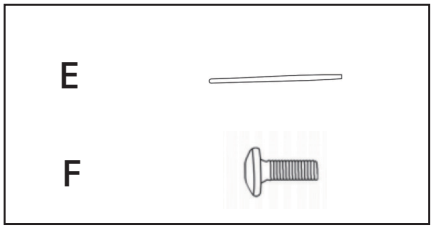

Step 3

Step 3: Align (B) Footrest with the holes on the (E) Stool Legs. Use (F) Bolt M6*25 *4pcs to fasten them (tighten to 60%).

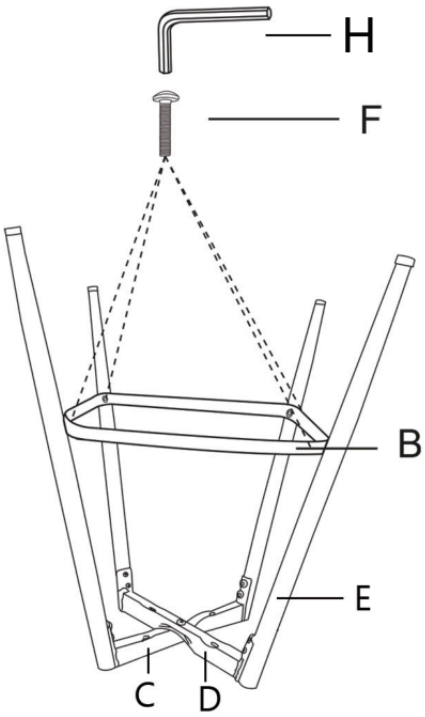

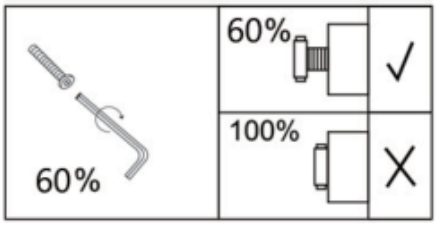

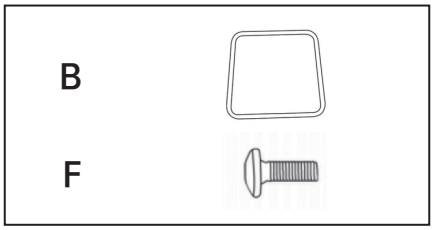

Step 4

Step 4: Align (A) Seat with the center holes of the Connector Bars. Use (G) Bolt M6* 45 *4pcs to fasten it (tighten to 100%). Then fully tighten all previously loosened screws to 100%.

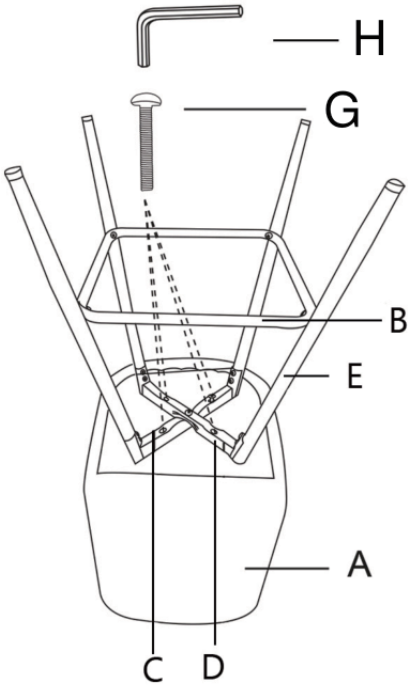

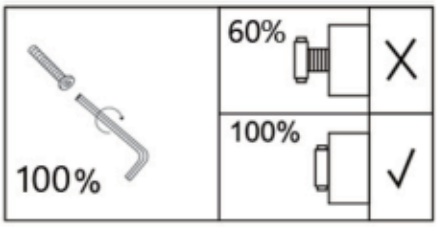

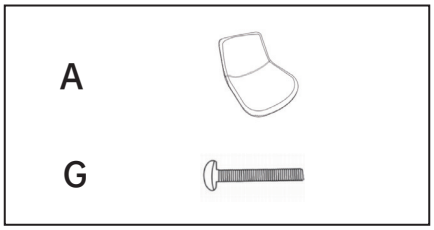

Step 5

Adjust the Leveling Feet
Rotate the adjustable feet at the bottom of the chair legs as needed to level the chair and prevent wobbling on uneven floors.

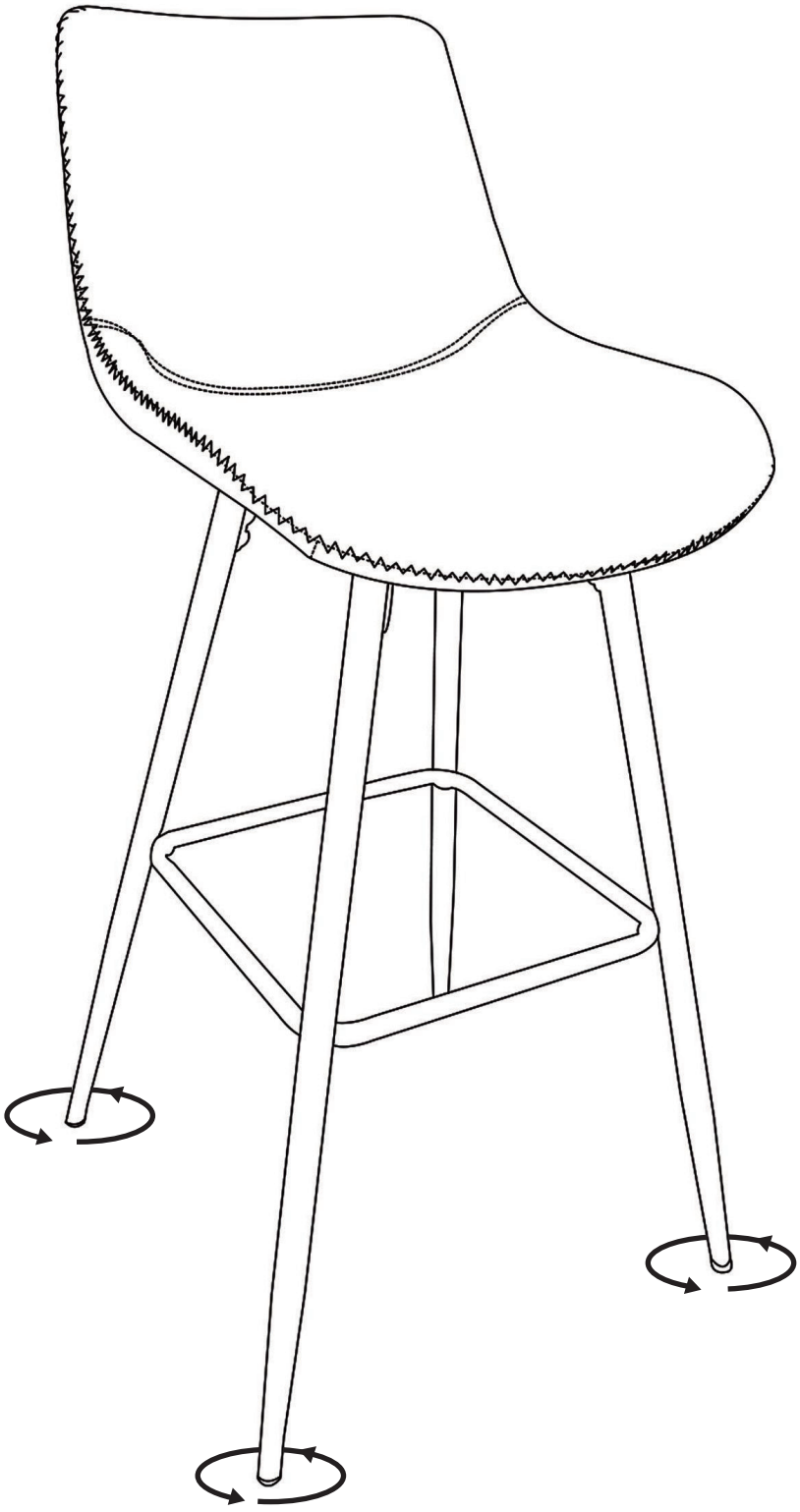

Safety Information



INSTRUCTION MANUAL

Model: 1273

cs@cubewalk.com

+1(573)763-2733