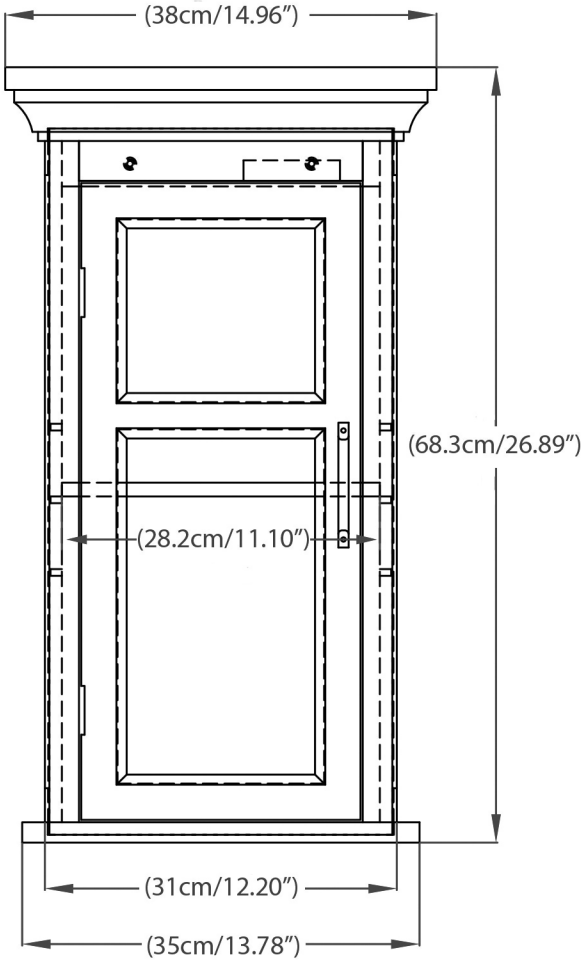

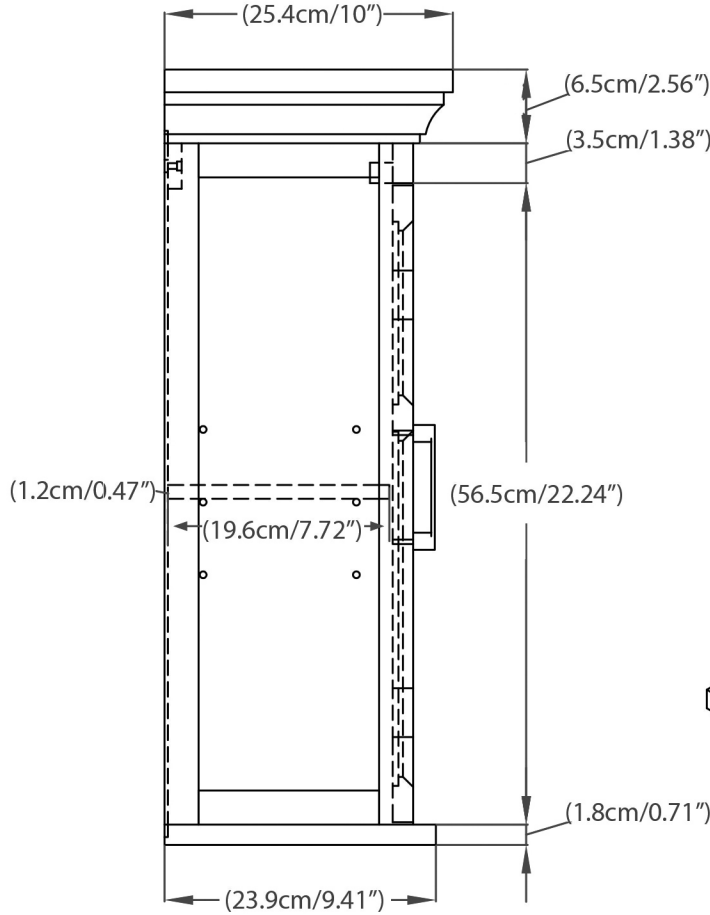

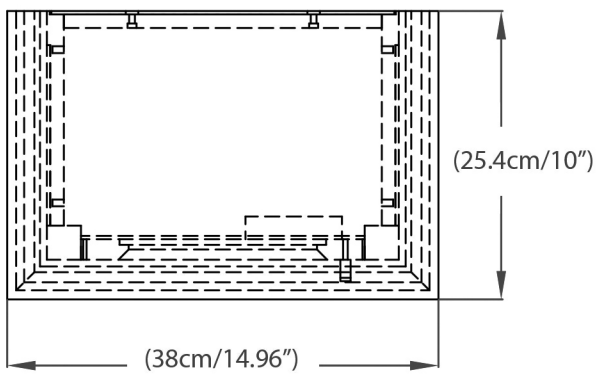
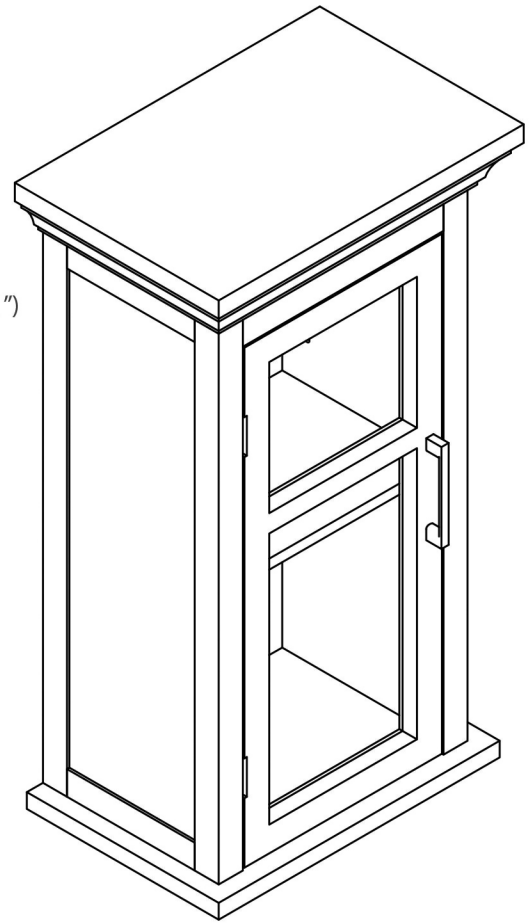
Net Weight: 20.7(lbs)