ASSEMBLY INSTRUCTIONS

SIDEBOARD

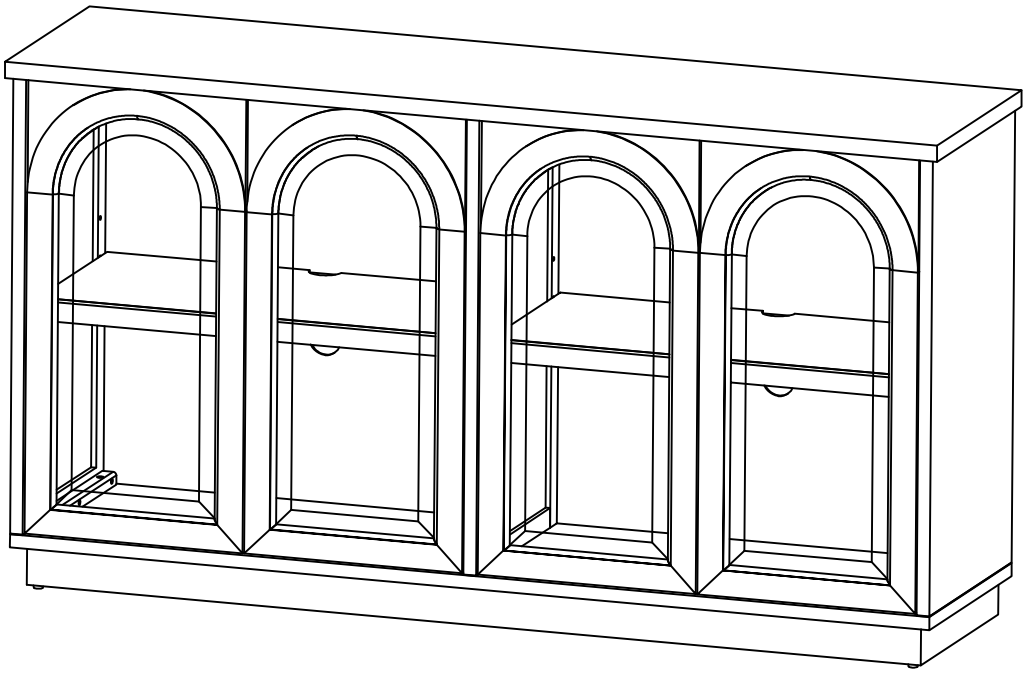

ASSEMBLY INSTRUCTIONS

SIDEBOARD

Please read these instructions fully before starting assembly：
Tools required Phillips screwdriver(medium)
Check you have all the components and tools listed on the following pages.

1. Remove all fittings from the plastic bags and separate them into their groups.
2. Keep children and animals away from the work area, small parts could choke if swallowed.
3. Make sure you have enough space to layout the parts before starting.
4. During assembly do not stand or put weight on the product, this could cause damage.
5. Assemble the item as close to its final position (in the same room) as possible.
6. Assemble on a soft level surface to avoid damaging the unit or your floor.
7. Parts of the assembly will be easier with 2 people.
8. To reduce the likelihood of damaging your product please ensure that your power drill is set on a low torque setting.
9. Assemble all parts and bolts loosely during assembly, only once the product is complete should you fully tighten the bolts
10. Regularly check and ensure That all bolts and fittings are tightend properly.
11. Please do not place items that exceed the load capacity.

Care and maintenance：
Only clean using a damp cloth and mild detergent, do no use bleach or abrasive cleaners.

ASSEMBLY INSTRUCTIONS

SIDEBOARD

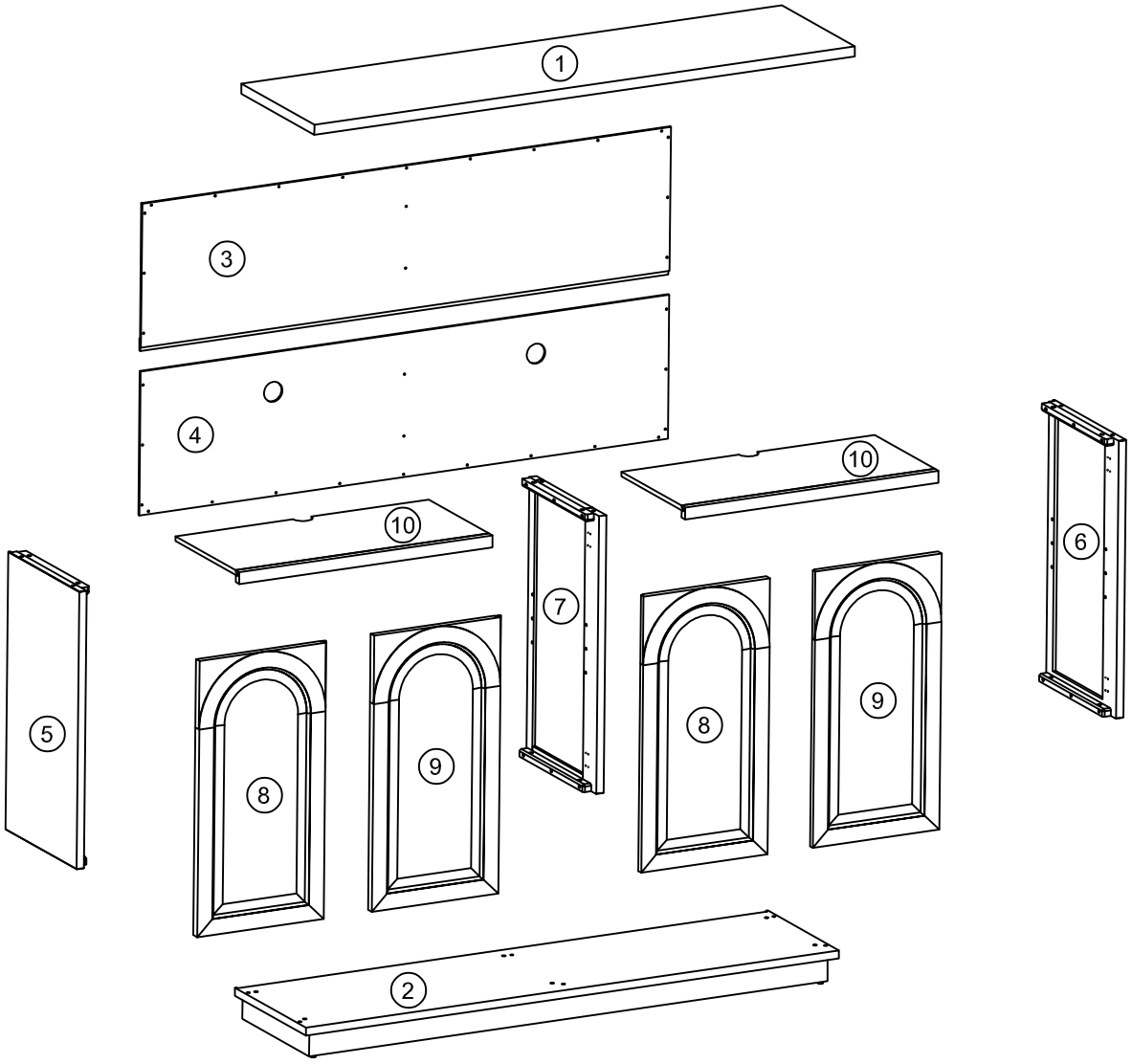

ASSEMBLY INSTRUCTIONS

SIDEBOARD

CARTONS ONLY ONE/ CARTONS SEULEMENT UN

PART LISTS			
NO.	DESCRIPTION	SKETCH	Q'TY
1	TOP FRAME		1 PC
2	BELOW FRAME	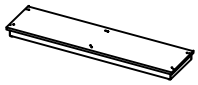	1 PC
3	BACKS PANEL	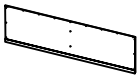	1 PC
4	BACKS PANEL	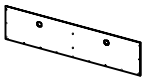	1 PC
5	SIDE FRAMES L		1 PC
6	SIDE FRAMES R		1 PC
7	MIDDLE FRAME		1 PC
8	LEFT DOORS		2 PCS
9	RIGHT DOORS		2 PCS
10	SHELF		2 PCS

HARDWARE LISTS			
NO.	DESCRIPTION	SKETCH	Q'TY
A	BOLT Ø 1/4" x 1 3/8"		12 PCS
B	SPRING WASHER Ø 1/4" x 15/32 "		12 PCS
C	FLAT WASHER Ø 1/4" x 23/32"		12 PCS
D	WOODEN DOWEL Ø 5/16" x 1 3/16"		12 PCS
E	HINGE		8 PCS
F	SHORT SCREW Ø 1/8" x 19/32"		48 PCS
G	DOOR CATCH		4 PCS
H	SHORT SCREW Ø 1/8" x 19/32"		34 PCS
I	SHELF PINS Ø 1 /4"		8 PCS
J	SHORT SCREW Ø 1/8" x 15/32"		8 PCS
K	ALLEN WRENCH 5/32"		1 PC
L	TIPPING RESTRAINT		2 SETS
		not included 	

ASSEMBLY INSTRUCTIONS

SIDEBOARD

STEP - 1

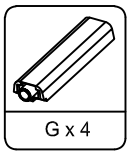

G x 4

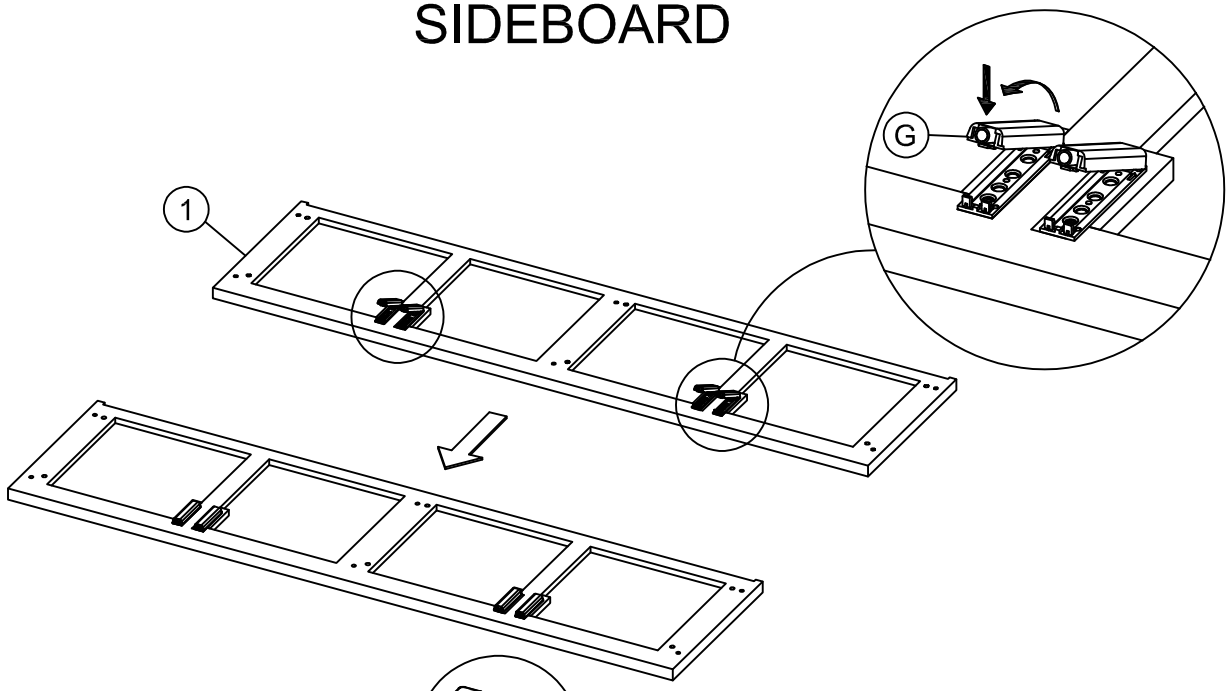

STEP - 2



E x 8



Ø 1/8" x 19/32"

F x 16

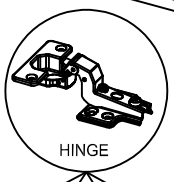

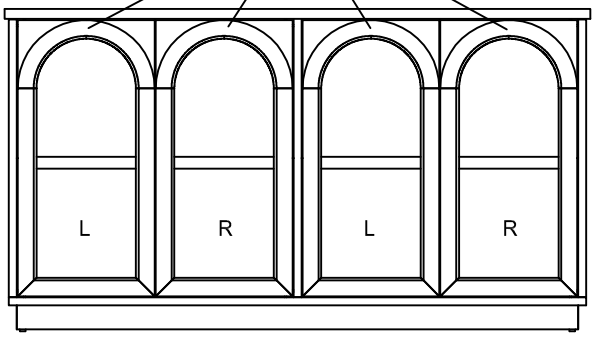

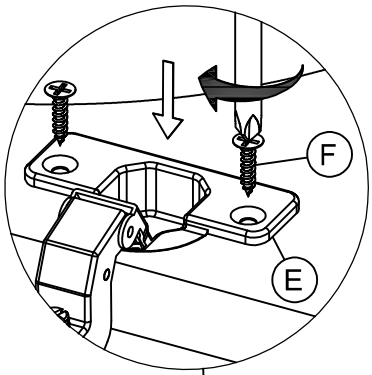

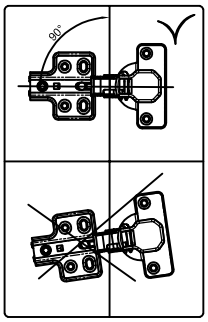

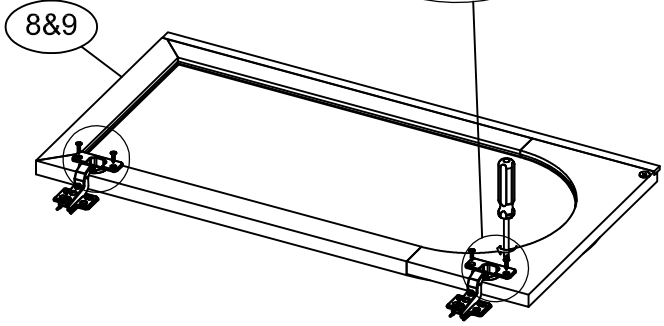

ASSEMBLY INSTRUCTIONS

SIDEBOARD

STEP - 3

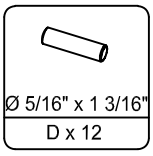

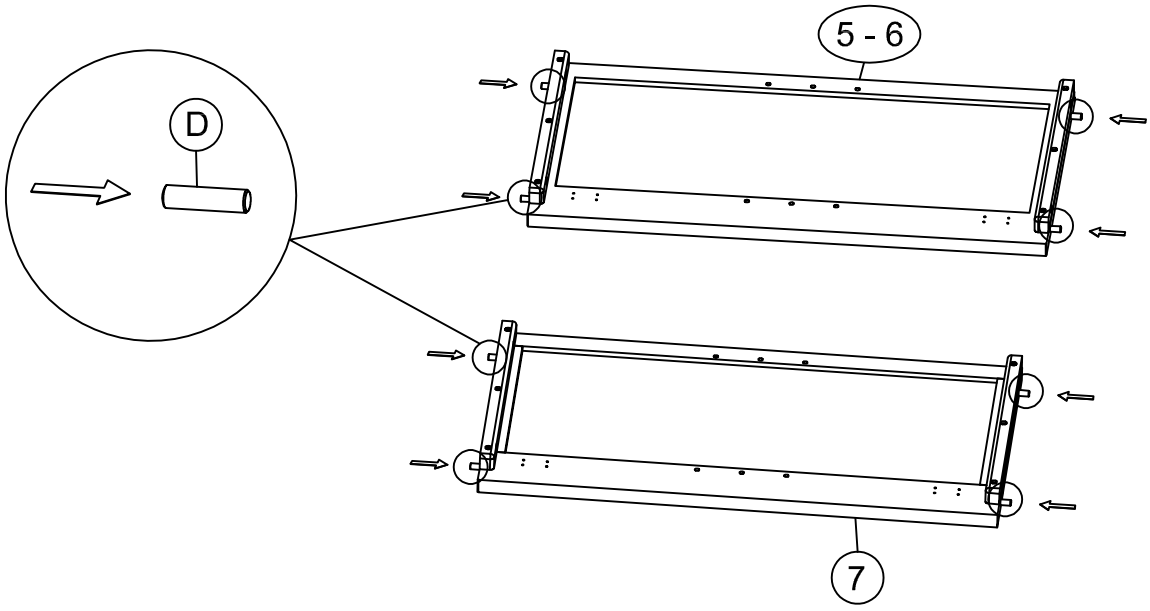

STEP - 4

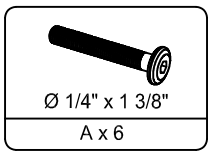

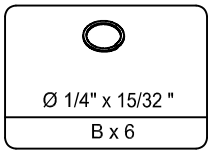

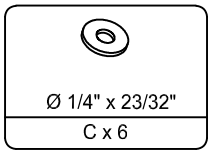

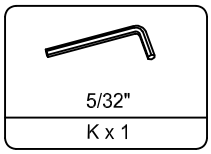

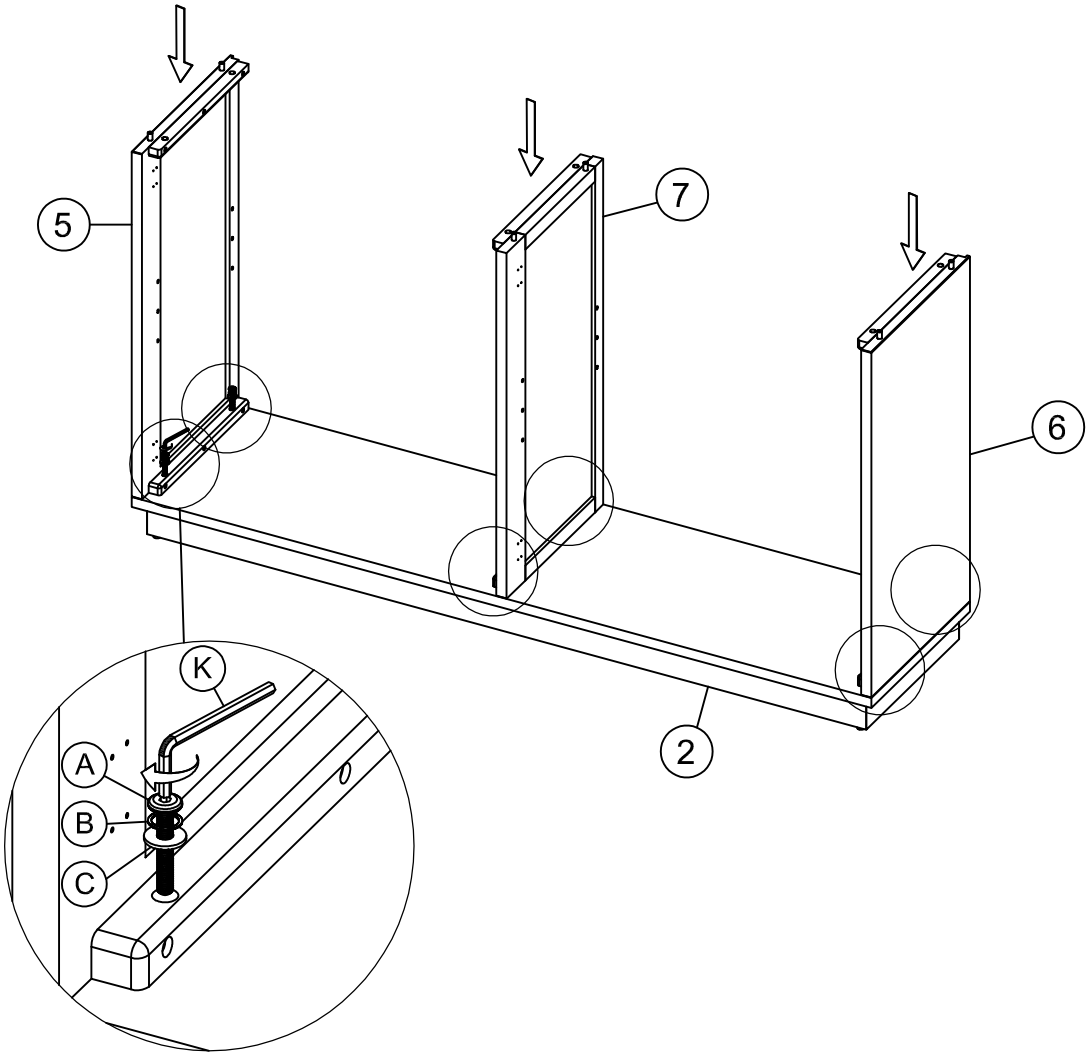

ASSEMBLY INSTRUCTIONS

SIDEBOARD

STEP - 5

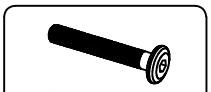

Ø 1/4" x 1 3/8"

A x 6



Ø 1/4" x 15/32 "

B x 6



Ø 1/4" x 23/32"

C x 6



5/32"

K

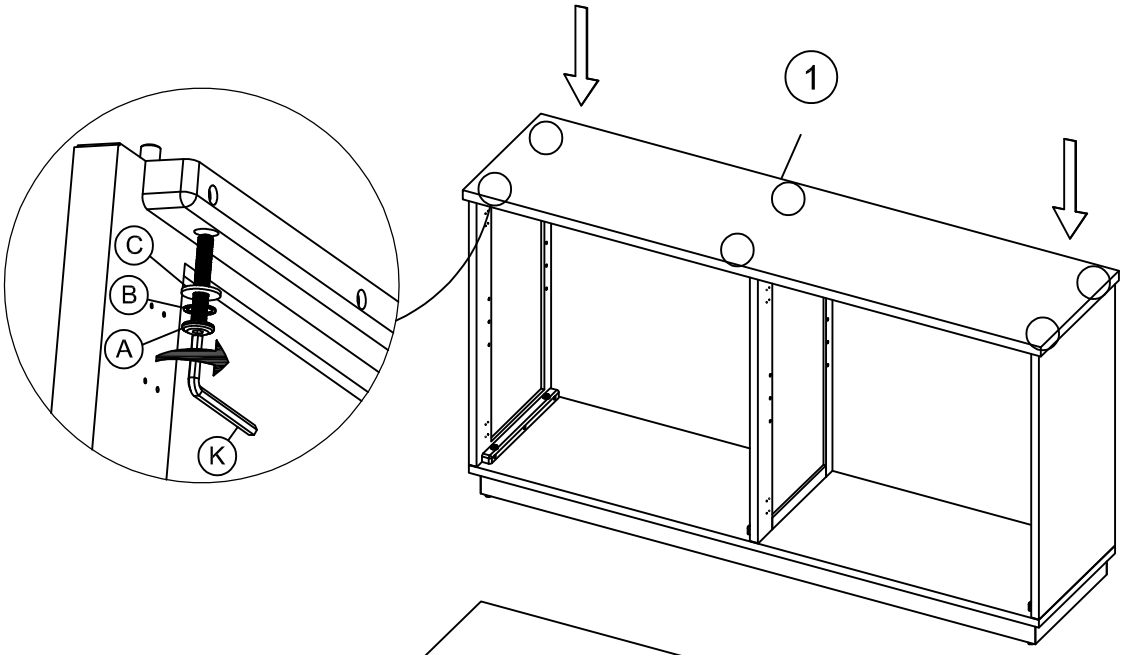

STEP - 6

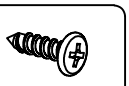

Ø 1/8" x 19/32"

H x 34

ASSEMBLY INSTRUCTIONS

STEP - 7

SIDEBOARD

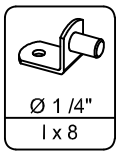

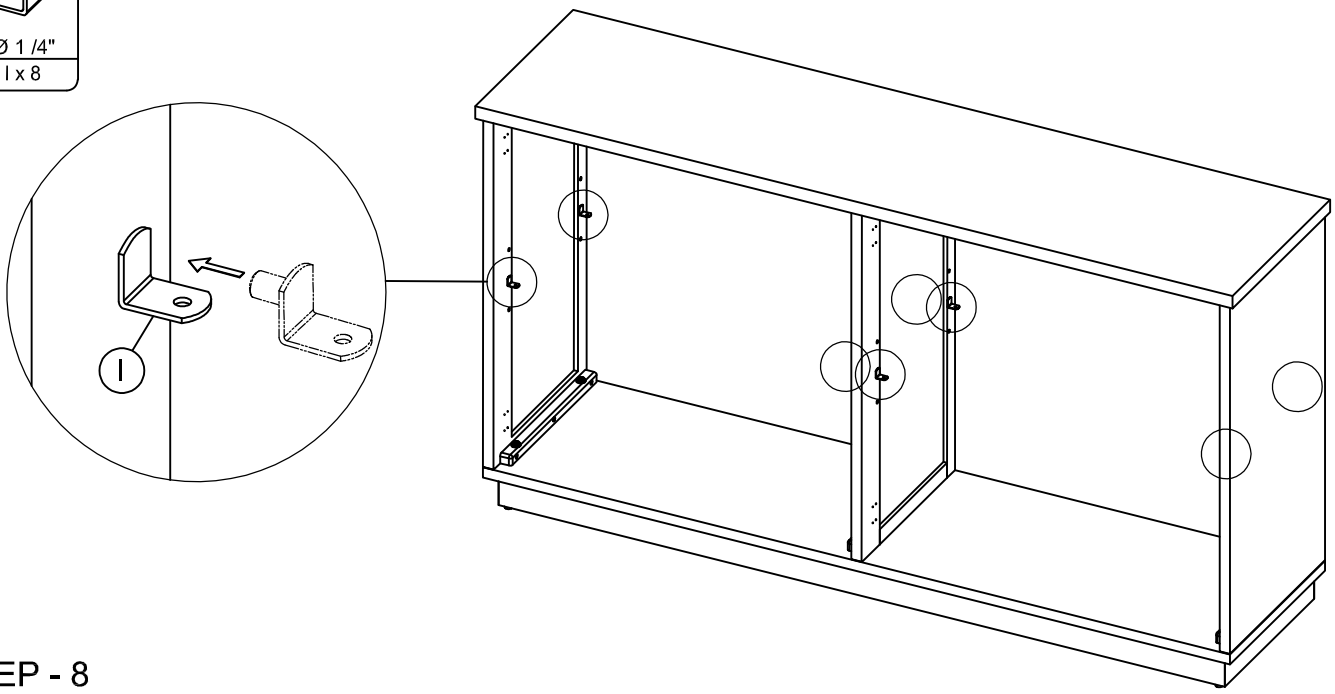

STEP - 8

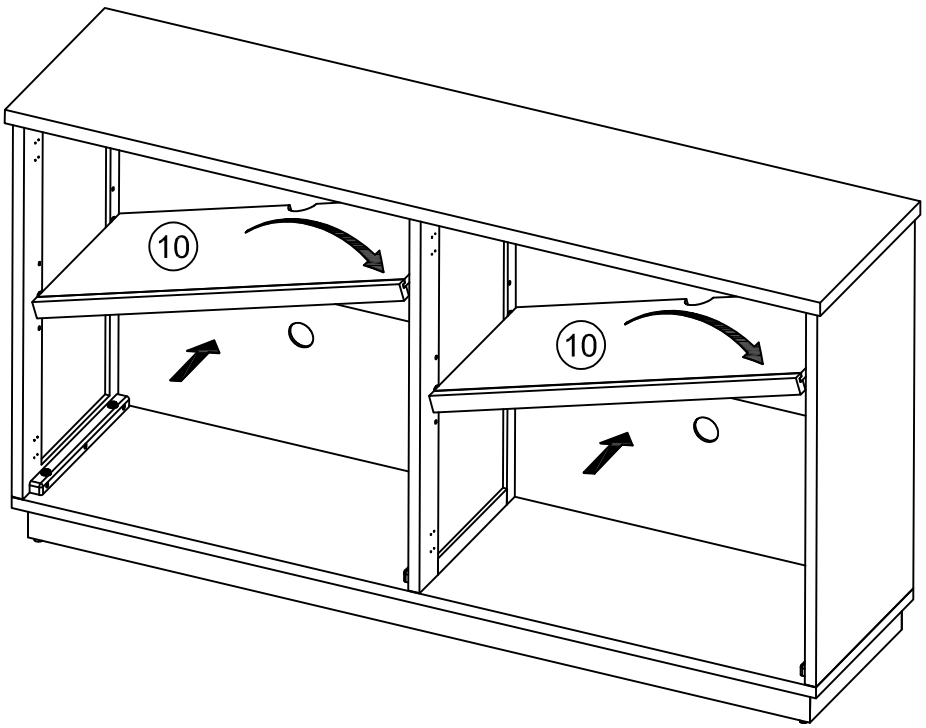

ASSEMBLY INSTRUCTIONS

STEP - 9

SIDEBOARD



STEP - 10

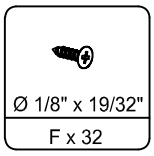

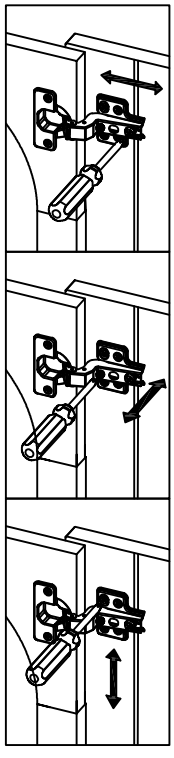

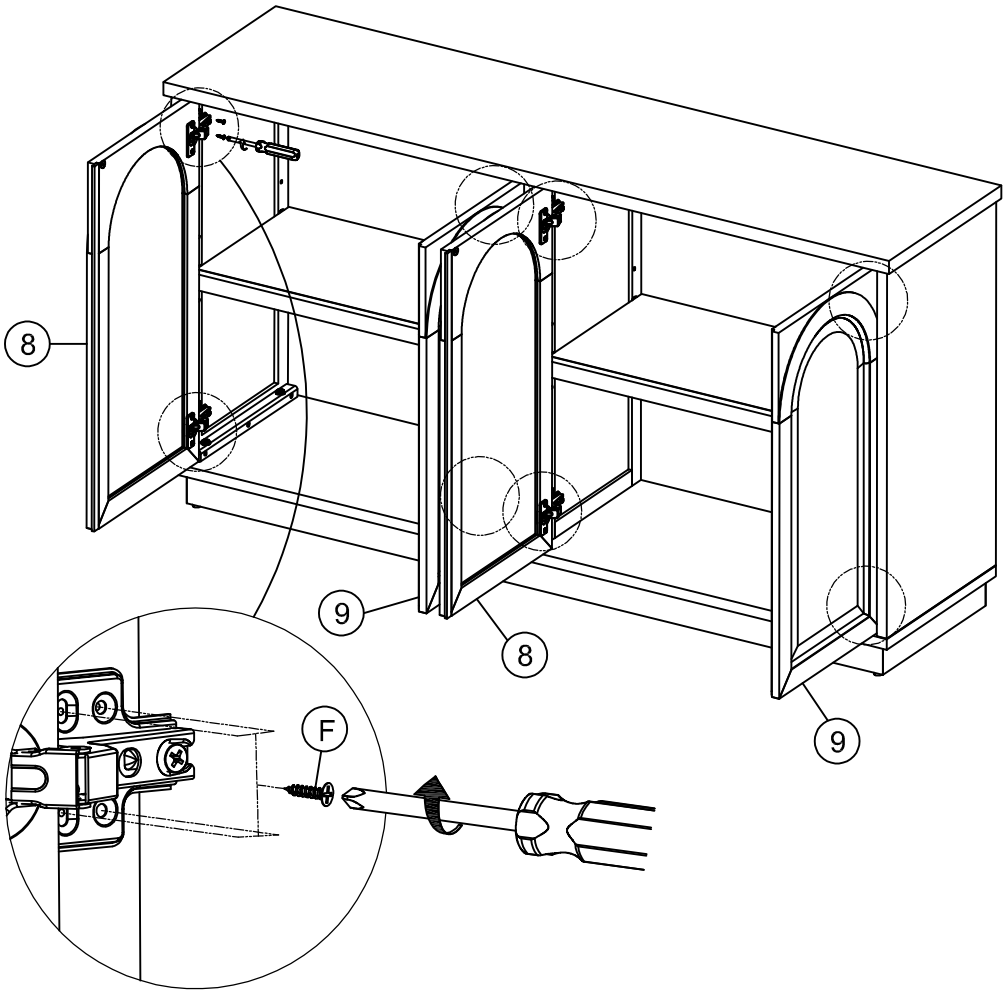

ASSEMBLY INSTRUCTIONS

SIDEBOARD

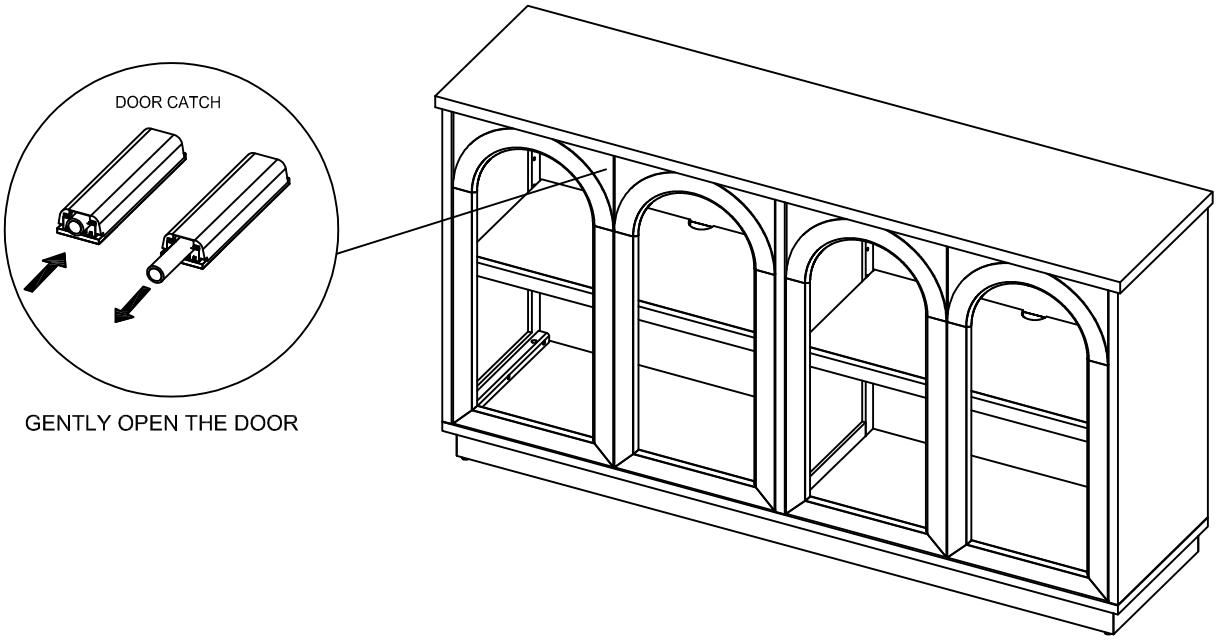

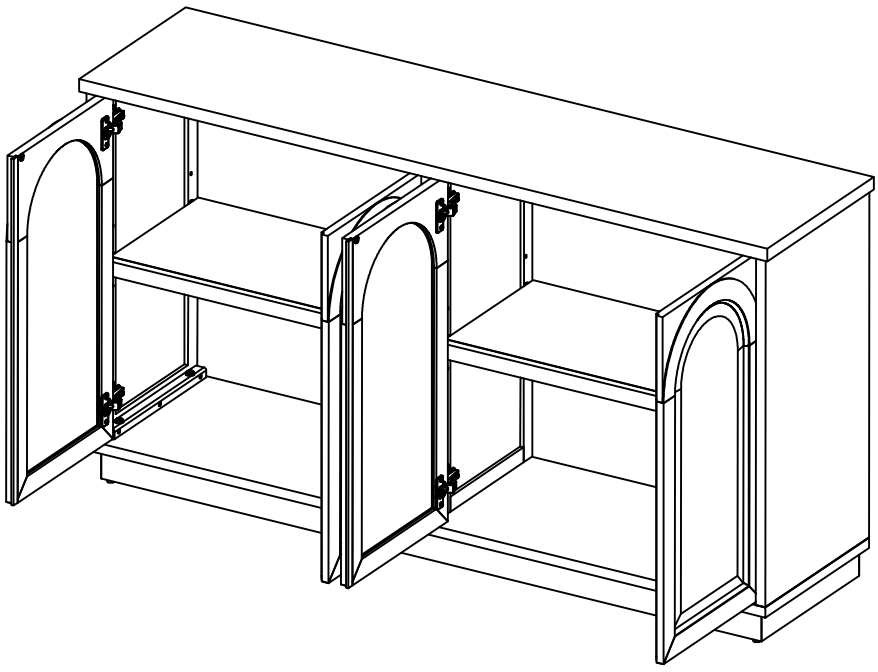

ASSEMBLY INSTRUCTIONS

SIDEBOARD

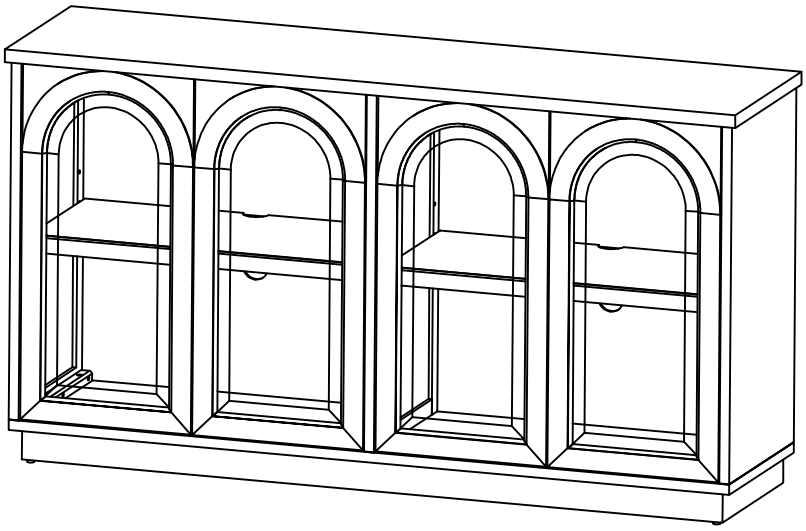

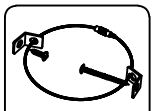

2 SETS

