ASSEMBLY INSTRUCTIONS

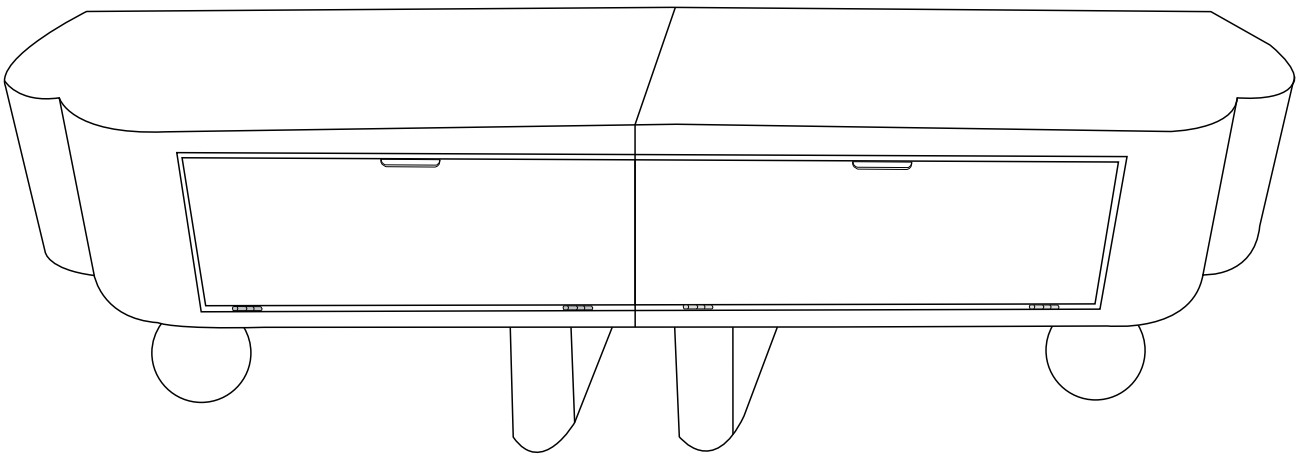

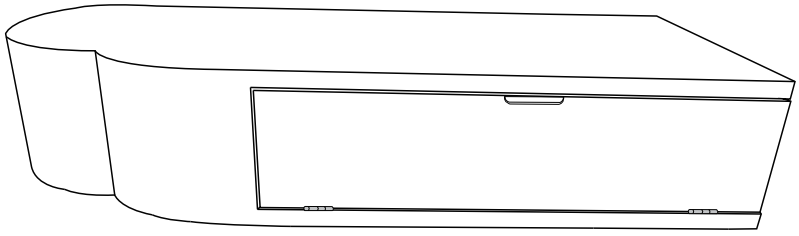

1

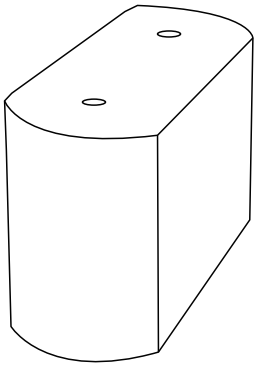

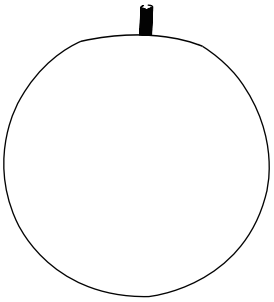

2

3

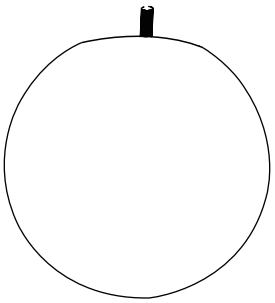

2

A 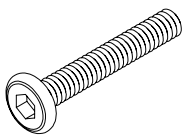 8pcs	B  8pcs	C 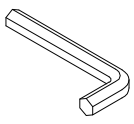 1PC	D  8pcs
E 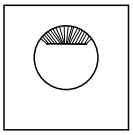 2PCS			

STEP 1

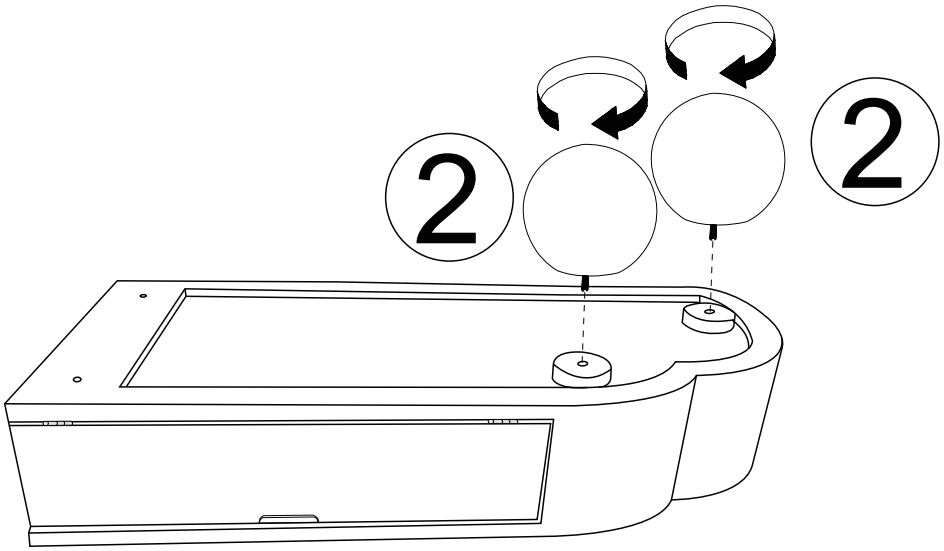

STEP 2

	AX2PCS
	BX2PCS
	CX1PC
	DX4PCS
	EX1PC

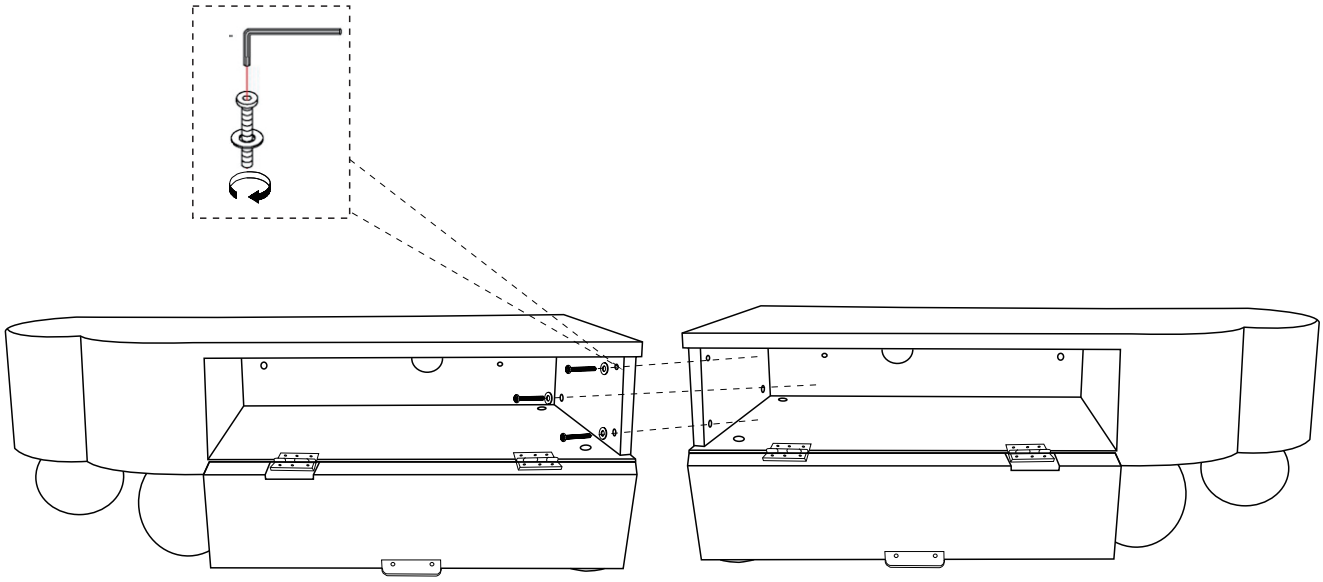

	AX4PCS
	BX4PCS
	CX1PC

	EX2PCS

