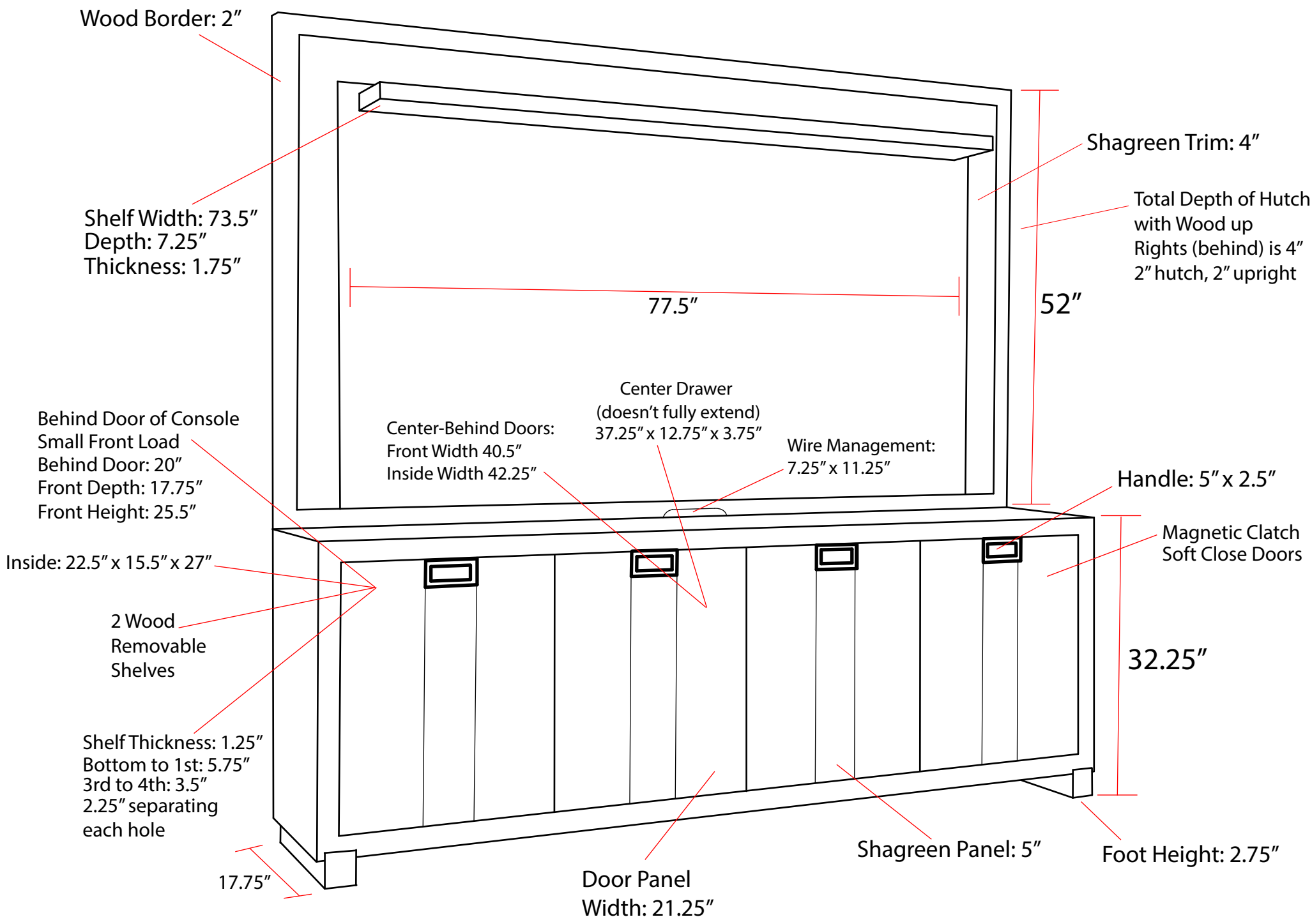Ascent 90 In. TV Console with Hutch and Back Panel
Overall: 90″ x 19.75″ x 84.25″