PACKING LIST

No. \ Size		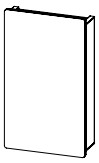		
		14"x24"	20"x28"	24"x30"
(1)	 Short Screw M4x6	3 Pcs	3 Pcs	3 Pcs
(2)	 Door Bumper	3 Pcs	3 Pcs	3 Pcs
(3)	 Long Screw Ø5*55	6 Pcs	6 Pcs	6 Pcs
(4)	 Anchor Ø8*50	6 Pcs	6 Pcs	6 Pcs
(5)	 Hinge Cover	2 Pcs	2 Pcs	2 Pcs
(6)	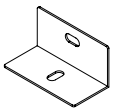 Bottom Bracket	2 Pcs	2 Pcs	2 Pcs
(7)	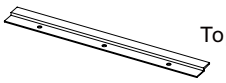 Top Bracket	1 Pcs	1 Pcs	1 Pcs

● Carefully review all parts and read the installation instructions before you start. if parts are missing, please contact us.

SPECIFICATIONS

Dimension (Inch)	Dimension (Millimeter)	Types of Medicine Cabinet
14 x 24 x 4 7/8	356 x 610 x 124	Single-door
20 x 28 x 4 7/8	508 x 711 x 124	Single-door
24 x 30 x 4 7/8	610 x 762 x 124	Single-door

INSTALLATION INSTRUCTIONS

- Please read all instructions carefully and keep them for future reference.
- Do not discard any packaging materials or instructions until installation is complete and everything has been verified.

IMPORTANT

To prevent damage, do not place the cabinet directly on tile or concrete surfaces prior to installation. Use a protective layer to avoid chipping the corners.

Be sure to check for any hidden wiring or pipes before drilling guide holes to avoid potential damage.

MAINTENANCE

Wipe clean with a soft damp cloth. Apply glass cleaner to cloth and do not apply directly to mirror.

Please avoid harsh, corrosive and abrasive cleaners.

Keep dry and avoid damp environments.

INSTALLATION

Please refer to below surface mount or recessed mount method.

INSTALLATION

Installation Tools (Tools Not Included)

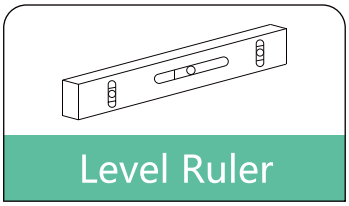
Level Ruler

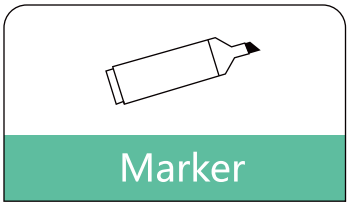
Marker

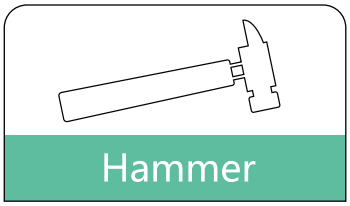
Hammer

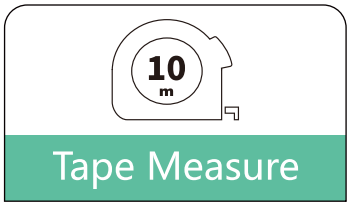

Tape Measure

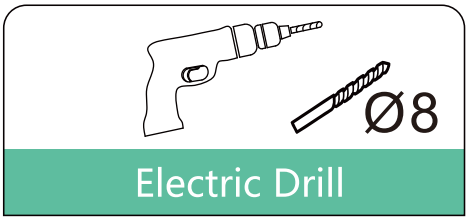

Electric Drill

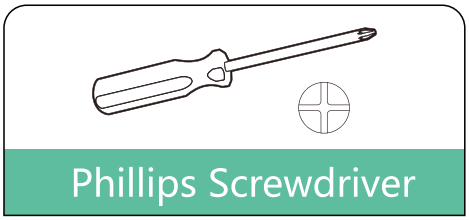
Phillips Screwdriver


Safety Goggles

SURFACE MOUNT

Step 1

Refer to hole spacing diagram as below or mark hole position by top bracket(7). then drill holes in the wall by an electric drill.

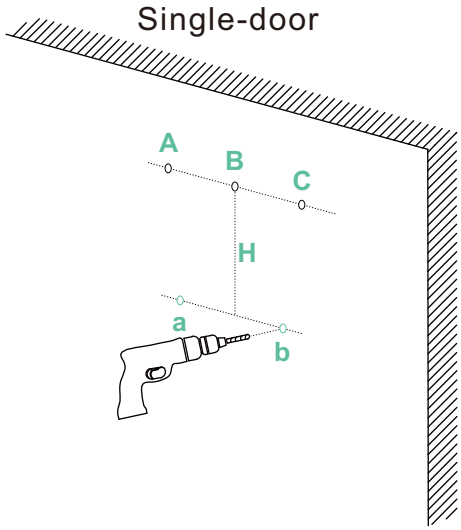

Required Tools

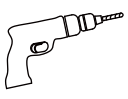
Electirc drill

Distance \ Product size			
	14"x24"	20"x28"	24"x30"
A→B	4"	8"	8"
B→C	4"	8"	8"
C→D			
D→E			
E→F			
F→G			
Interval H	23 3/16"	27 3/16"	29 3/16"
a→b	8"	16"	16"

SURFACE MOUNT

Step 2

Place anchor(4) into the drilled holes and fix the top bracket(7) by long screw (3).

(3)		Long Screw Ø5x55
(4)		Anchor Ø8x50
(7)	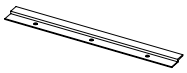	Top Bracket

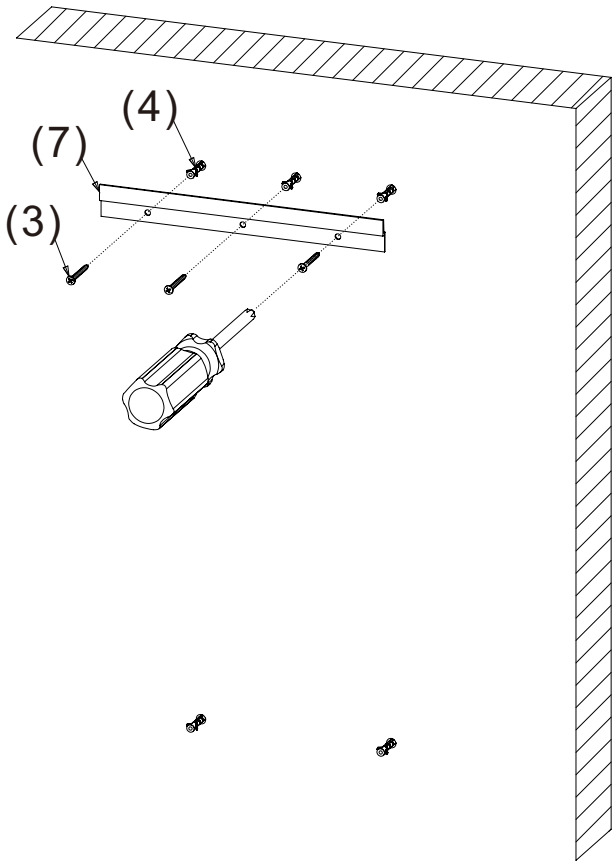

Step 3

①Lift the cabinet above the top bracket(7). Press it firmly against the wall, then lower it into place on the bracket.

②Secure the bottom bracket(6) to the cabinet using the short screw(1), Do not overtighten.

③Install the bottom bracket(6) onto the wall with the long screw(3) , then fully tighten the short screw(1) to secure the cabinet in place.

(1)		Short Screw M4x6
(3)		Long Screw Ø5x55
(6)		Bottom Bracket

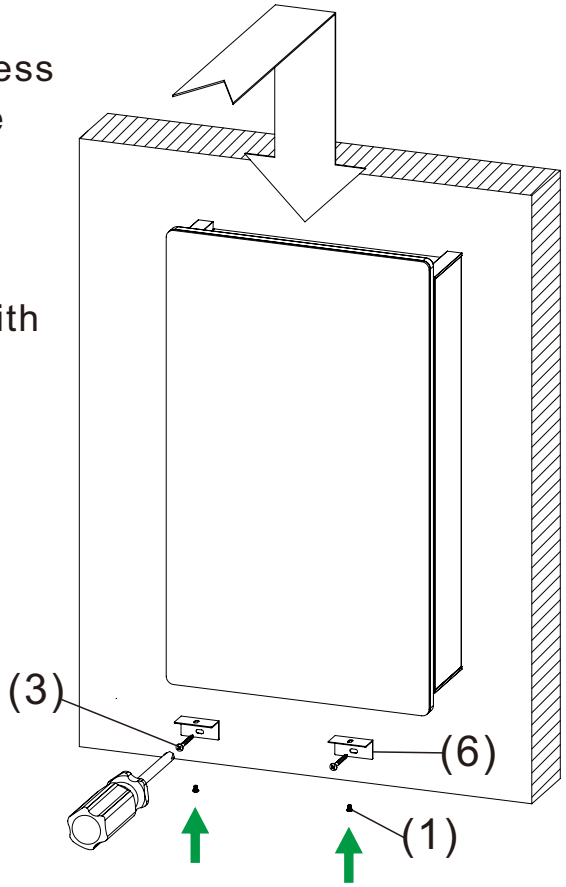

SURFACE MOUNT

Step 4

Snap hinge cover(5) onto each hinge, ensuring they are fully secured.
Stick the door bumper(2) onto the inside of the cabinet door(s).

(5)		Hinge Cover
(2)		Door Bumper

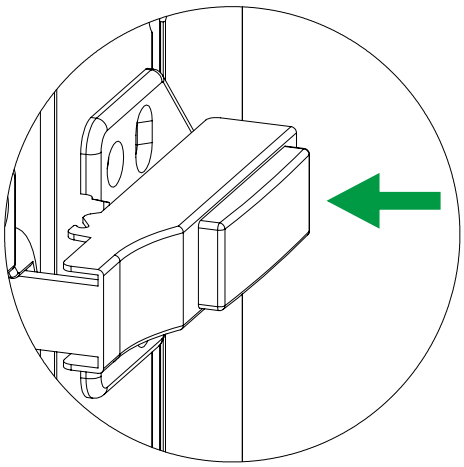

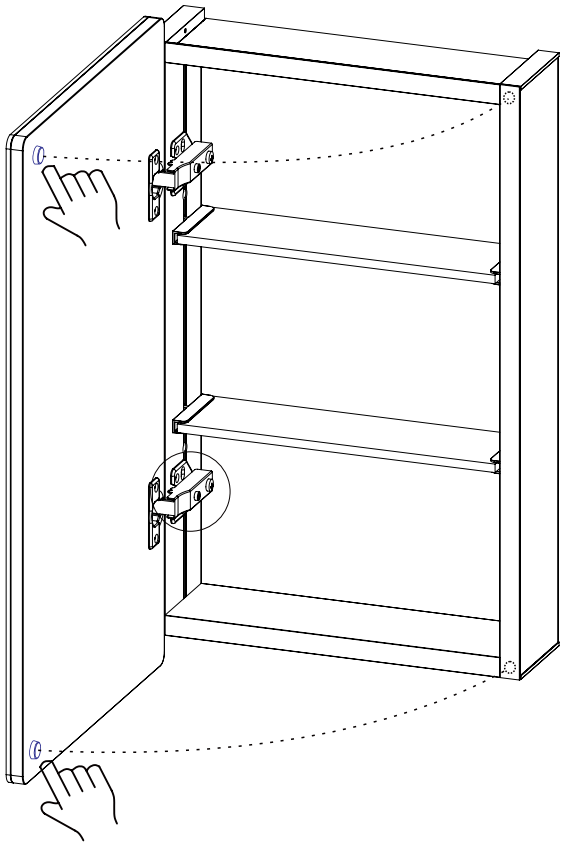

Step 5

The cabinet is now ready for regular use.

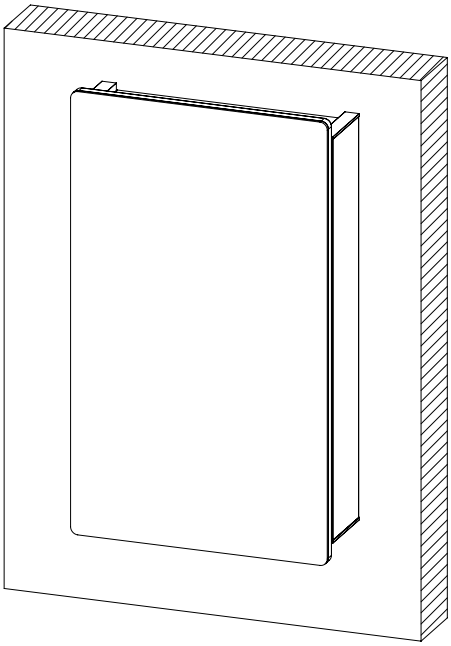

RECESSED MOUNT

Step 1

For recessed mount installation, cut openings according to dimensional data in the diagram below.

Dimension / Size	W	H	D
14" x 24"	13 3/8"	23 3/8"	4 1/8"
20" x 28"	19 3/8"	27 3/8"	4 1/8"
24" x 30"	23 3/8"	29 3/8"	4 1/8"

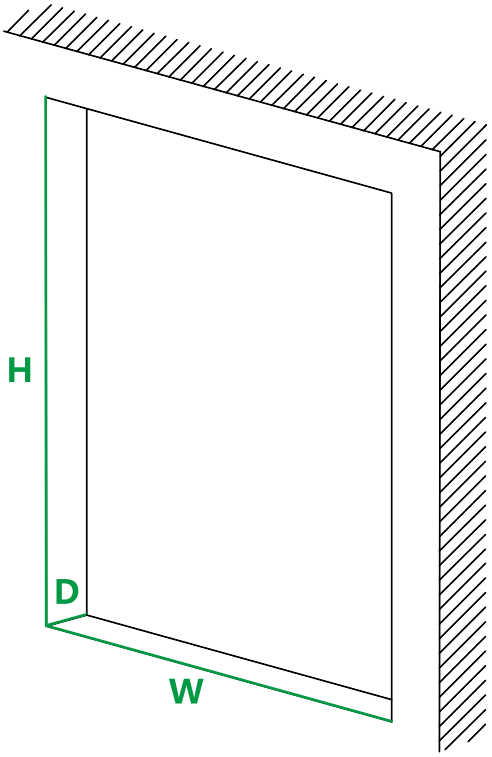

Step 2

Loosen screws on both sides and remove the side panel.

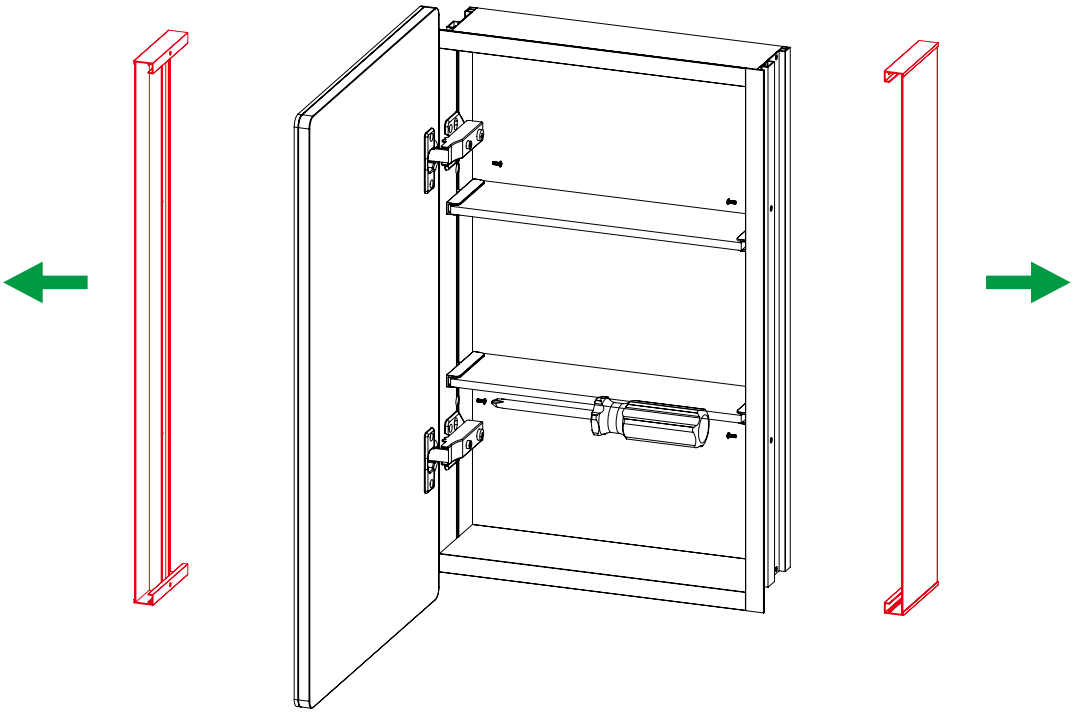

RECESSED MOUNT

Step 3

Carefully place the cabinet into the prepared wall opening. Secure it using the long screws(3) through the side brackets.

(3)		Long Screw Ø5x55

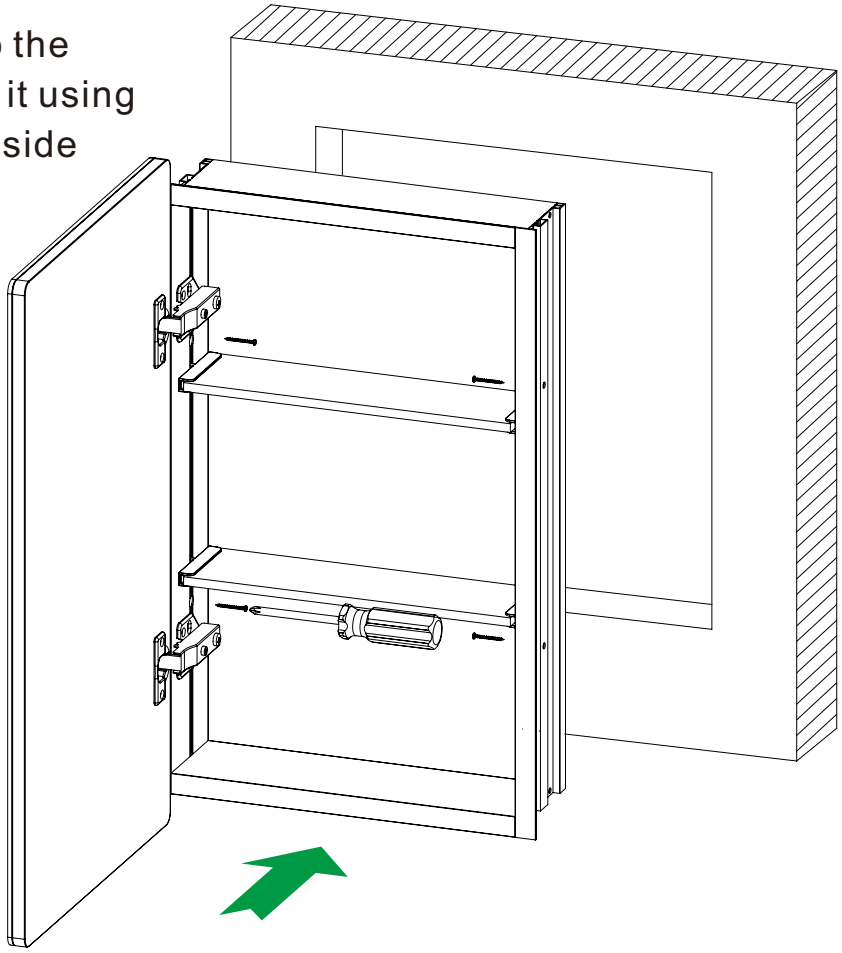

Step 4

Snap hinge cover(5) onto each hinge, ensuring they are fully secured.
Stick the door bumper(2) onto the inside of the cabinet door(s).

(5)		Hinge Cover
(2)		Door Bumper

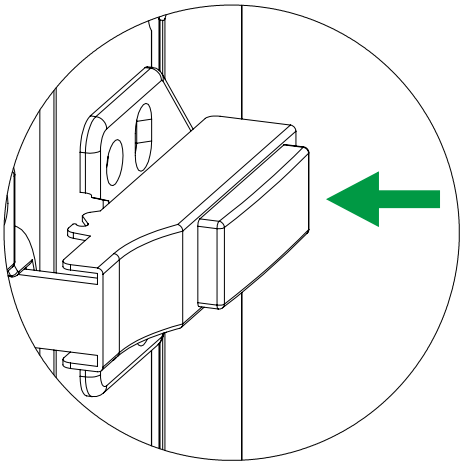

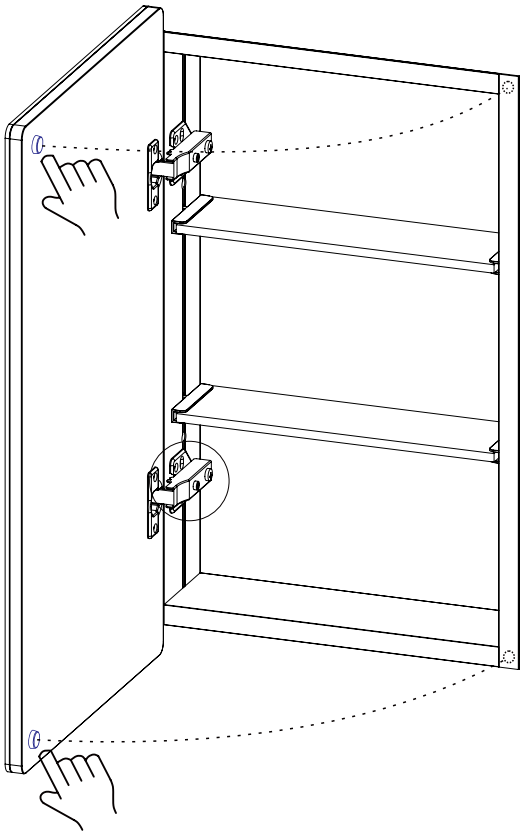

RECESSED MOUNT

Step 5

The cabinet is now ready for regular use.

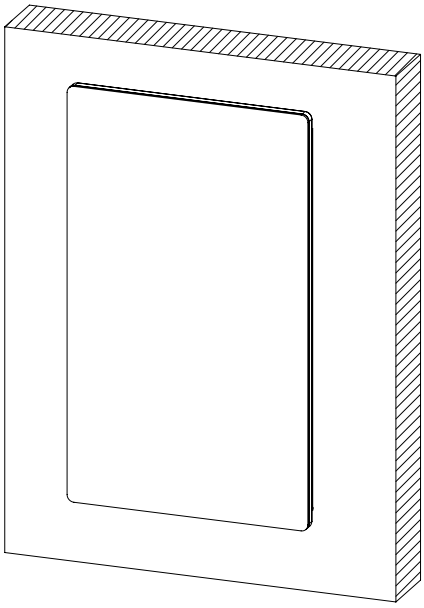

HOW TO ADJUST THE HEIGHT OF TEMPERED GLASS SHELF

Loosen the screw on each clamp, slide them along the groove to adjust the shelf to your desired height. Ensure that both clamps are aligned at the same level before retightening.

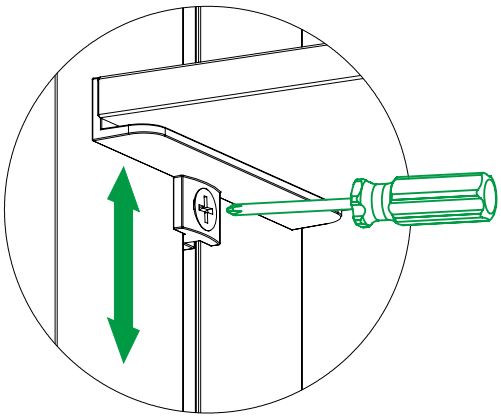

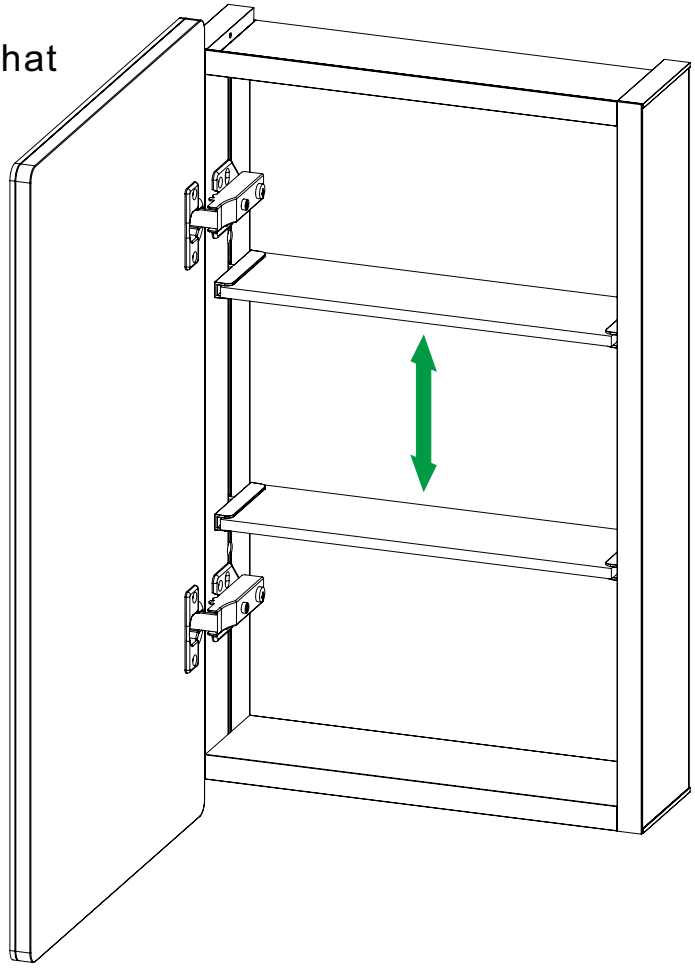

HOW TO ADJUST HYDRAULIC HINGES

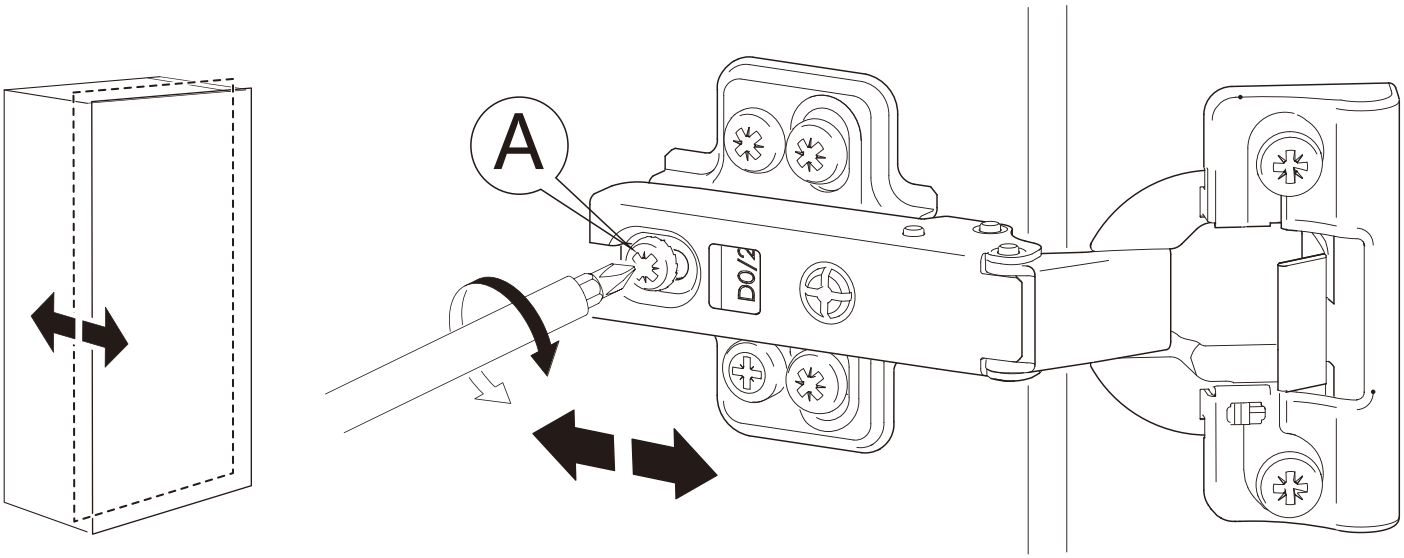

A:Adjusts the door depth

Rotate screw A clockwise or counterclockwise to adjust the door depth and modify the gap between the door and the cabinet frame.

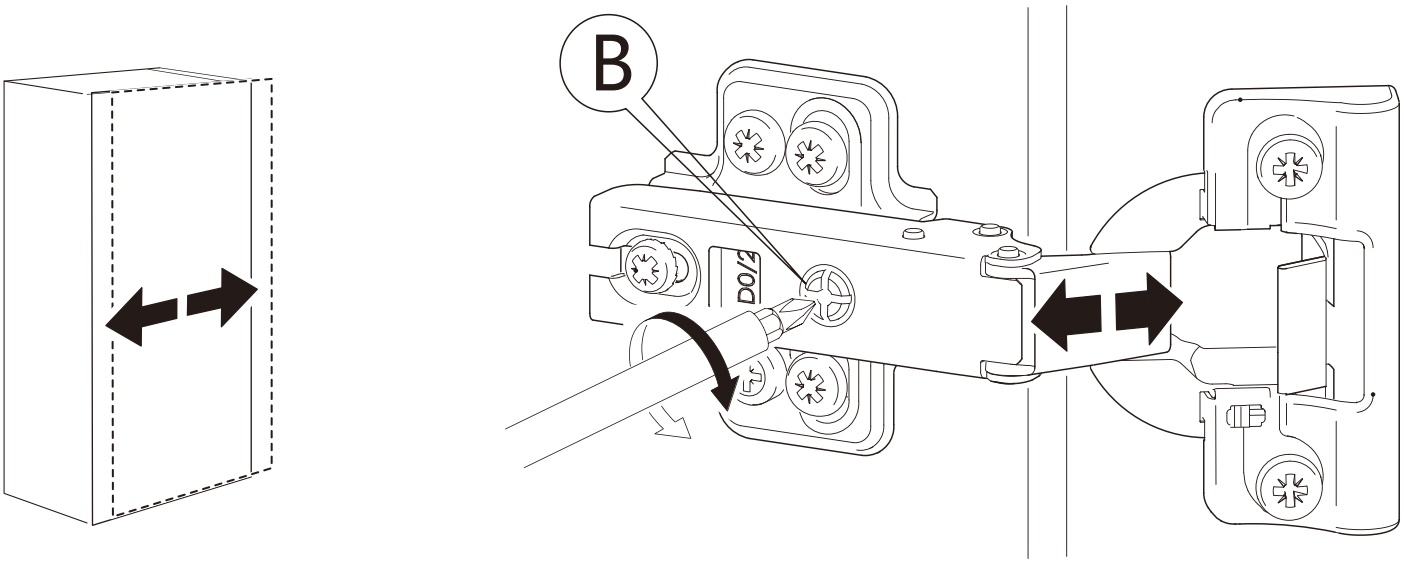

B:Adjusts the door side-to-side alignment

Rotate screw B clockwise or counterclockwise to move the door left or right for proper side-to-side alignment.

AFTER-SALES SERVICE CARD

Thank you sincerely for choosing our product — we truly appreciate your trust. We hope it brings both beauty and functionality to your home. Each item is carefully inspected and thoughtfully packaged to ensure the highest quality. If you experience any issues with shipping or the product itself, please don't hesitate to reach out. We're always here and happy to assist you in any way we can.

Warranty Information

The HBEZON medicine cabinet is covered by a 1-year limited warranty from the date of purchase,protecting against manufacturing defects and hardware malfunctions under normal residential use.

For assistance or service, please contact us at:

cs@hbezon.com

We are here to assist and typically respond within 24 hours.