OWNER'S MANUAL

10'X13' Patio Arched Pergola

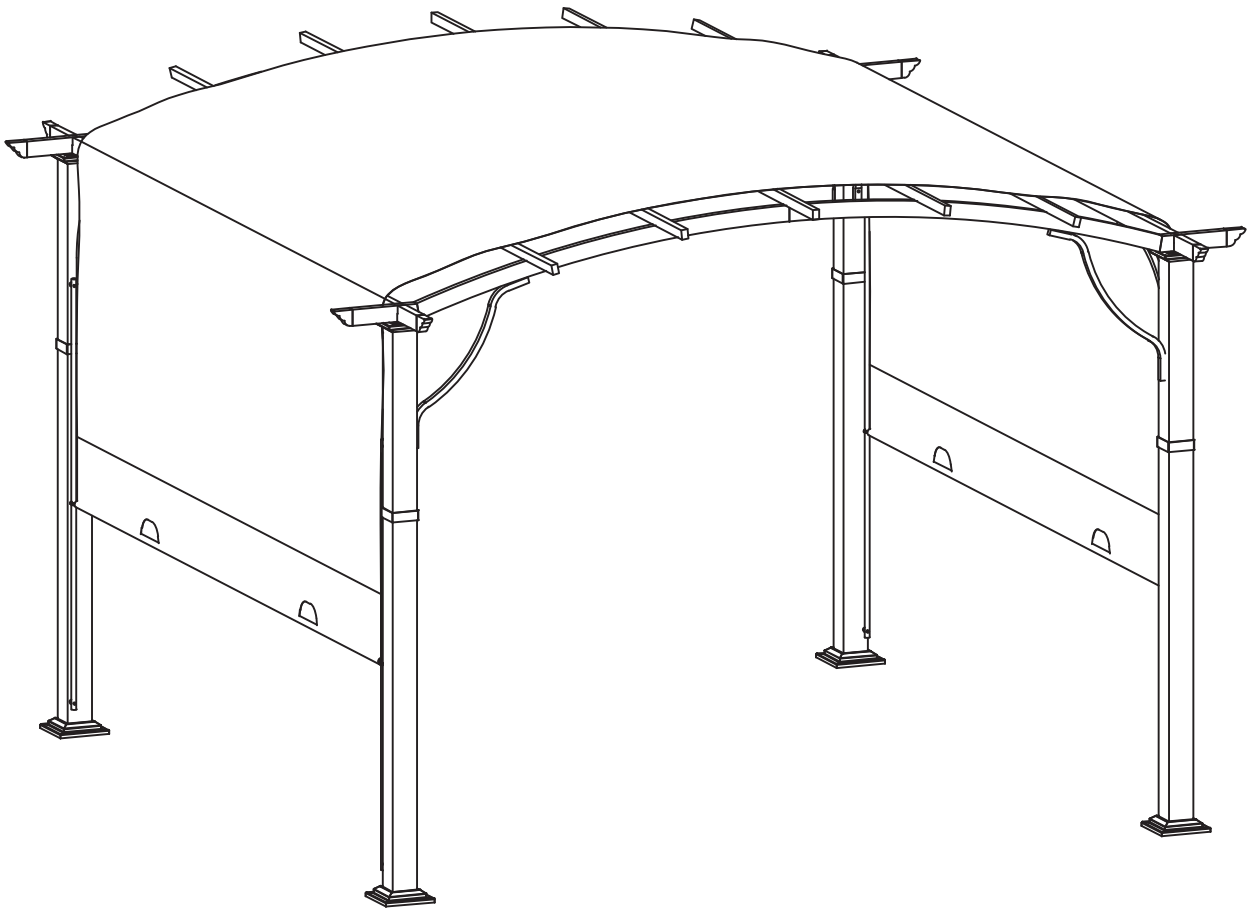

Contact Us

If you have any questions,
Please contact customer servicce.
Email: Guluk2023@outlook.com

Scan the QR code to watch the installation video.

SCAN
ME!

SAFETY PRECAUTIONS

WARNING

Please read and understand this entire manual before attempting to assemble or install this product.

Some parts man have sharp edges. Please wear protective gloves when assembling or i nstalling this product.

Before beginning assembly, choose and measure out the location on which you want to place your pergola. Make sure your space is large enough. Then,find a large and convenient assembly area where you can lay out and pre-assemble all parts for your Pergola.

Children and pets should be kept from your assembly area if possible. Supervise children and pets if they are in the assembly area.

This item is heavy. Please handle with care. Two or more people are required for this assembly.

CAUTION

- Check every part against the part list before beginning your assembly. If any part is missing or damaged. do not attempt to assemble the product. Instead. please contact us.
- You will need these additional tools: a ladder and an adjustable wrench.
- Once a unit has been pre-assembled as per the instructions, set it aside until later
- We care about you experience. Please feel free to contact ud if you have any questions or issues. We will try to offer you efficient solutions ASAP.

WARRANTY COVERAGE REQUIREMENTS:

- Pictures of the damaged parts.
- The order number of your product.
- Please gather all of this information BEFORE you contact us.
- Do not use this item in a way inconsistent with the manufacturer's instructions, as this could void the product warranty.

PRODUCT WARRANTY INSTRUCTION

Free Warranty Period:

The free warranty period starts from the product receipt date and lasts one year.

Coverage during the Free Warranty Period:

1. If any components of the purchased product are damaged due to non-human-induced reasons natural wear and tear excluded , corresponding new parts will be replaced free of charge.

2. If the entire purchased product is damaged due to non-human -induced reasons natural wear and tear excluded and cannot be further used, corresponding parts or a brand-new product will be replaced free of charge.

Coverage after the Free Warranty Period:

After the warranty period expires, replacement components will be provided to customers at cost price for continued service.

Additional Services:

After purchasing the product, customers can consult our staff for any product-related inquiries.

Contact Email :

Guluk2023@outlook.com

Contact Phone :

9144101739

ACCESSORIES DISPLAY

A

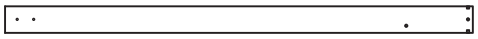

2PCS

A1

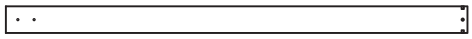

2PCS

B

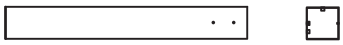

2PCS

B1

2PCS

C

4PCS

D

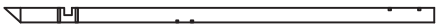

4PCS

E

2PCS

F

5PCS

F1

5PCS

G

4PCS

G1

4PCS

H

2PCS

H1

2PCS

J

4PCS

K

4PCS

K1

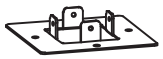

4PCS

L

4PCS

P

2PCS

ACCESSORIES DISPLAY

R	4PCS	S	1PC
T	8PCS	U	4PCS
X	M6*15 52+2PCS	X1	M6*65 16PCS
X2	M6*30 32+2PCS	X3	M6*40 10+1PCS
X4	M6*40 18+1PCS	X5	32+1PCS
	1PC		1PC
	8PCS		8PCS

PRODUCT ASSEMBLY

STEP 1

X

M6*15

32PCS

Repeat 4 times

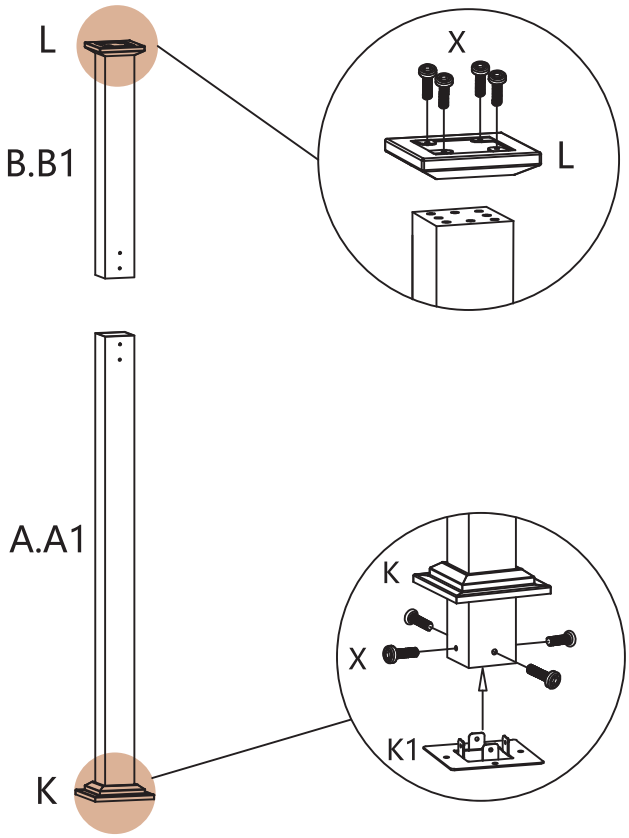

STEP 2

X

M6*15

20PCS

Repeat 2 times

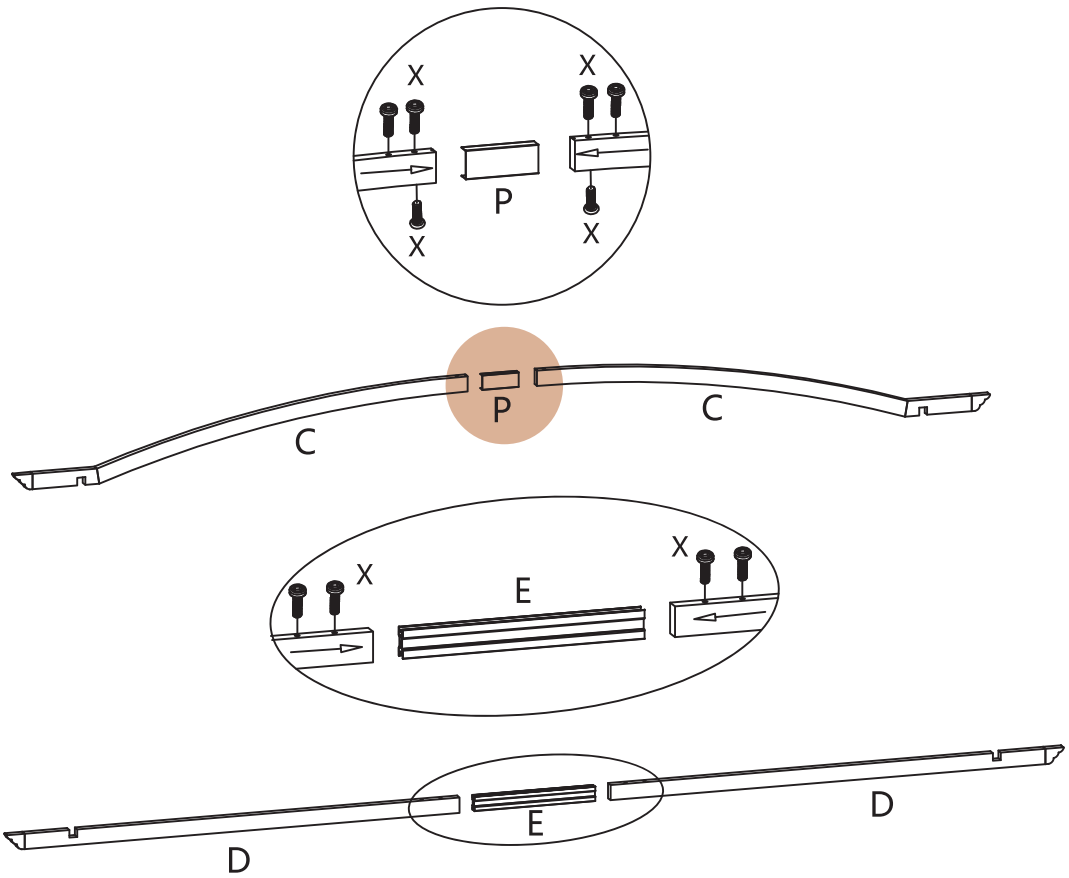

Email:
Guluk2023@outlook.com

PRODUCT ASSEMBLY

STEP 3

X1

M6*65

16PCS

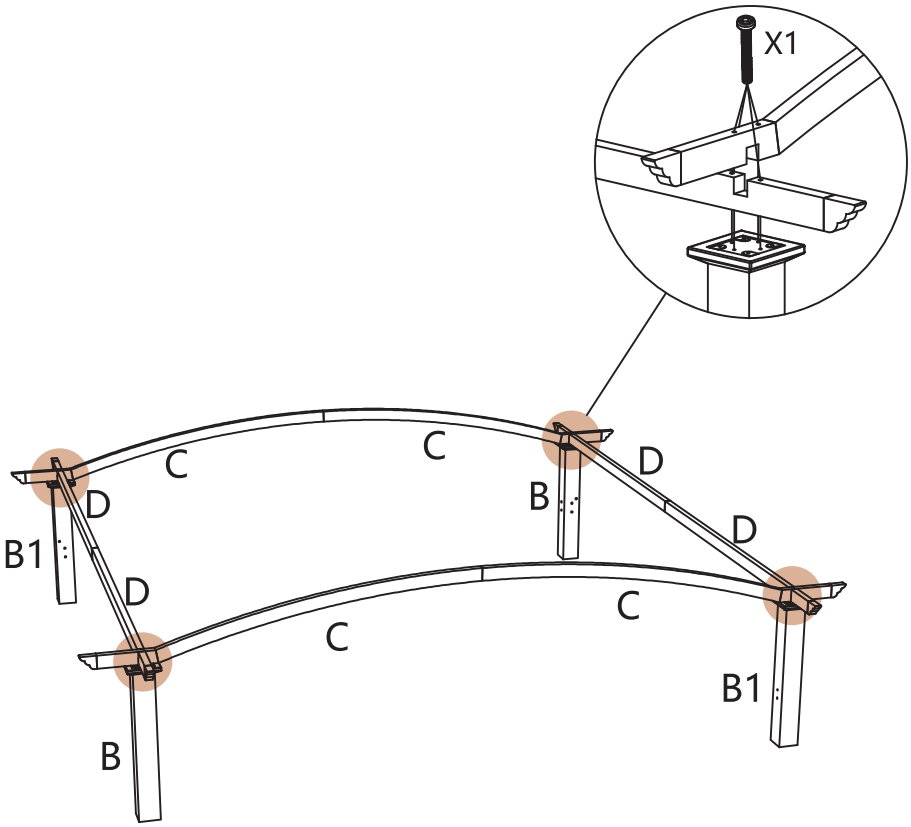

STEP 4

X2

M6*65

32PCS

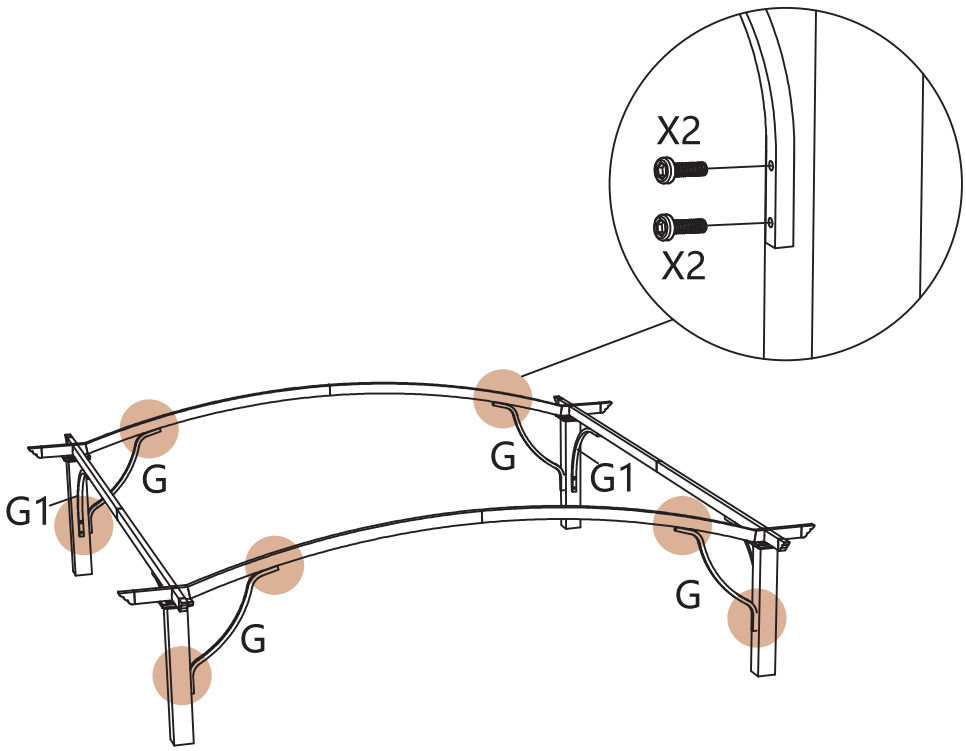

Email:
Guluk2023@outlook.com

STEP 5

X3

10PCS

Repeat 5 times

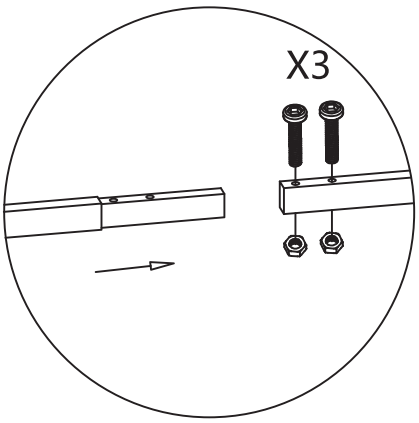

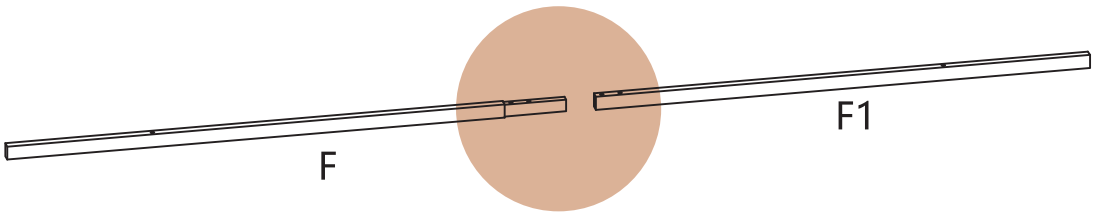

STEP 6

X4

10PCS

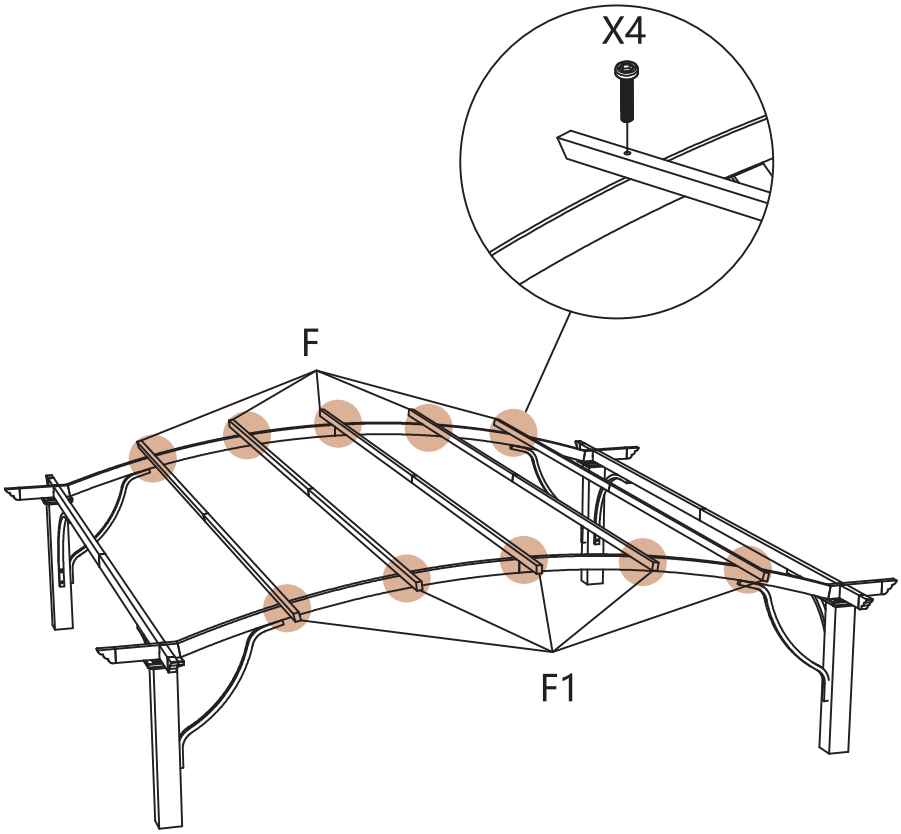

Email:
Guluk2023@outlook.com

STEP 7

X5

32PCS

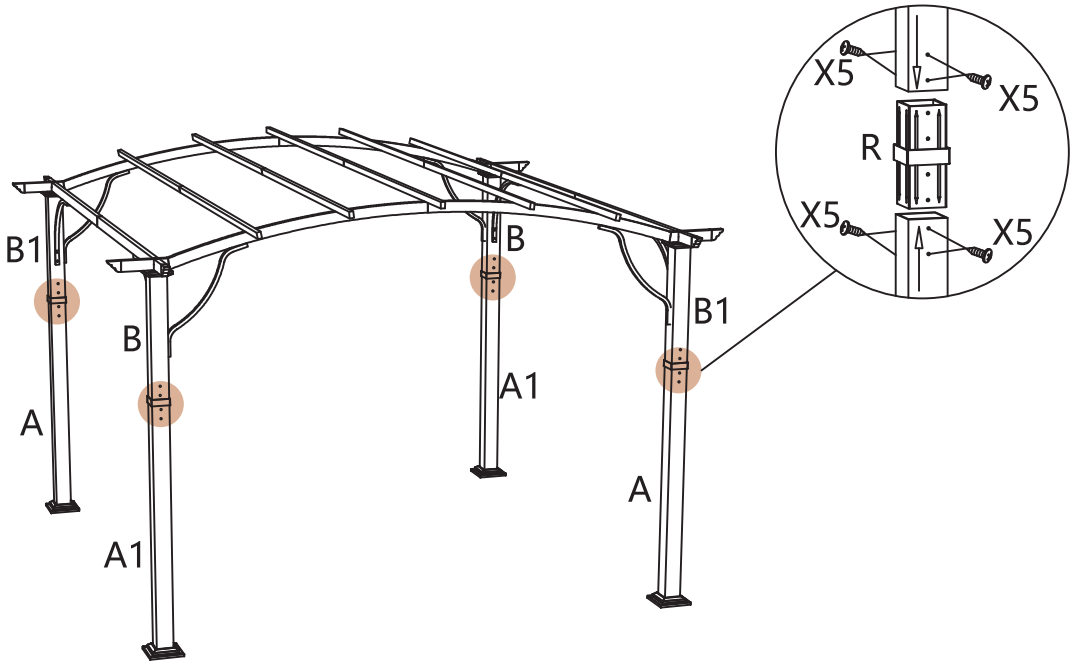

STEP 8

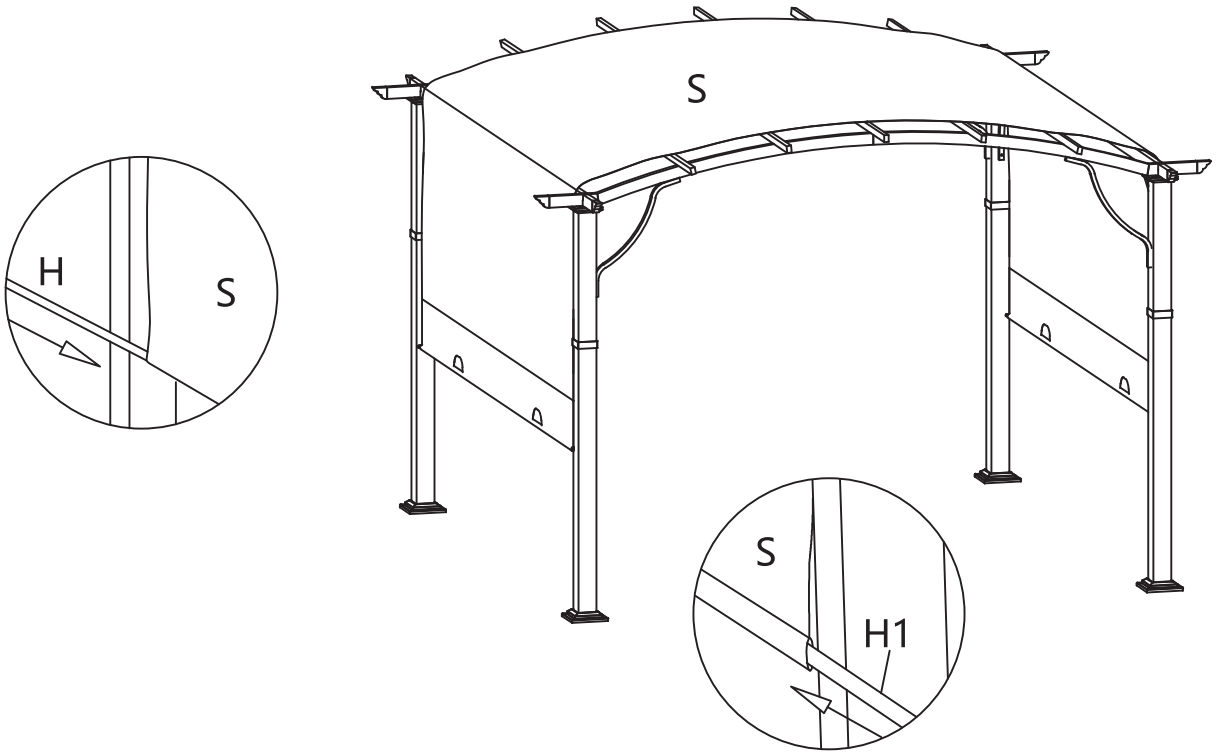

Email:
Guluk2023@outlook.com

STEP 9

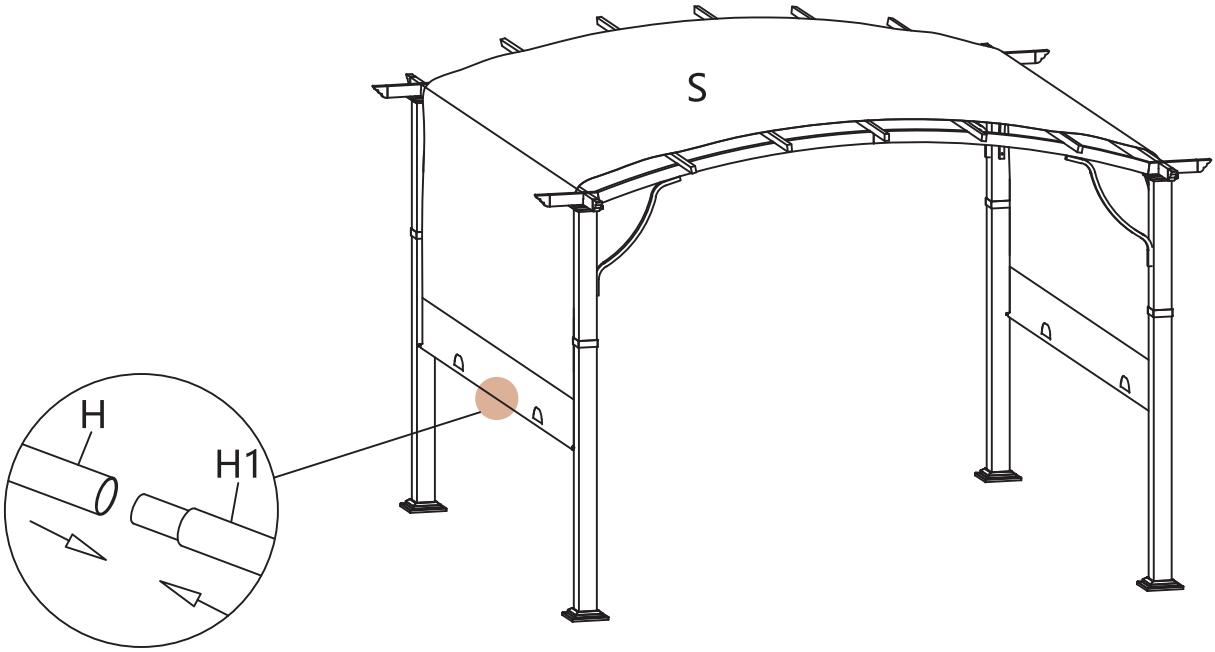

STEP 10

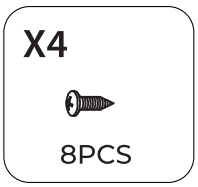

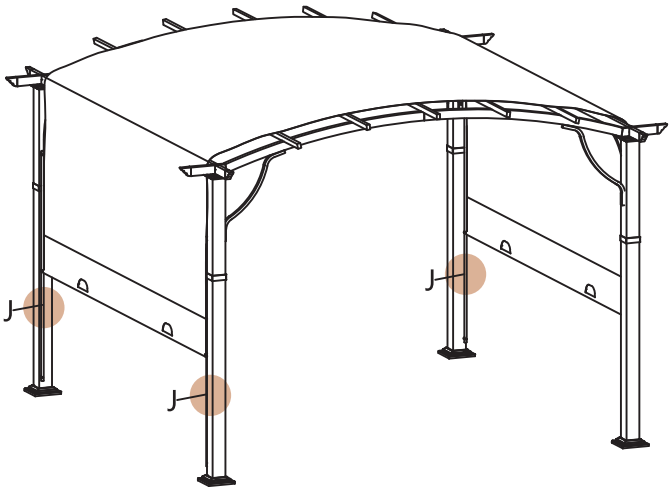

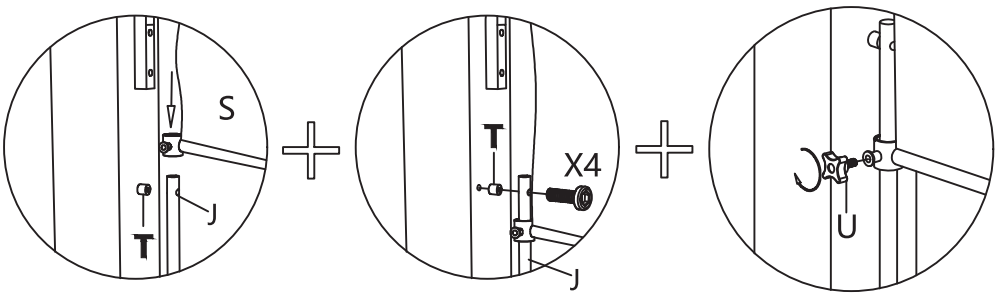

Email:
Guluk2023@outlook.com

STEP 11

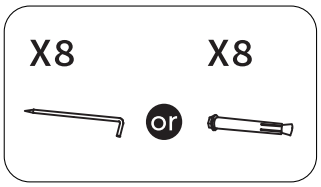

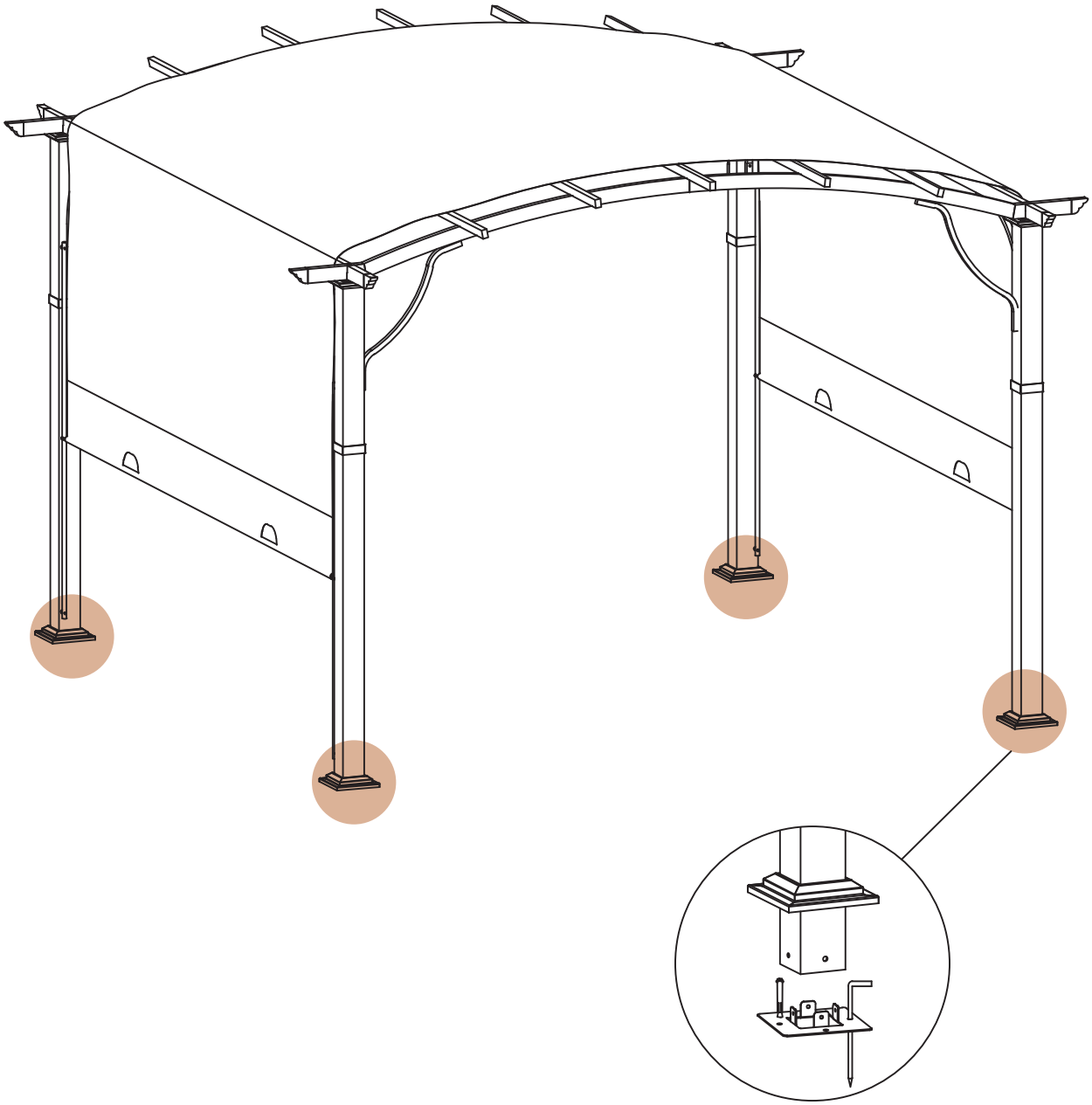

Email:
Guluk2023@outlook.com