Owner Manual

WARRANTY

We strive to offer high quality product and we also try our best to satisfy each customer that order from us, no matter on products or services as needed. Each customer receives a record of their order, such as the order number or item receipt. For any items that are out of warranty period, you may still be able to purchase the replacement parts from our company if they are available.

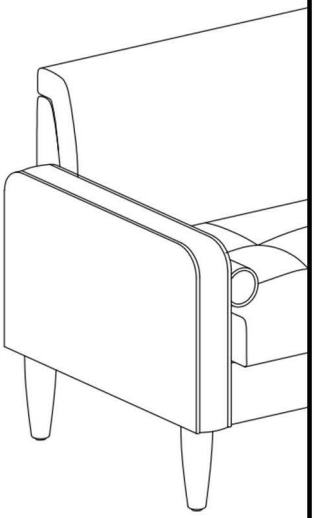

MAINTENANCE AND WARNING

Please read the manual thoroughly before you start installing.

Please keep the product away from sharp object.

Packaging and small parts may have chocking hazard, please keep them away from children and pets.

Please clean the product according to each clean code, check the product description for more information.

Please keep the product away from fire.

If you have any other questions, please contact us, we will be glad to help you out.

If the product is placed under direct sunlight, the pattern or color might fade away overtime.

Check the product periodically to make sure everything is secured and tightened.

Always use proper tools for installation.

Do not jump on the product.

One people

Around 35 min

PRODUCT DESCRIPTION

Solid wood frame and chair legs provide steady support to the whole chair.

The cushions are filled with foam sponge, synthetic fiber and packed springs, which allow the chair has great resilience.

The Corduroy fabric is soft to touch, gives extra seating experience to any users.

Come with 2 cylindrical throw pillows, you can use it as extra cushions for any sitting postures.

Minimalist design makes the chair fit into any home decor seamlessly, perfect for living room, bedroom, or home office etc.

EXPLODED VIEW

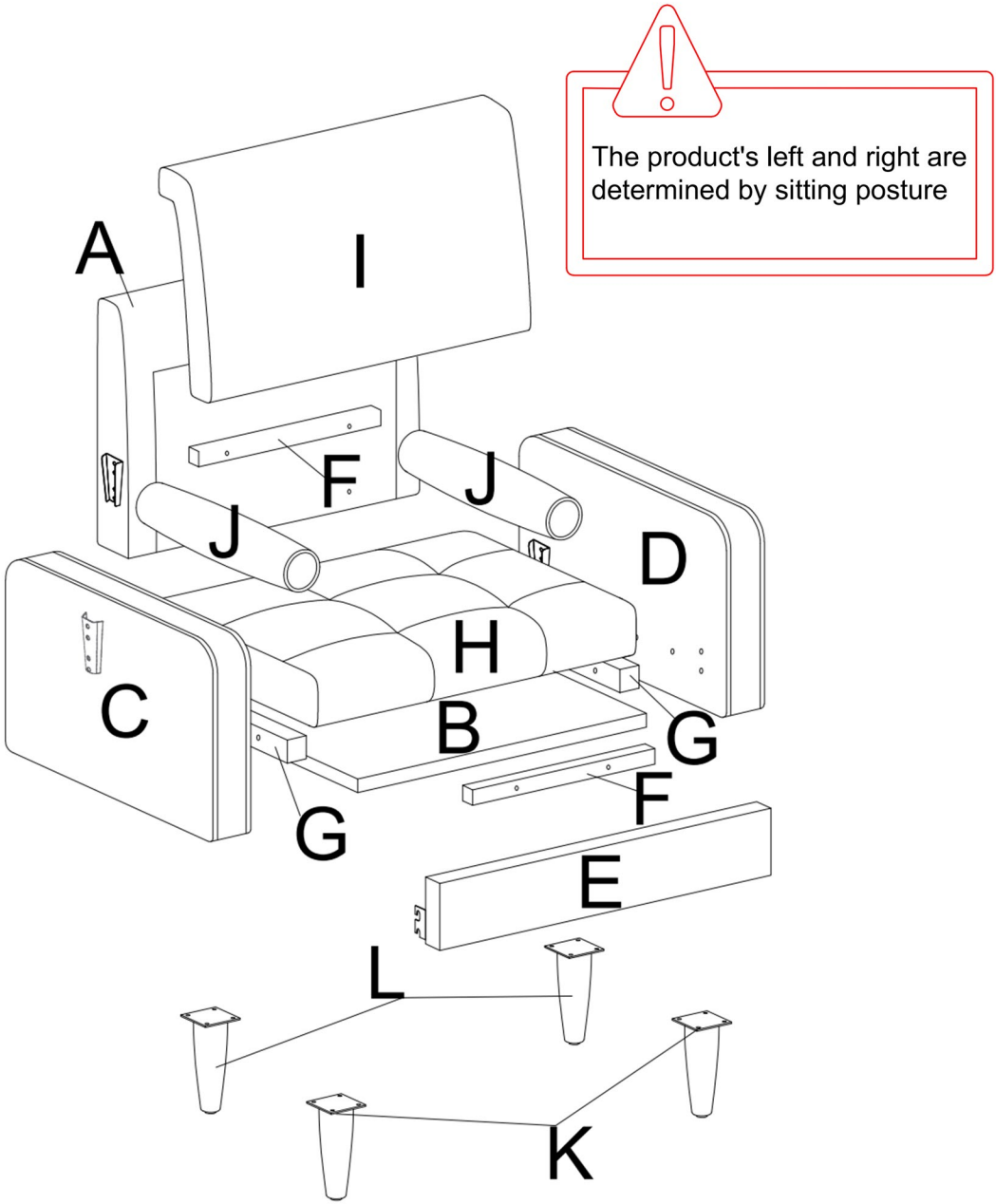

PARTS

Ax1

Back frame

Bx1

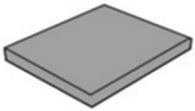

Seat frame

Cx1

Right armrest

Dx1

Left armrest

Ex1

Front rail

Fx2

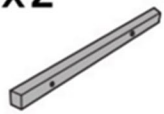

back and front rail bar

Gx2

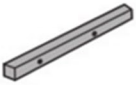

side rail bar

Hx1

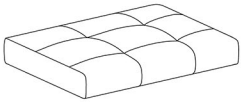

Seat cushion

Ix1

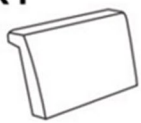

Back cushion

Jx2

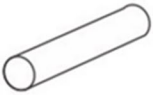

Round throw pillow

Kx2

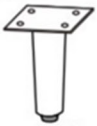

Front leg

Lx2

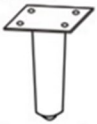

Rear leg

HARDWARE

TOOL LIST

NOTE: Designated with (★) We provide additional spare parts in the hardware package

①*8

★ M6*40mm Bolt

②*20

★ M6*20mm Bolt

④*8

★ Flat washer

⑤*1

★ Allen key

Please make sure all hardware&packing material fitting the list. Especially some small accessories may be missing during transportation. Please contact us if you have any question.

step 1 ---Cut the plastic air compression bags

NOTICE:

We have two packaging for this product: the PU fabric is uncompressed, other fabric cushion are compressed.

First, take out the cushion from the air compression bag. Please allow it to recover for a period of time. it might take up to 48 hours to be fully recovered. You may gently slap on the cushion to speed up the process.

Please exercise caution when opening the packaging to avoid injury or damage to the product.

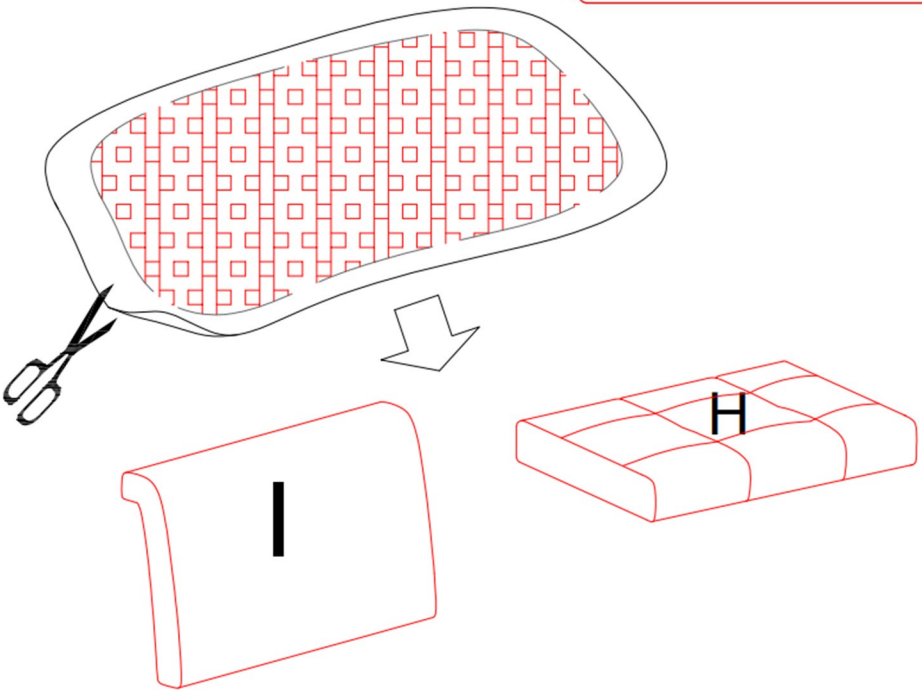

step 2 ---Install the Rail bars(G)

Attach the side rail bars (G) to the armrests (C&D) at the shown position. Place one flat washer (4) before aligning the bolt holes. Then, use the allen wrench (5) to tighten both bolts (1). Make sure they are fully tightened.

Notice:
We suggest tightening the bolts for 30-50% first, make sure the process is correct and bolt holes are aligned, then fully tightening them all.

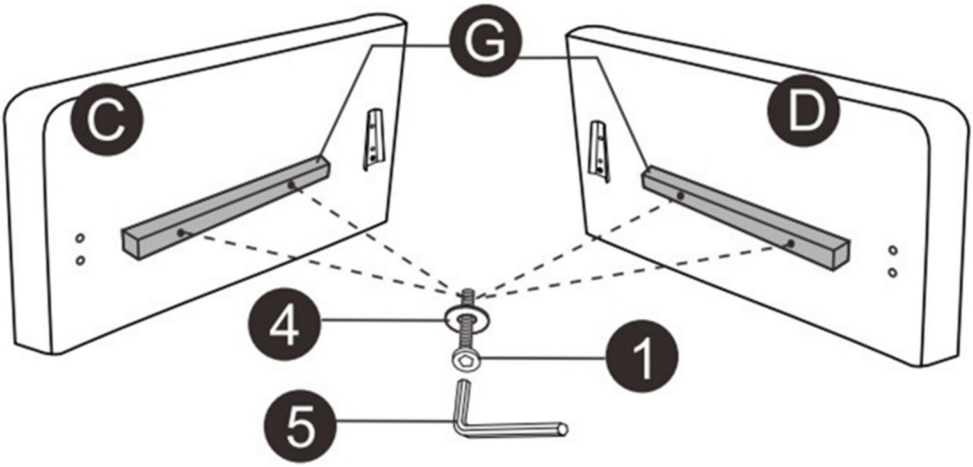

step 3 ---Install the Rail bars(F)

As the diagram shows, install the back rail bar (F) at the bottom of the back frame, and install the front rail bar at the middle part of the front rail (E). Place one flat washer (4) before aligning the bolt holes, then use the allen wrench (5) to tighten both bolts (1), and make sure they are fully tightened.
Install the front rail (E) to the armrests by tightening the bolts (2) on both iron frames on each side of the front rail (E). Make sure they are aligned.

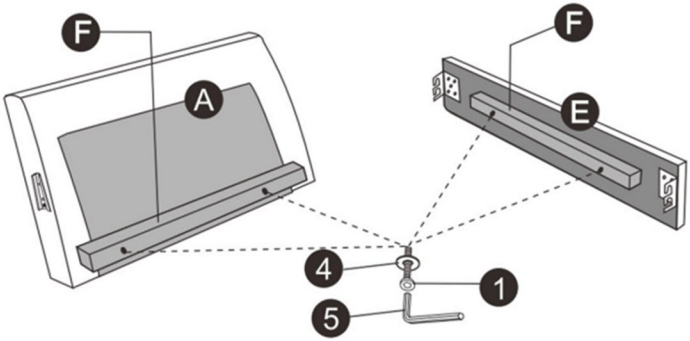

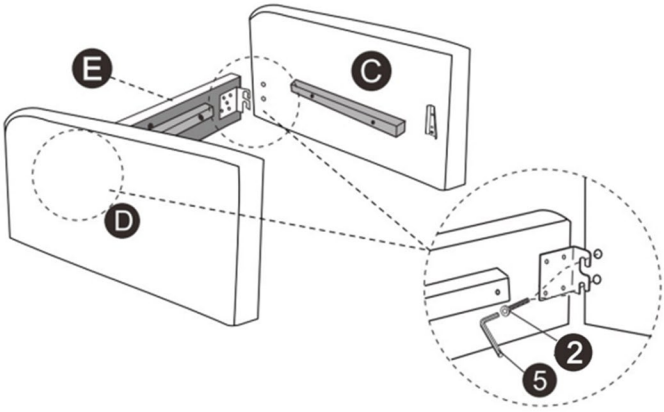

step 4 ---Install the Backrest (A)

Install the backrest (A) to the armrest as shown. Make sure the connector is aligned to the correct slot before pushing down. Please make sure the connectors are fully interlocked into the slots

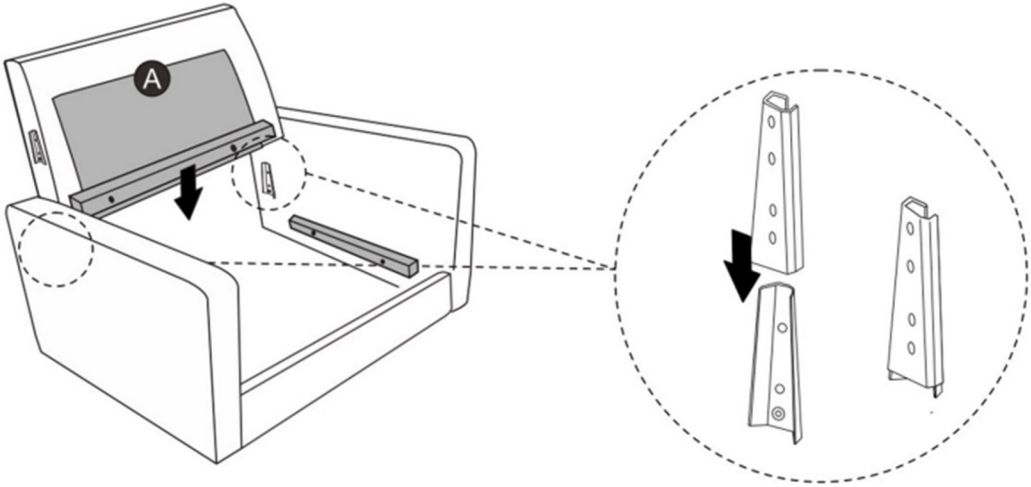

step 5 ---Install the Chair legs (K&L)

Install the chair legs (K & L) to the bottom of the armrests as shown. Use the allen wrench (5) to tighten all bolts (2) for each leg. Make sure they are fully tightened.

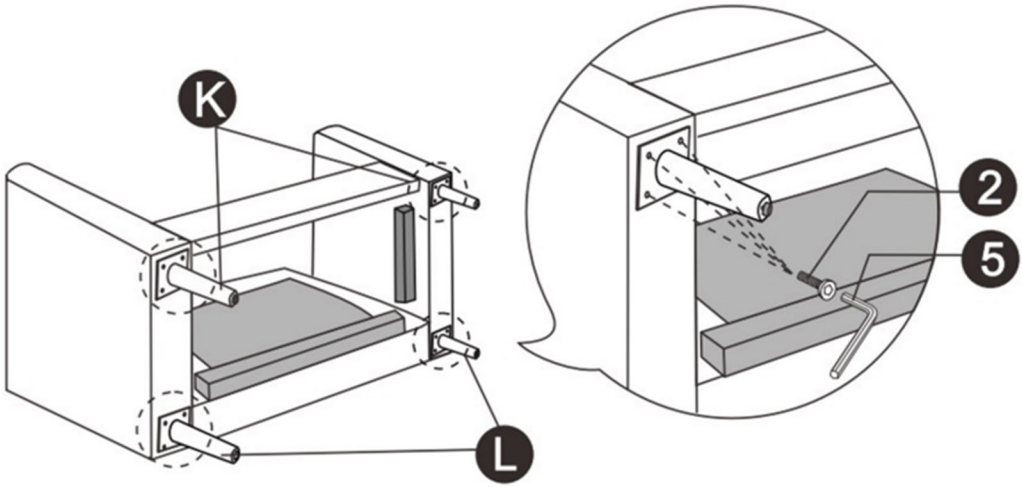

step 6 ---Place the Cushion

Place the seat frame (B) on the pre-installed rail bars as shown. make sure the position of the seat frame is correctly aligned.
Tear off the Velcro strip covers under the seat and back cushions before pasting.
Place the back cushion (I) onto the backrest, then place the seat cushion (H) and throw pillows (J) on the seat as shown.

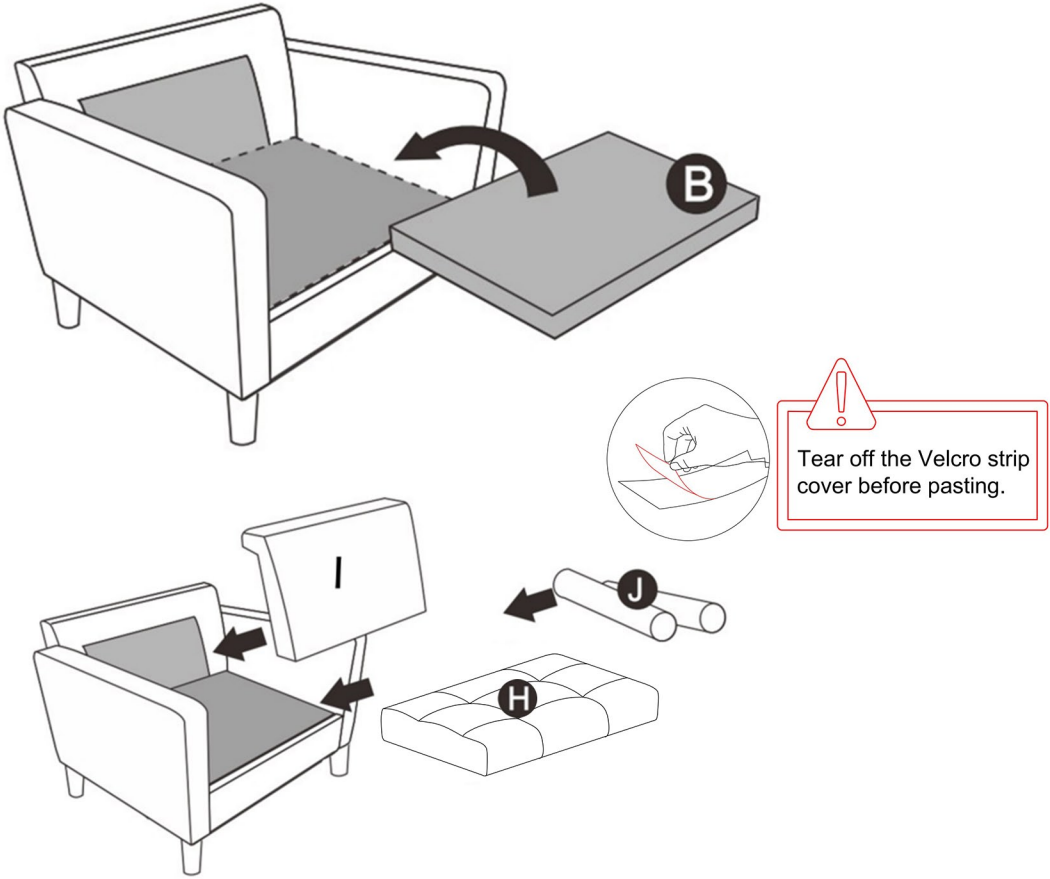

step 7 ---Assemble complete

Please note: the legs of the chair can be adjusted by twisting the leveler on the tip of the legs as shown, it can help you use this chair on ground that is not flat, please check before you use the chair.

Place the chair properly and tidy it up to make it look nice.

Assembly is complete.Thank you for choosing our product!
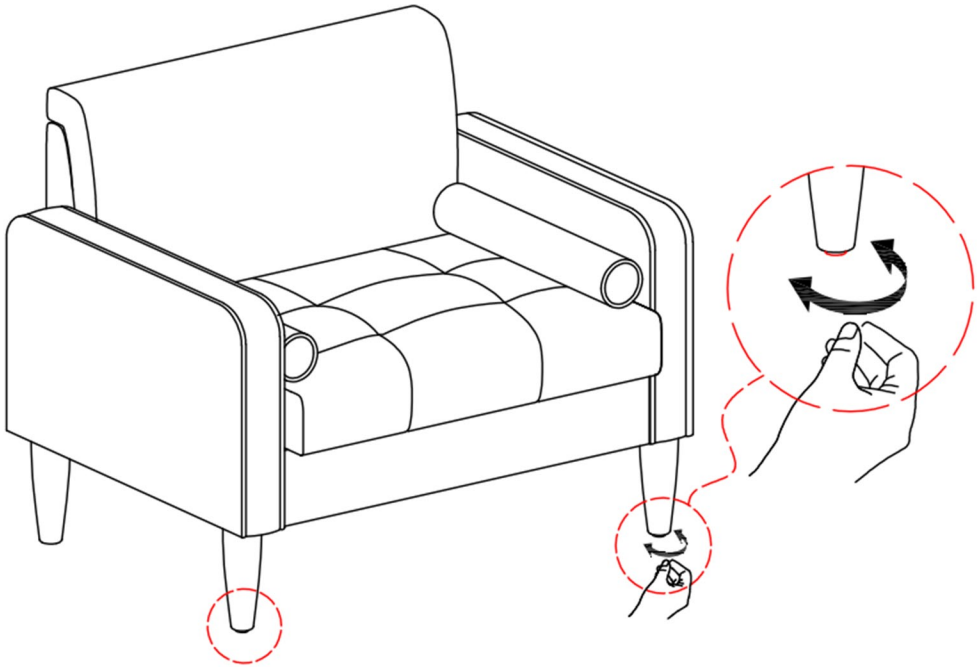
Please enjoy!