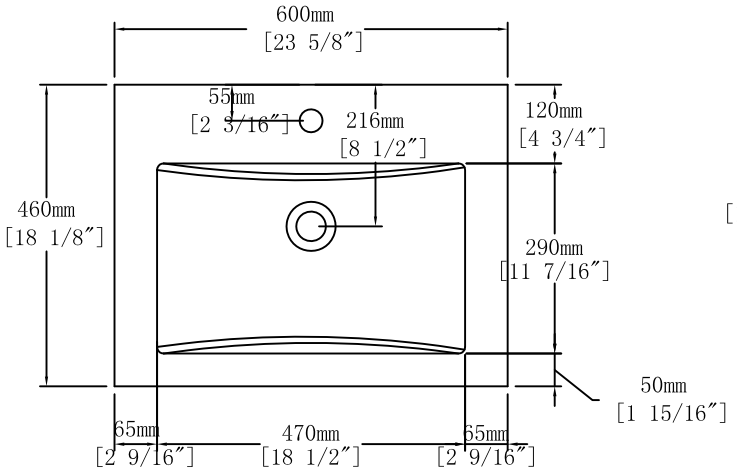
600mm
[23 5/8″]
55mm
[2 3/16″]
216mm
[8 1/2″]
120mm
[4 3/4″]
460mm
[18 1/8″]
290mm
[11 7/16″]
50mm
[1 15/16″]
65mm
[2 9/16″]
470mm
[18 1/2″]
65mm
[2 9/16″]

Top View

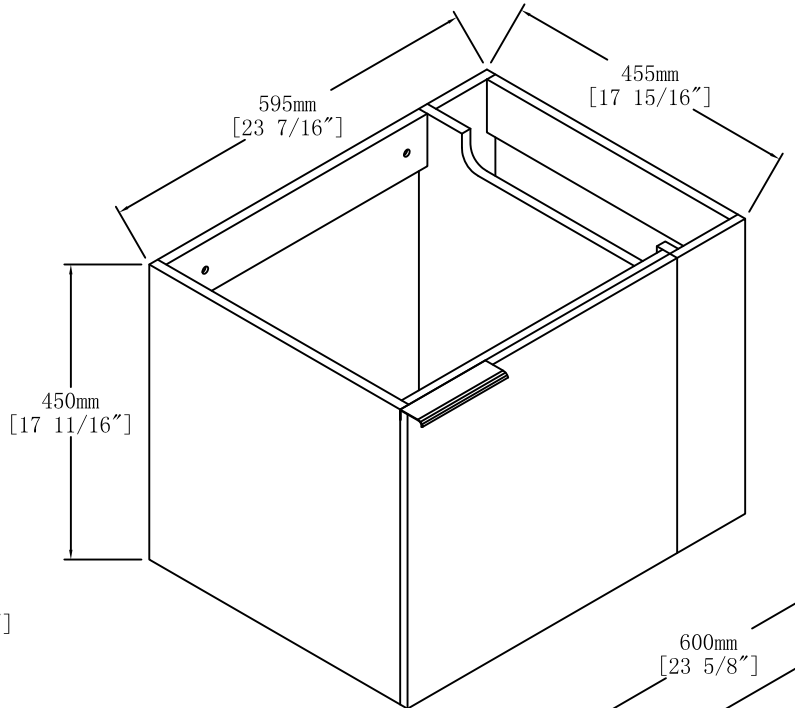
595mm
[23 7/16″]
455mm
[17 15/16″]
450mm
[17 11/16″]

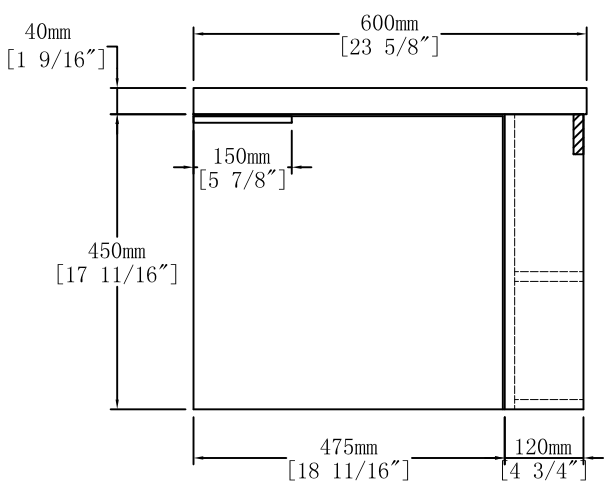
40mm
[1 9/16″]
600mm
[23 5/8″]
150mm
[5 7/8″]
450mm
[17 11/16″]
475mm
[18 11/16″]
120mm
[4 3/4″]

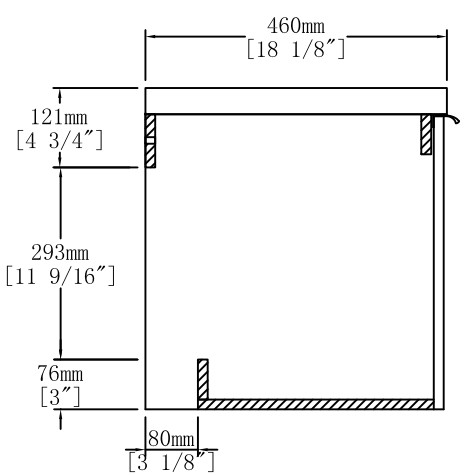
460mm
[18 1/8″]
121mm
[4 3/4″]
293mm
[11 9/16″]
76mm
[3″]
80mm
[3 1/8″]

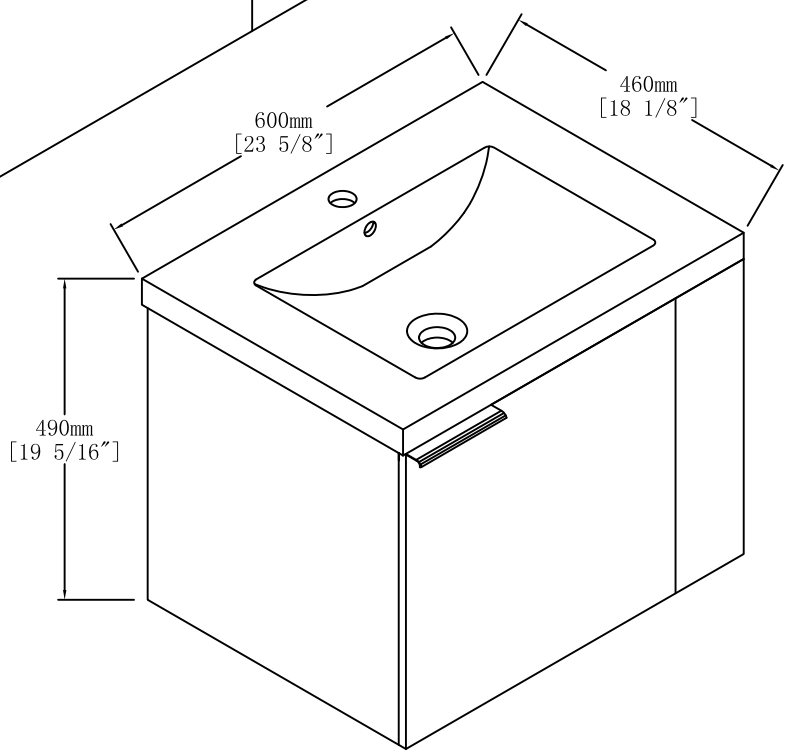
600mm
[23 5/8″]
460mm
[18 1/8″]
490mm
[19 5/16″]