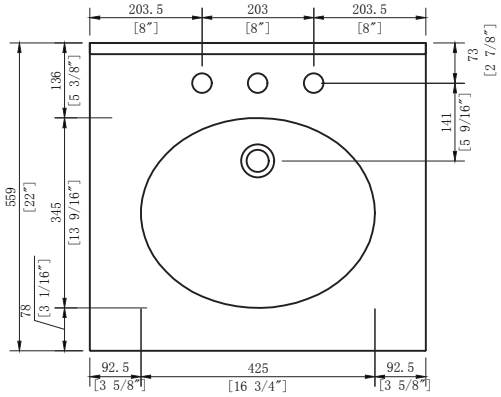
203.5
[8"]
203
[8"]
203.5
[8"]
73
[2 7/8"]
136
[5 3/8"]
141
[5 9/16"]
559
[22"]
345
[13 9/16"]
78
[3 1/16"]
92.5
[3 5/8"]
425
[16 3/4"]
92.5
[3 5/8"]

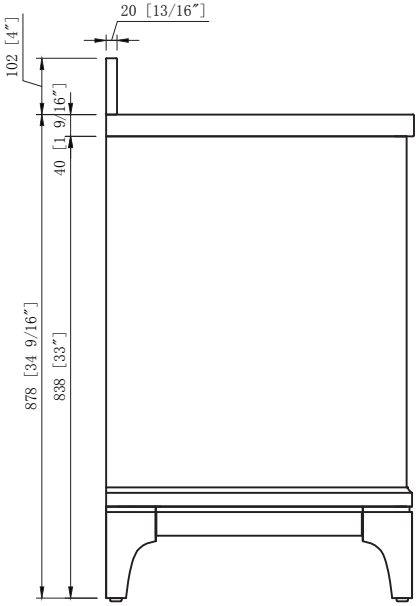
20 [13/16"]
102 [4"]
40 [1 9/16"]
878 [34 9/16"]
838 [33"]

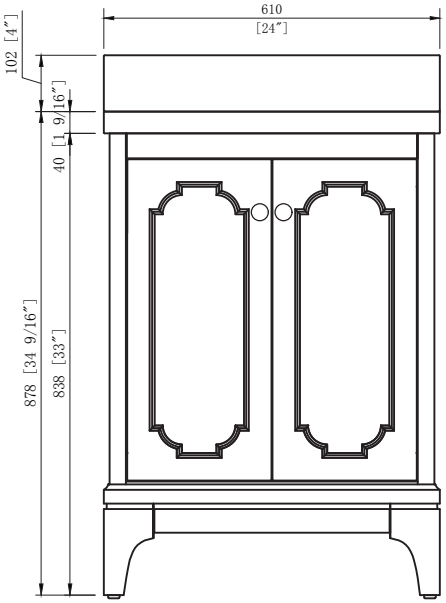
610
[24"]
102 [4"]
40 [1 9/16"]
878 [34 9/16"]
838 [33"]

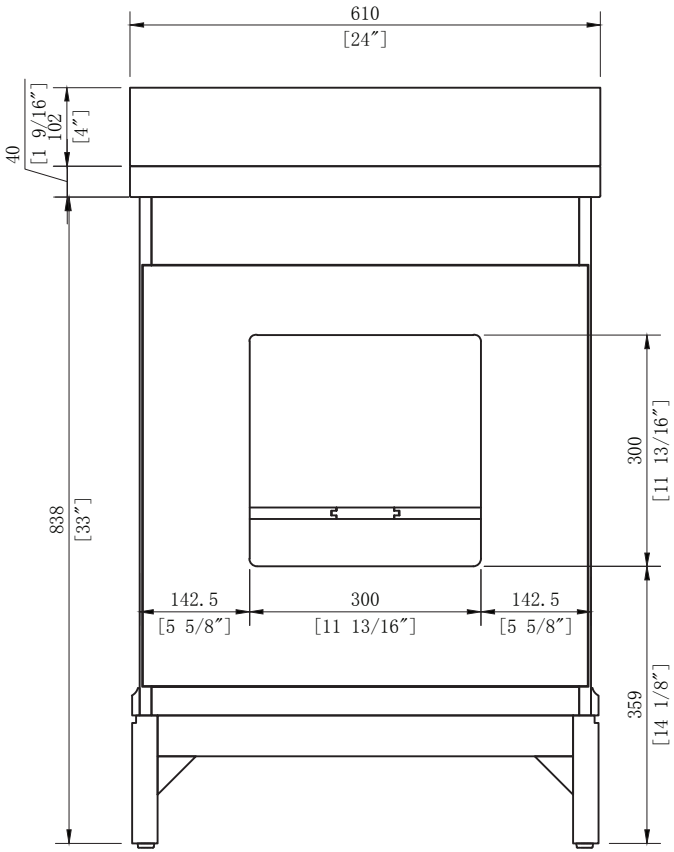
610
[24″]
40
[1 9/16″]
102
[4″]
838
[33″]
300
[11 13/16″]
142.5
[5 5/8″]
300
[11 13/16″]
142.5
[5 5/8″]
359
[14 1/8″]

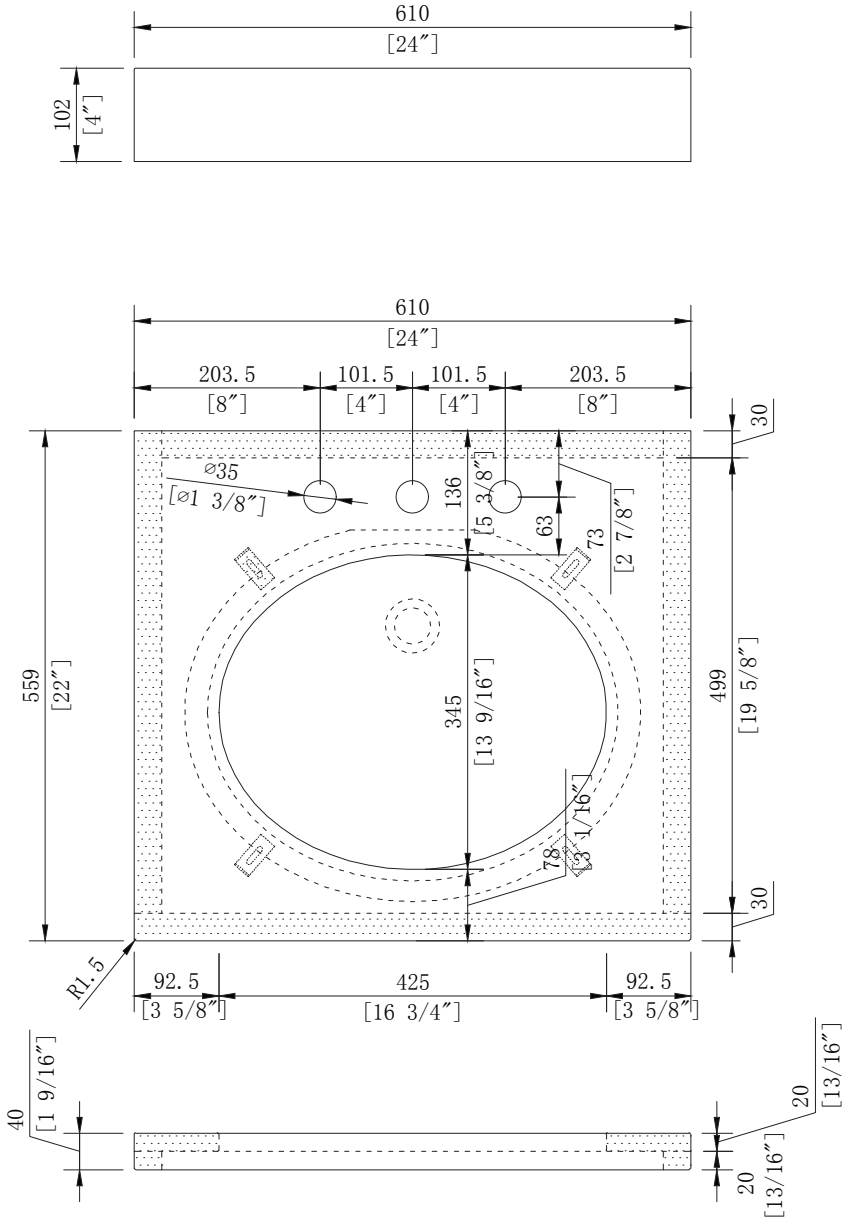
610
[24″]
102
[4″]
610
[24″]
203.5
[8″]
101.5
[4″]
101.5
[4″]
203.5
[8″]
559
[22″]
499
[19 5/8″]
30
30
⌀35
[⌀1 3/8″]
136
[5 3/8″]
63
73
[2 7/8″]
345
[13 9/16″]
78
[3 1/16″]
R1.5
92.5
[3 5/8″]
425
[16 3/4″]
92.5
[3 5/8″]
40
[1 9/16″]
20
[13/16″]
20
[13/16″]

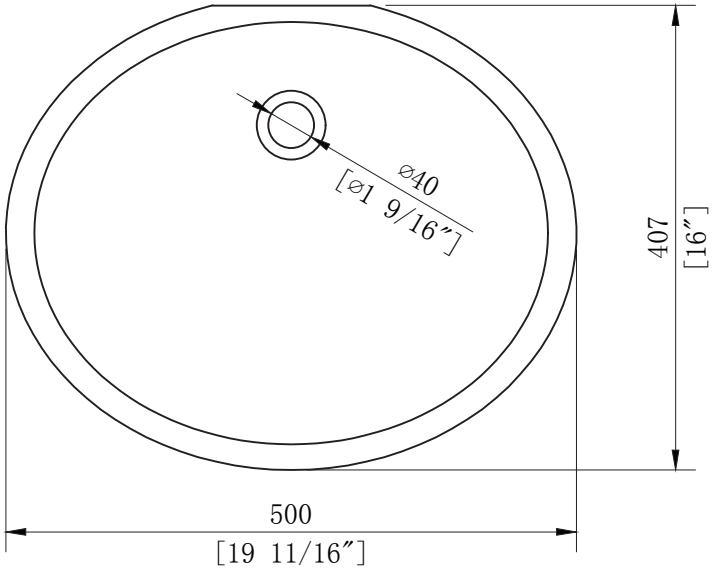
⌀40
[⌀1 9/16″]
407
[16″]
500
[19 11/16″]

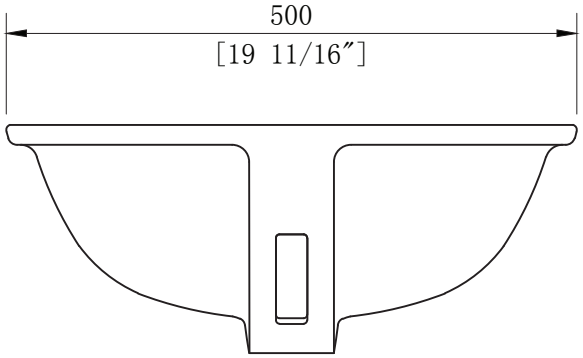
500
[19 11/16″]

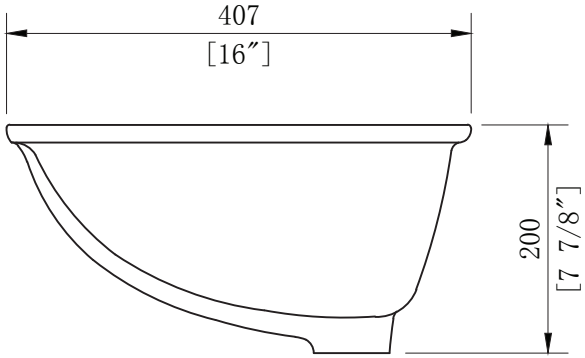
407
[16″]
200
[7 7/8″]

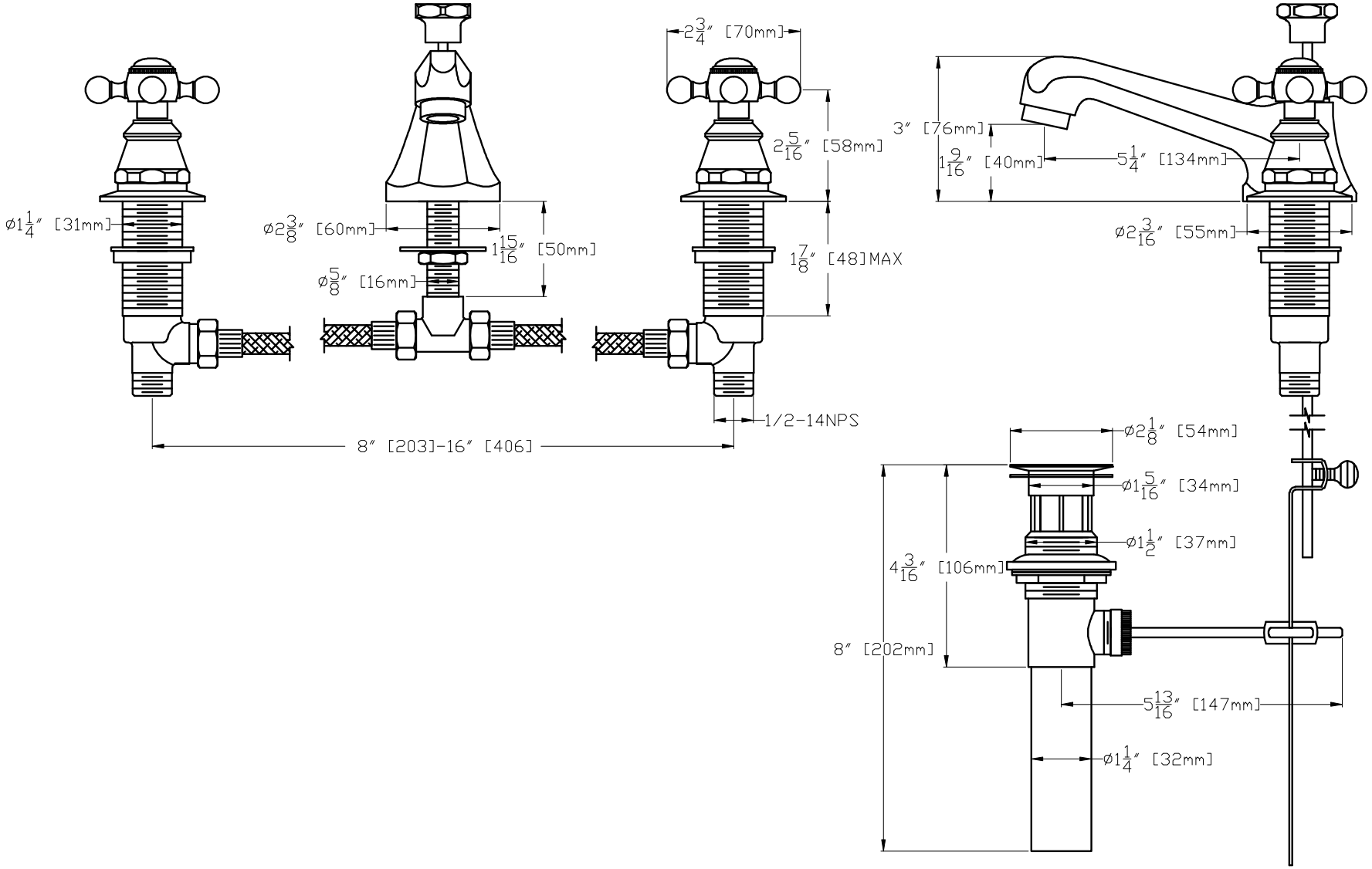
2 3/4″ [70mm]
2 5/16″ [58mm]
3″ [76mm]
1 9/16″ [40mm]
5 1/4″ [134mm]
ø1 1/4″ [31mm]
ø2 3/8″ [60mm]
1 15/16″ [50mm]
ø5/8″ [16mm]
1 7/8″ [48]MAX
ø2 3/16″ [55mm]
1/2-14NPS
8″ [203]-16″ [406]
ø2 1/8″ [54mm]
ø1 5/16″ [34mm]
ø1 1/2″ [37mm]
4 3/16″ [106mm]
8″ [202mm]
5 13/16″ [147mm]
ø1 1/4″ [32mm]