Square dining table

Product ID. 7LWNZ

Scan for Support
support@garvee.com

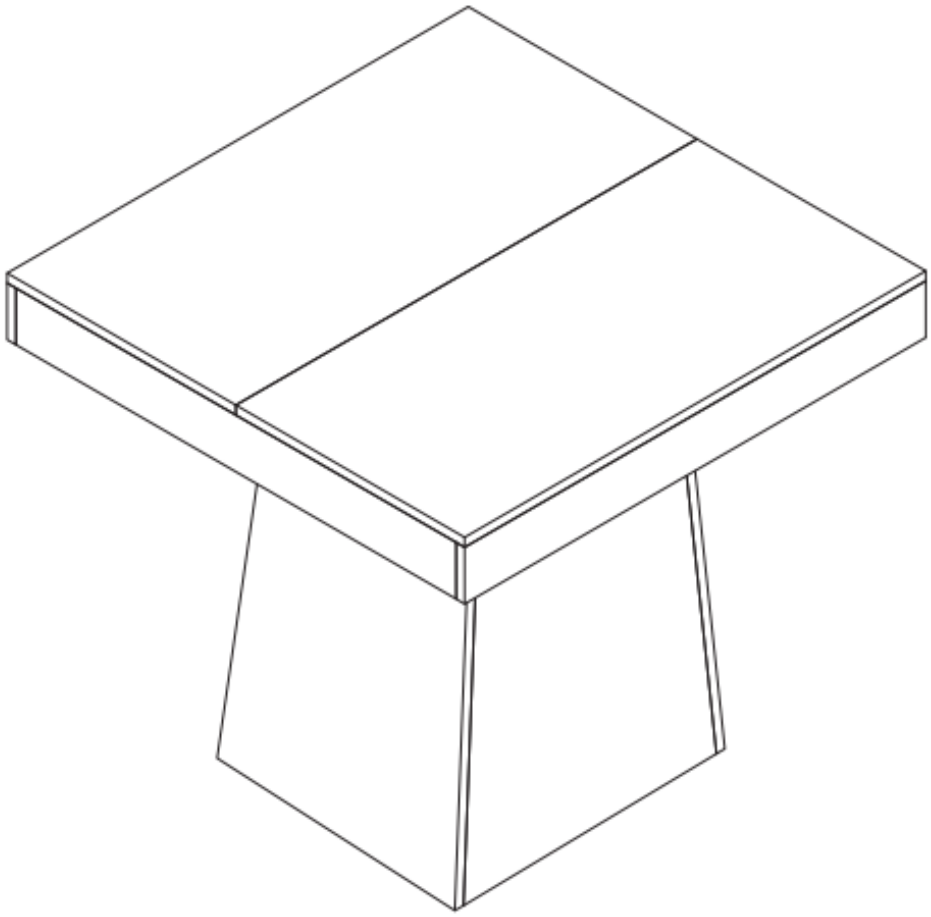

Distributed by
GARVEE.com

V2610140JKE

Instructions

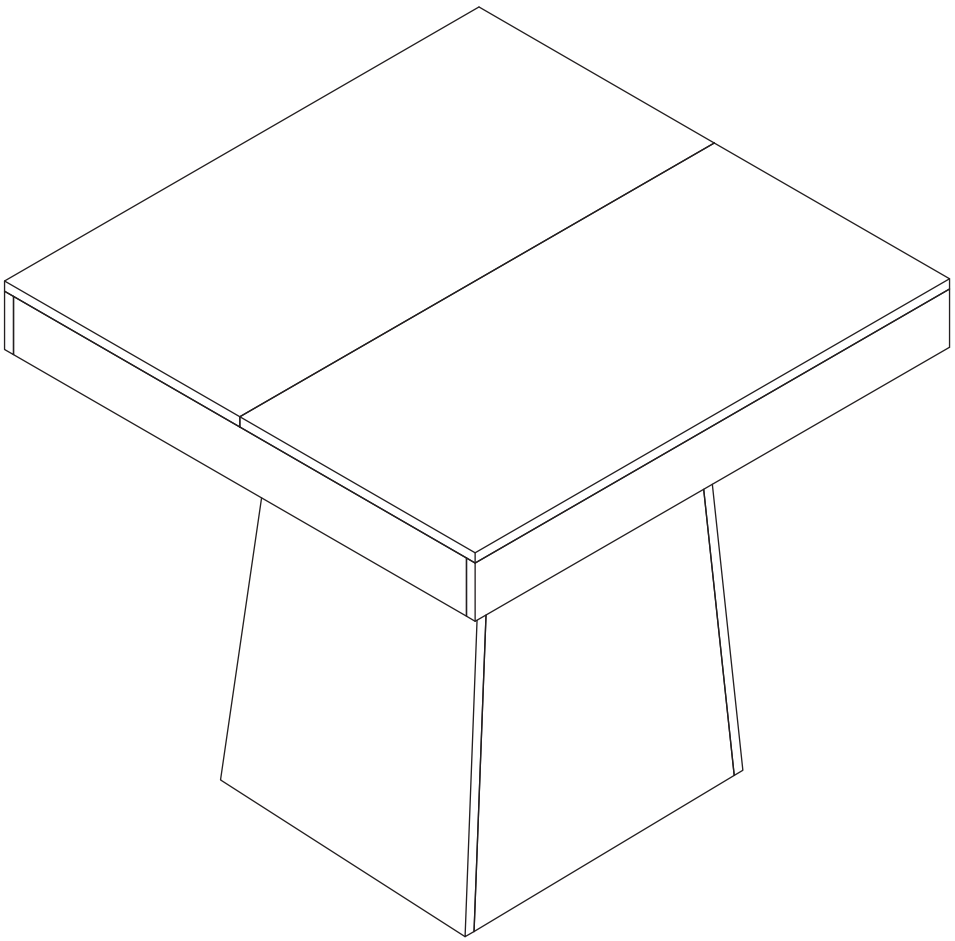

PARTS

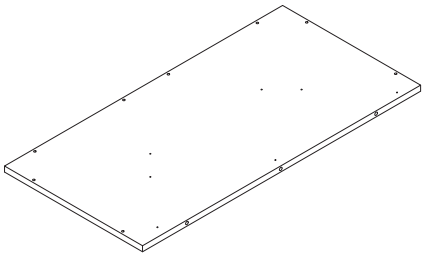

1 × 2

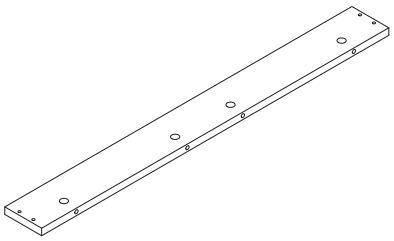

2 × 2

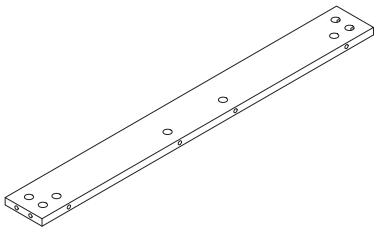

3 × 2

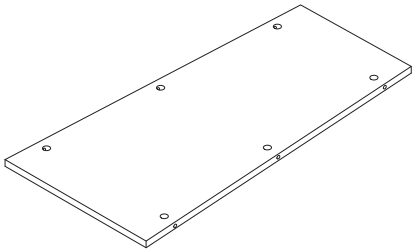

4 × 2

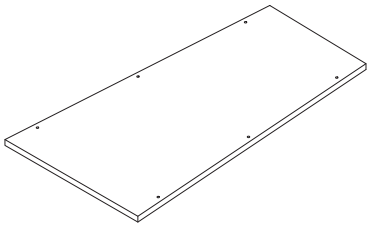

5 × 2

HARDWARE



M6x35mm

A × 36+2



Φ15x9mm

B × 36+2

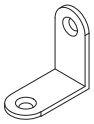

C × 8

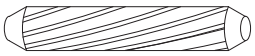

Φ6x30mm

D × 3

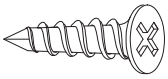

M3x12mm

E × 22+2

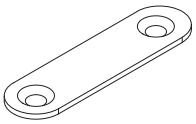

F × 3

EXPLOSION VIEW

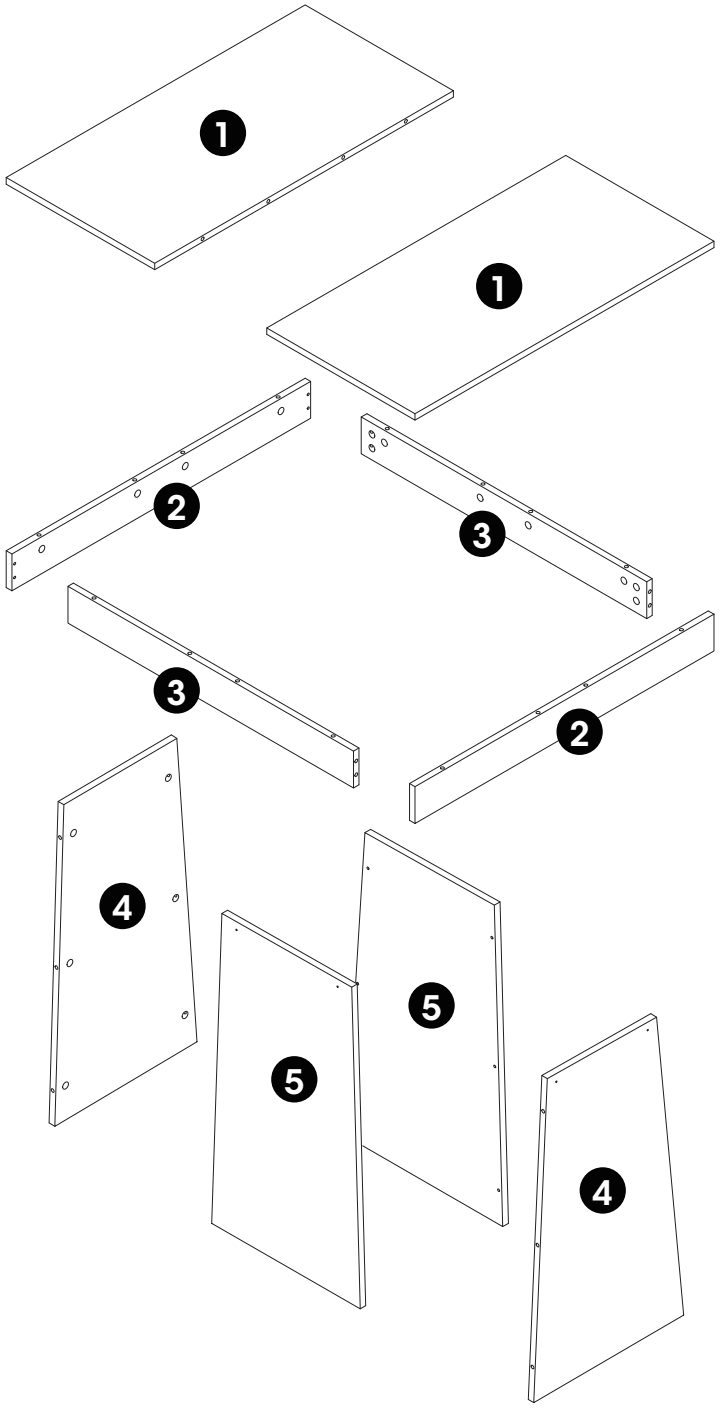

1

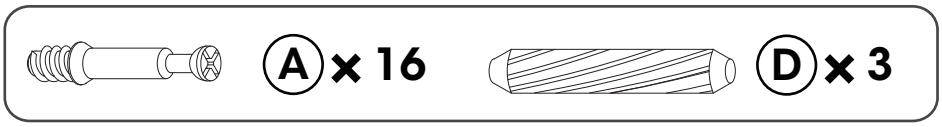

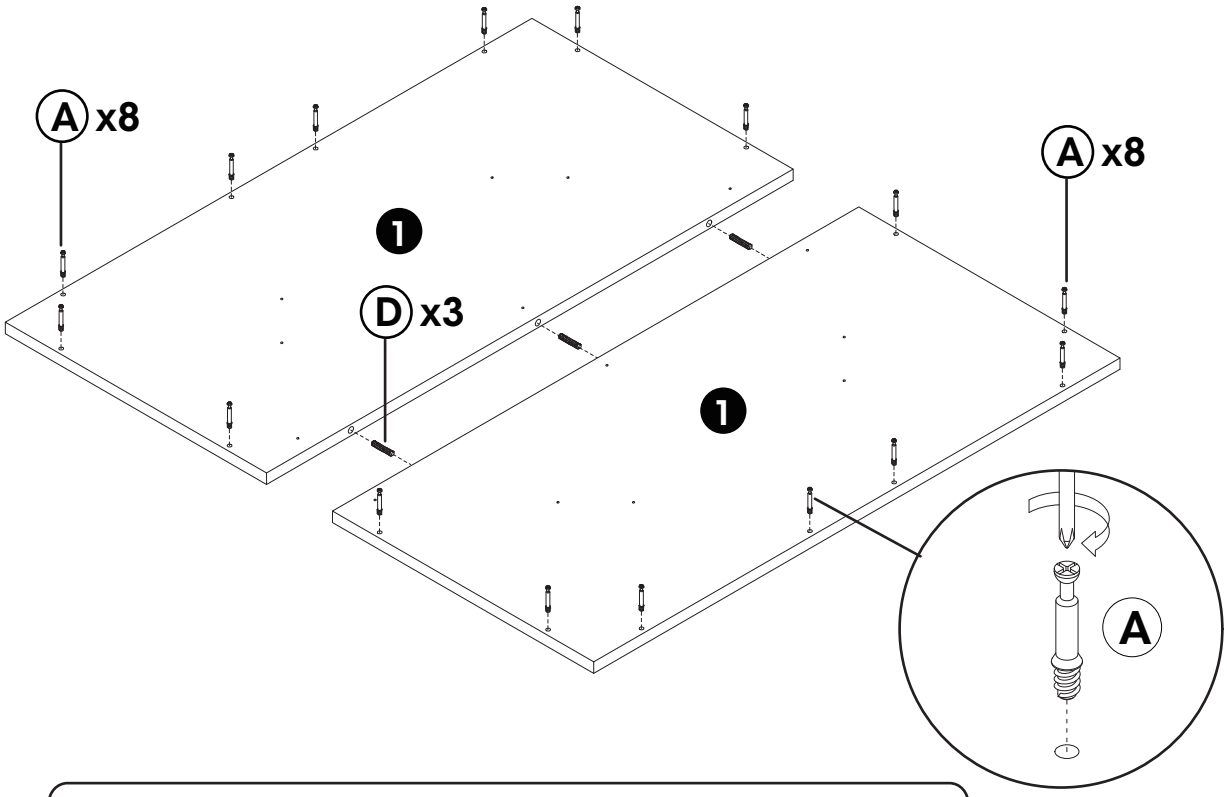

2

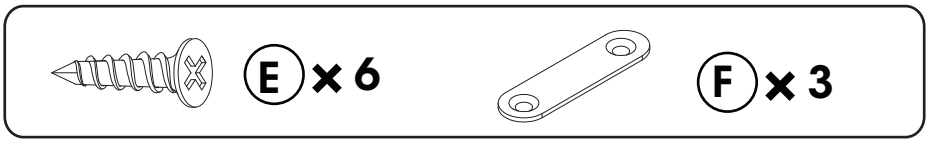

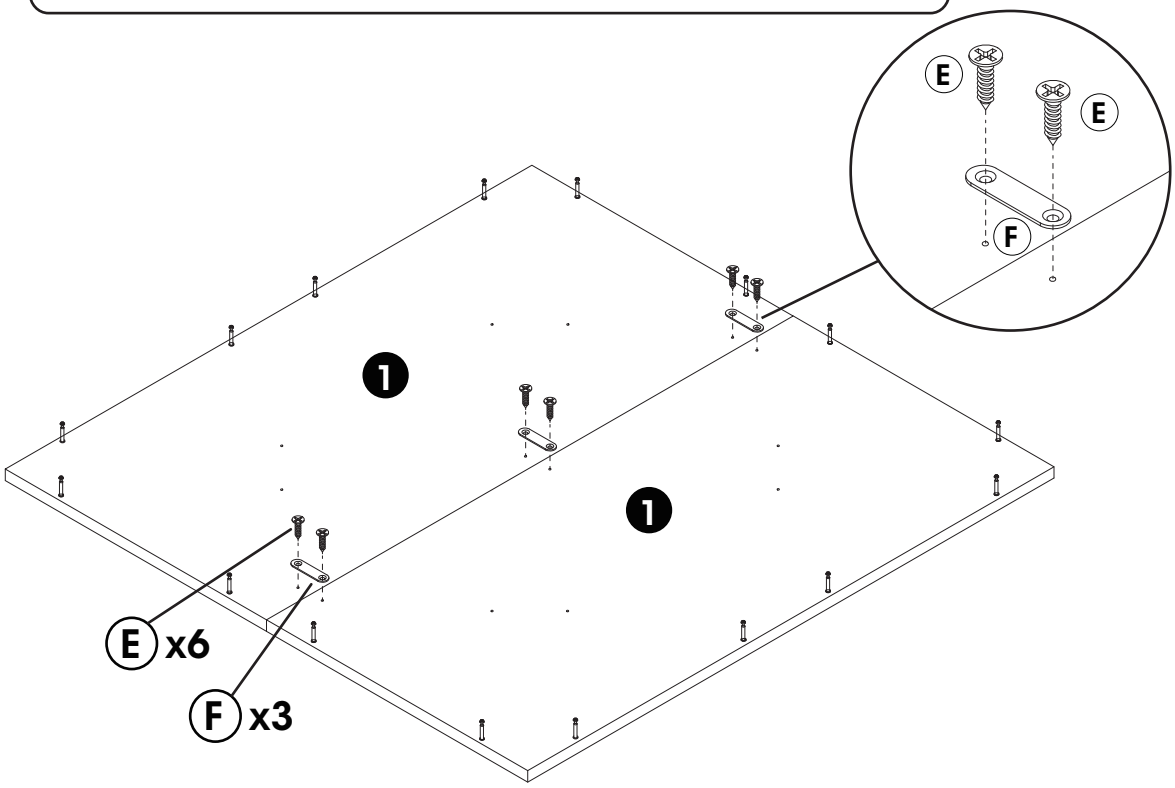

3

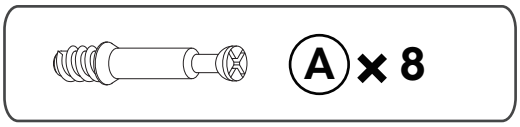

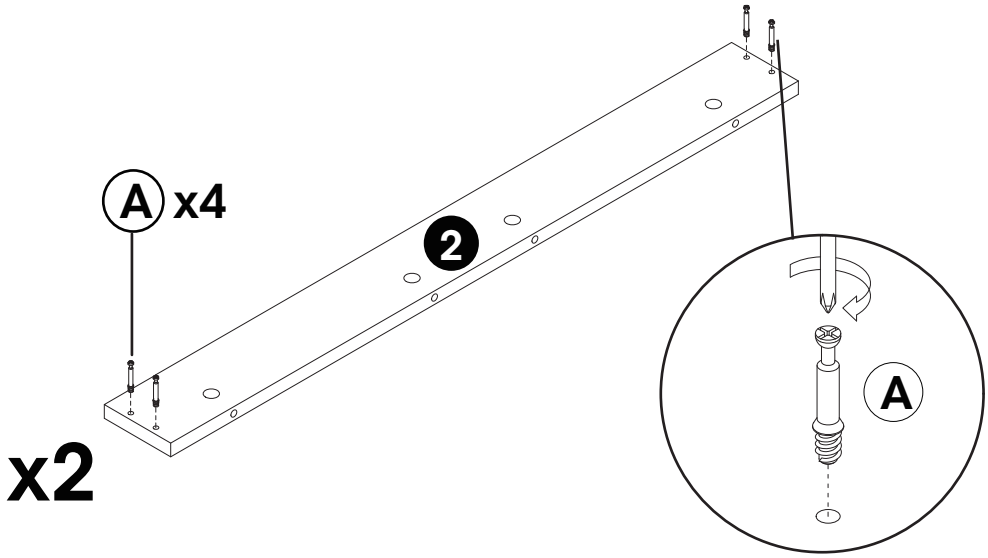

4

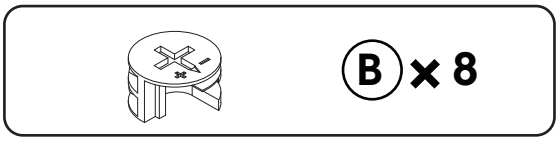

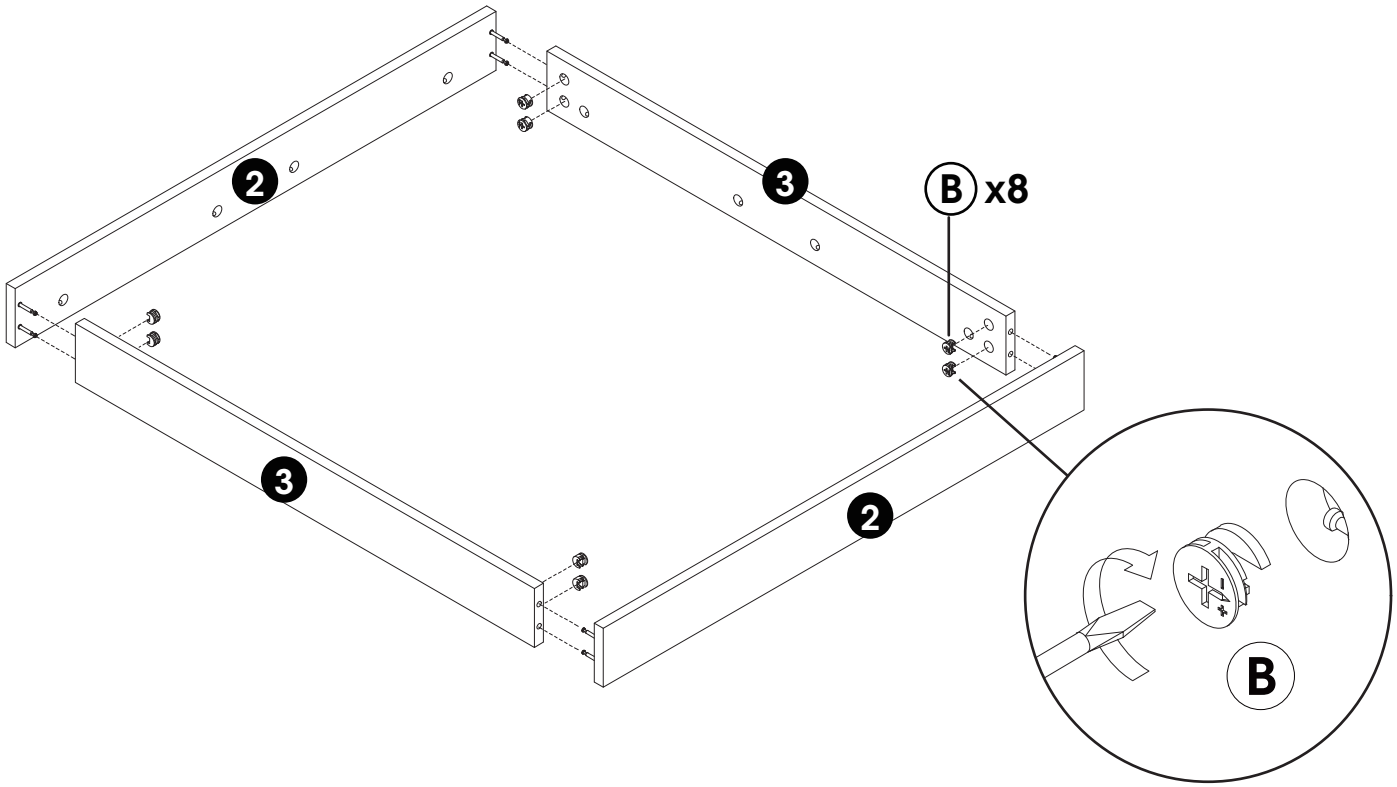

5

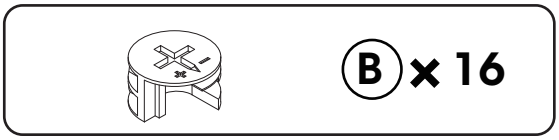

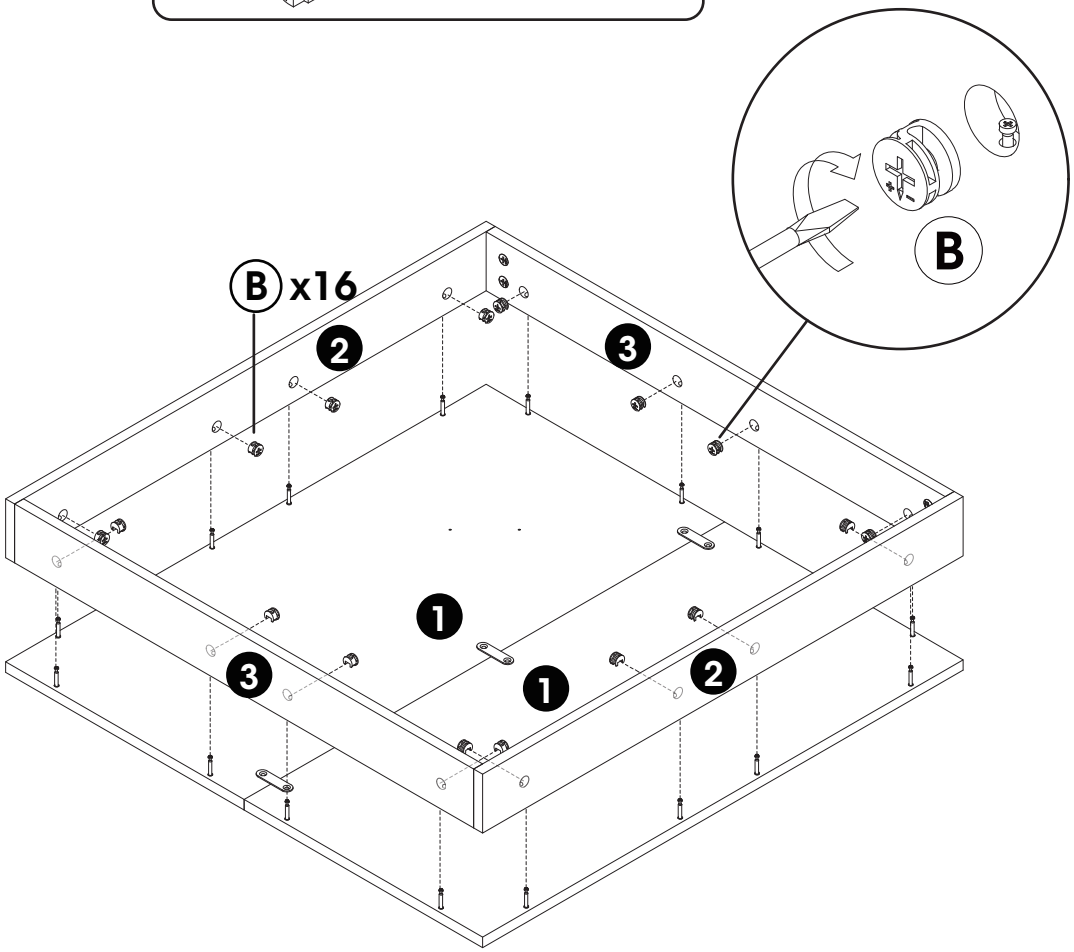

6

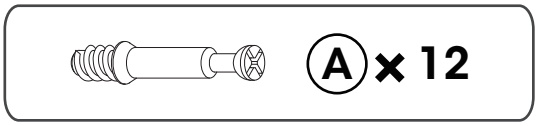

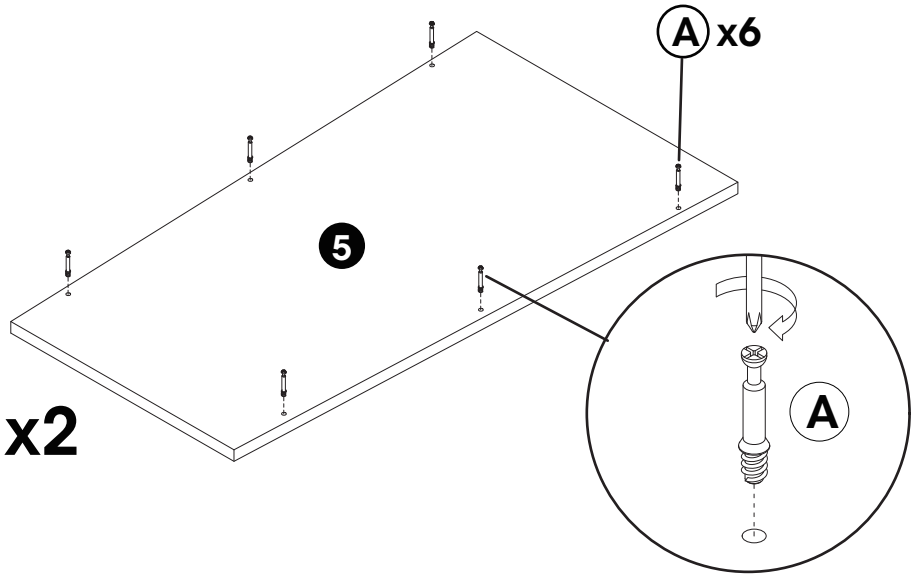

7

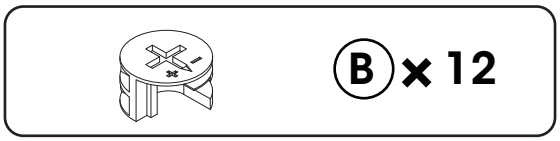

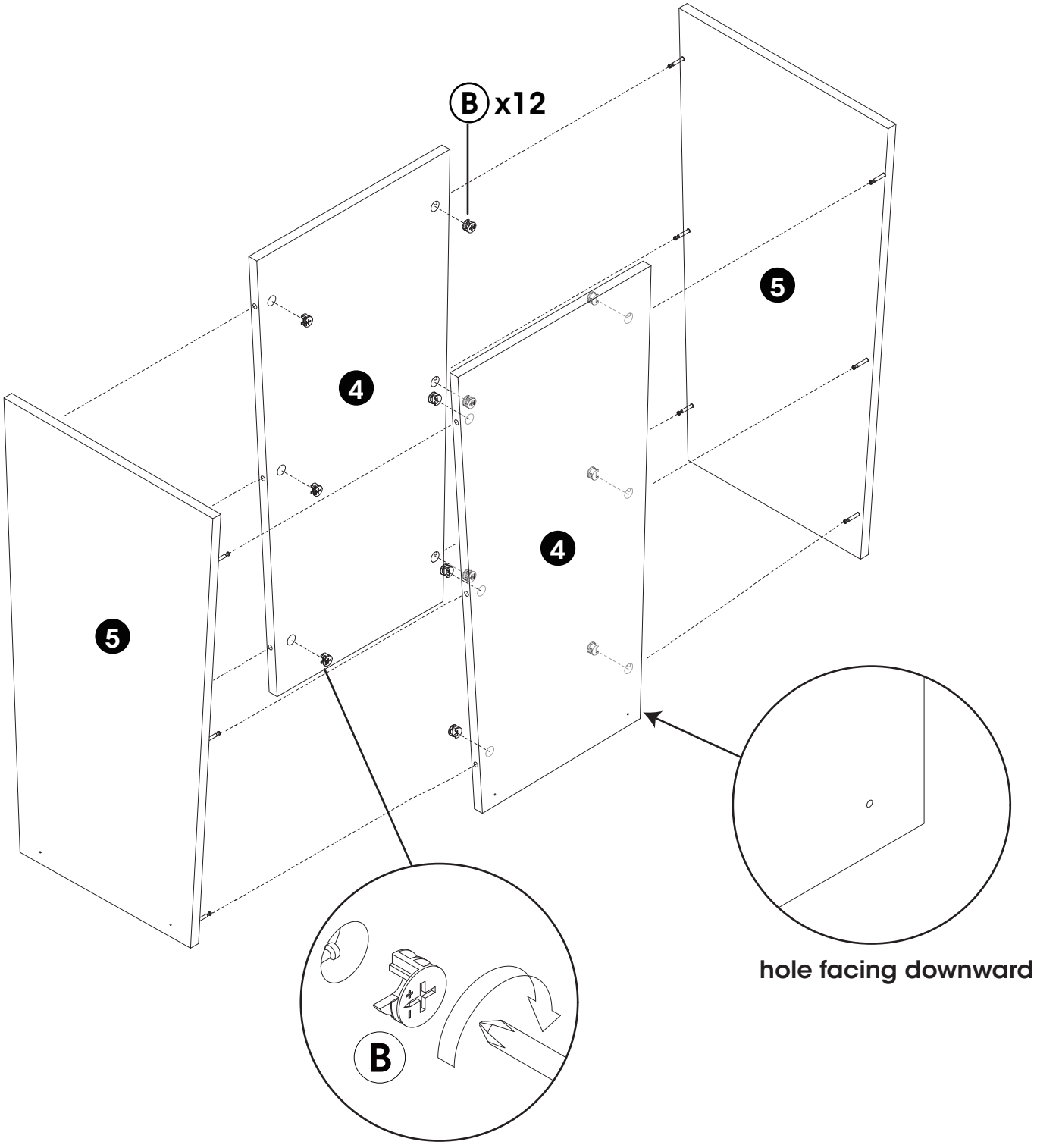

8

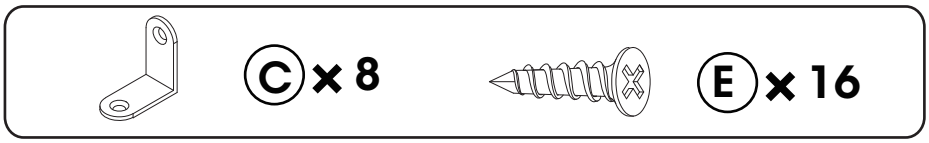

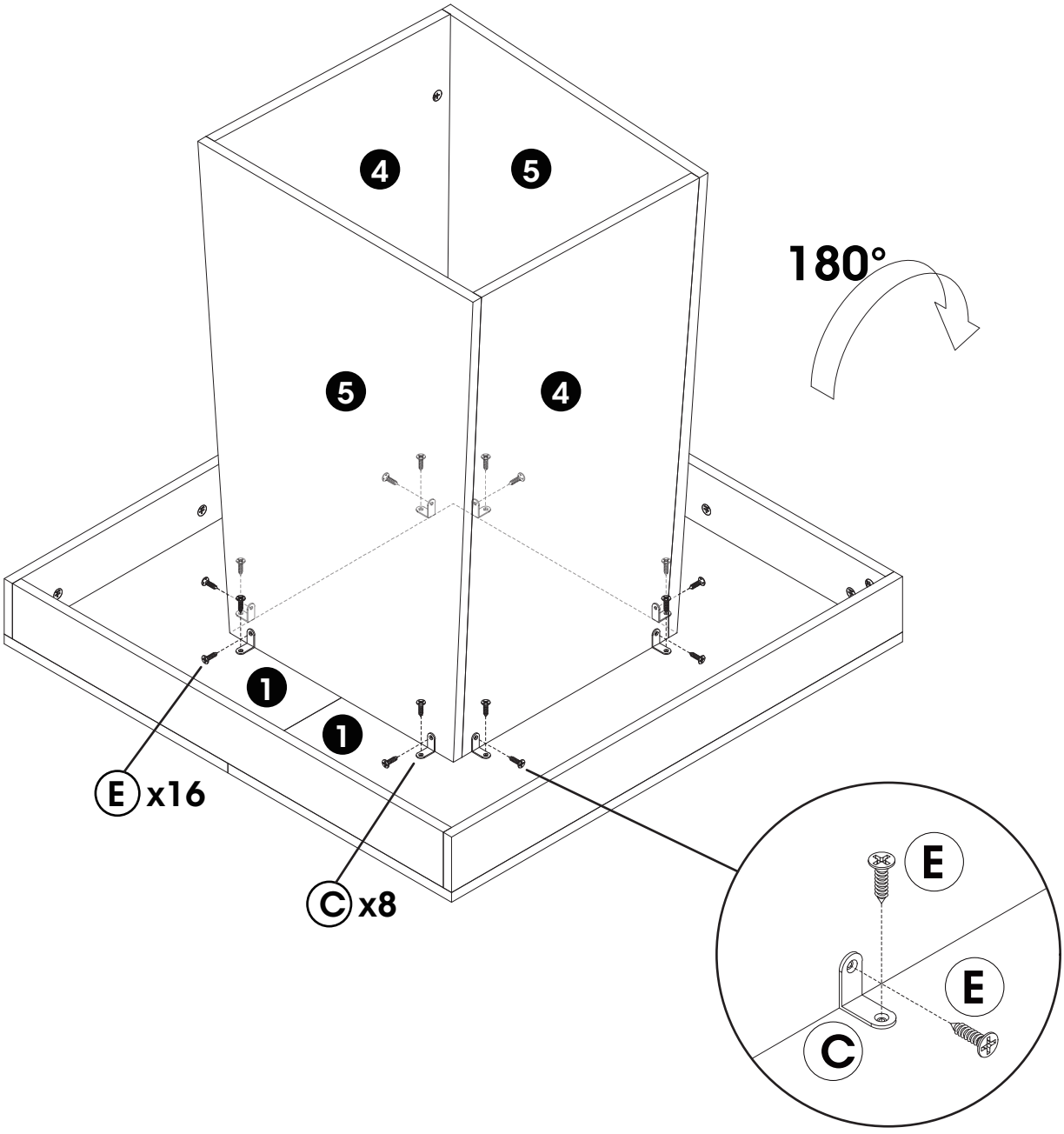

9

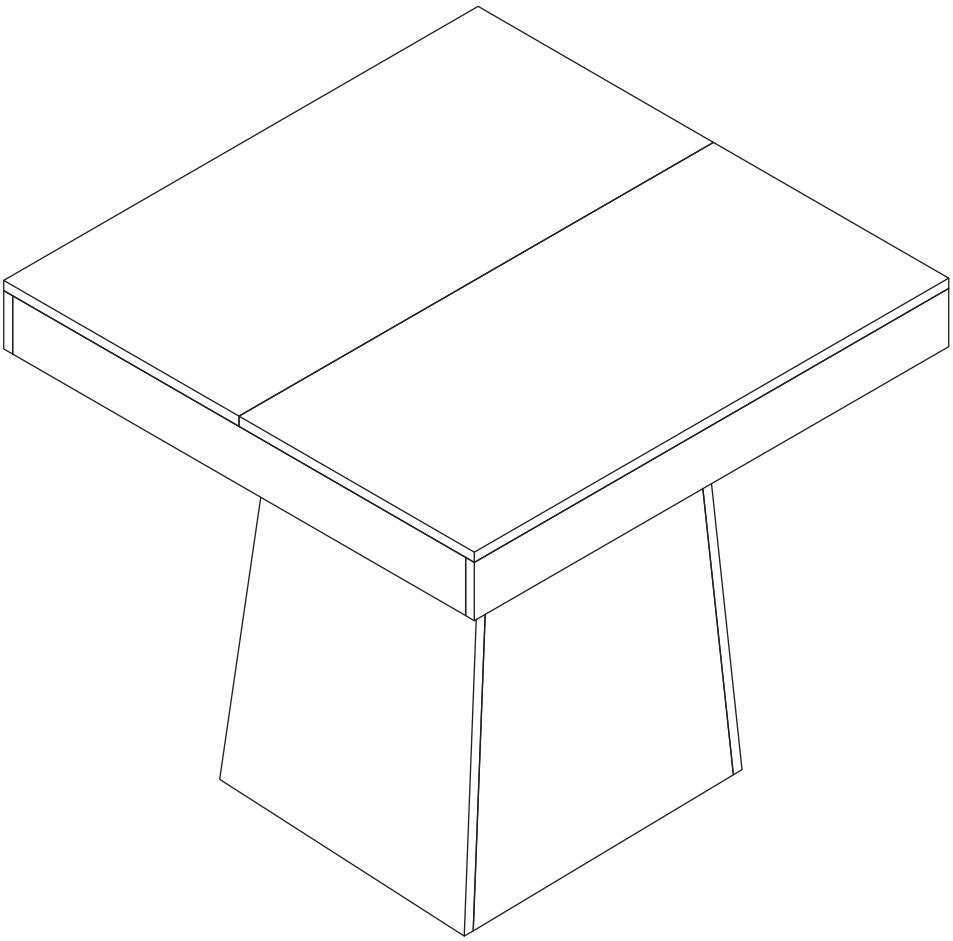

GARVEE

support@garvee.com