SKU:16046 Q

Assemble the bed frame first.

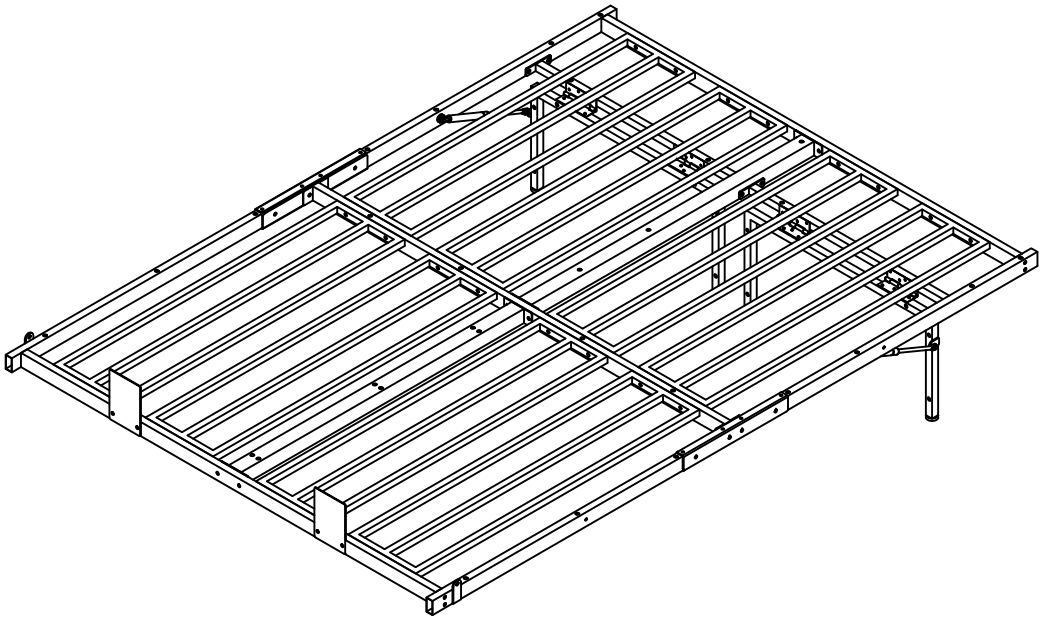

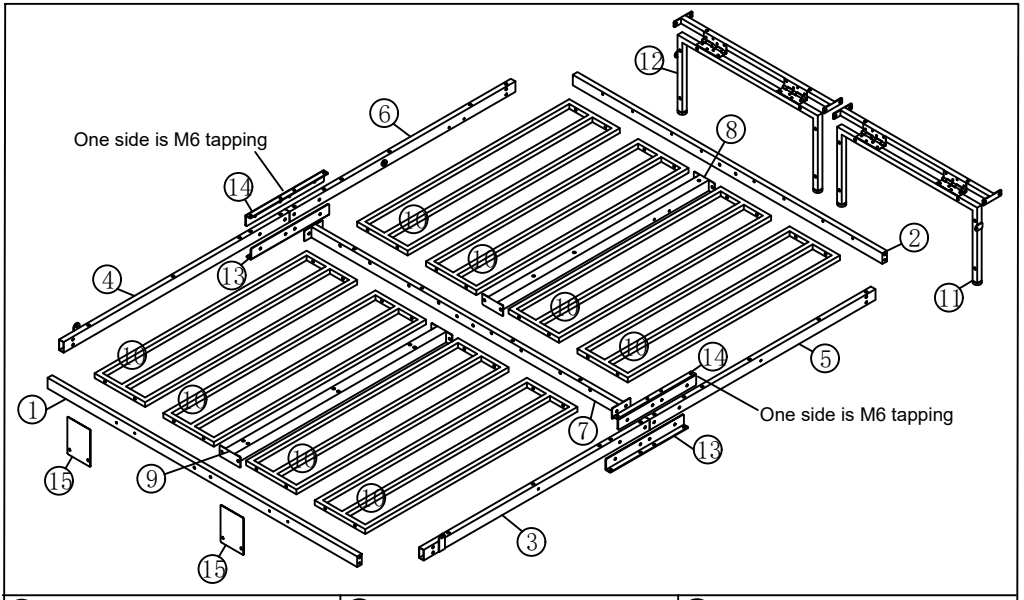

① x1

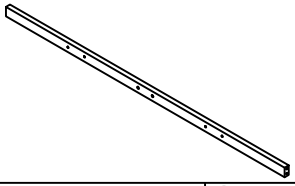

② x1

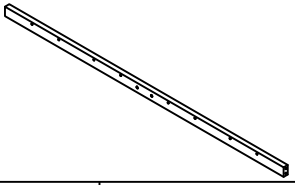

③ x1

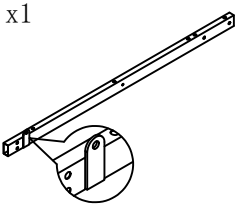

④ x1

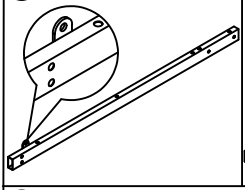

⑤ x1

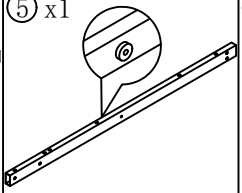

⑥ x1

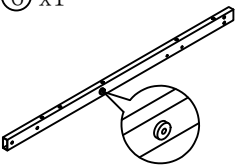

⑦ x1

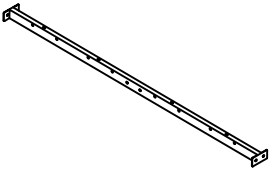

⑧ x1

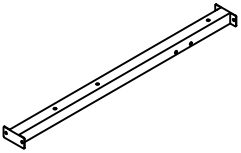

⑨ x1

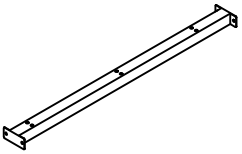

⑩ x8

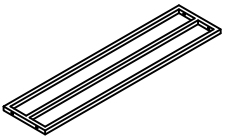

⑪ x1

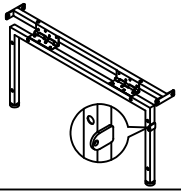

⑫ x1

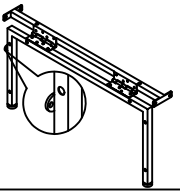

⑬ x2

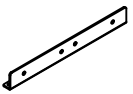

⑭ x2

One side is M6 tapping

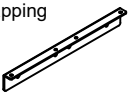

⑮ x2



Assorted Fasteners Pack 2-2

A1	 M6x13	16 Pcs	L1	 M8	1 Pc
B1	 M6x30	16 Pcs	M1	 M12	1 Pc
C1	 M6x35	22 Pcs	N1	 10# 13#	1 Pc
D1	 M6x50	8 Pcs	O1	 17#	1 Pc
E1	 M6x65	8 Pcs	P1		2 Pcs
F1	 M10x25	4 Pcs	Q1	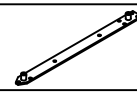	2 Pcs
G1	 ø16xø8x2	4 Pcs	R1		2 Pcs
H1	 M6	8 Pcs	S1	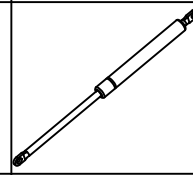	2 Pcs
I1	 M6	24 Pcs			
J1	 M10	2 Pcs	T1		2 Pcs
K1	 M5	1 Pc			
W1	 ø16xø11x3	4 Pcs	T2	 M6x60	2 Pcs

Extra screws

X1	 M6x13	1 Pcs		 M6x65	1 Pcs
	 M6x30	1 Pcs		 M6	1 Pcs
	 M6x35	2 Pcs		 M6	2 Pcs
	 M6x50	1 Pcs			

Step 1

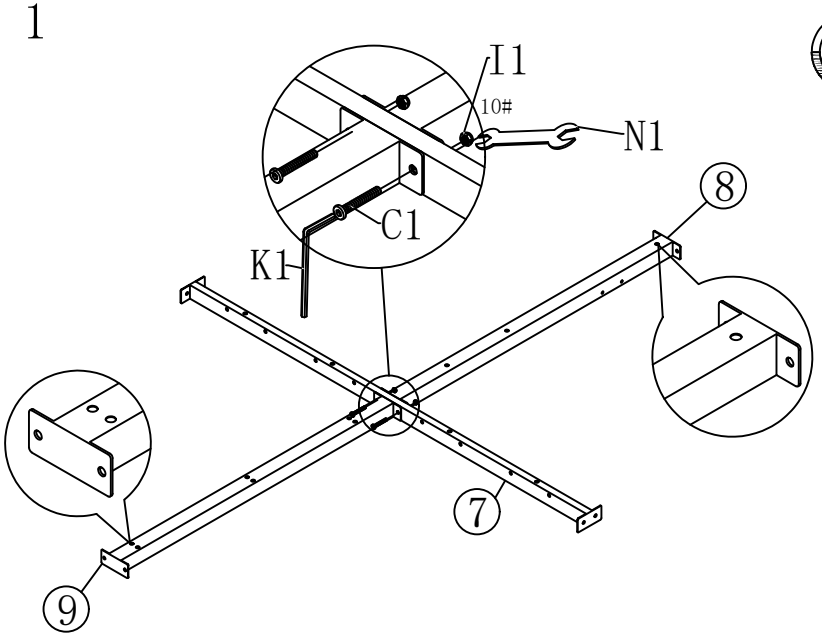

C1x 2PCS	I1x 2PCS	K1x 1PC	N1x 1PC
M6x35	M6	M5	10# 13#

Step 2

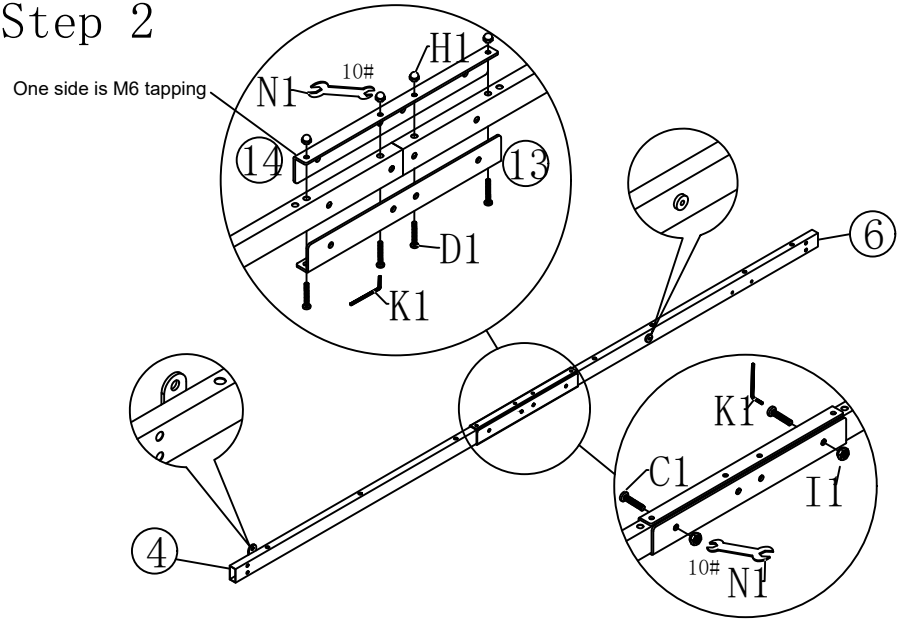

C1x 2PCS	D1x 4PCS	H1x 4PCS	I1x 2PCS	K1x 1PC	N1x 1PC
M6x35	M6x50	M6	M6	M5	10# 13#

Step 3

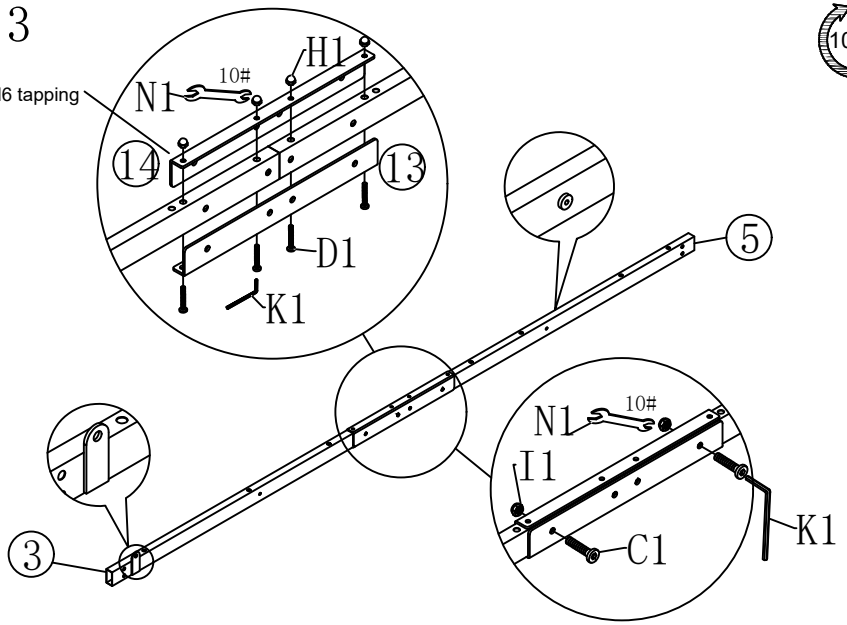

C1x 2PCS	D1x 4PCS	H1x 4PCS	I1x 2PCS	K1x 1PC	N1x 1PC
M6x35	M6x50	M6	M6	M5	10# 13#

Step 4

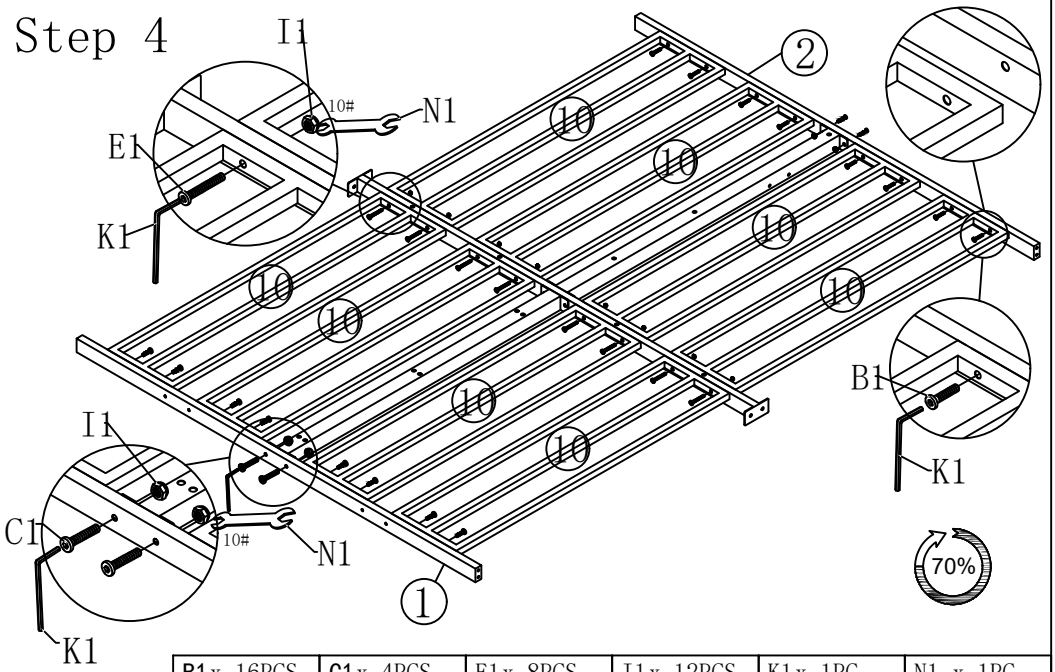

B1x 16PCS	C1x 4PCS	E1x 8PCS	I1x 12PCS	K1x 1PC	N1 x 1PC
M6x30	M6x35	M6x65	M6	M5	10# 13#

Step 5

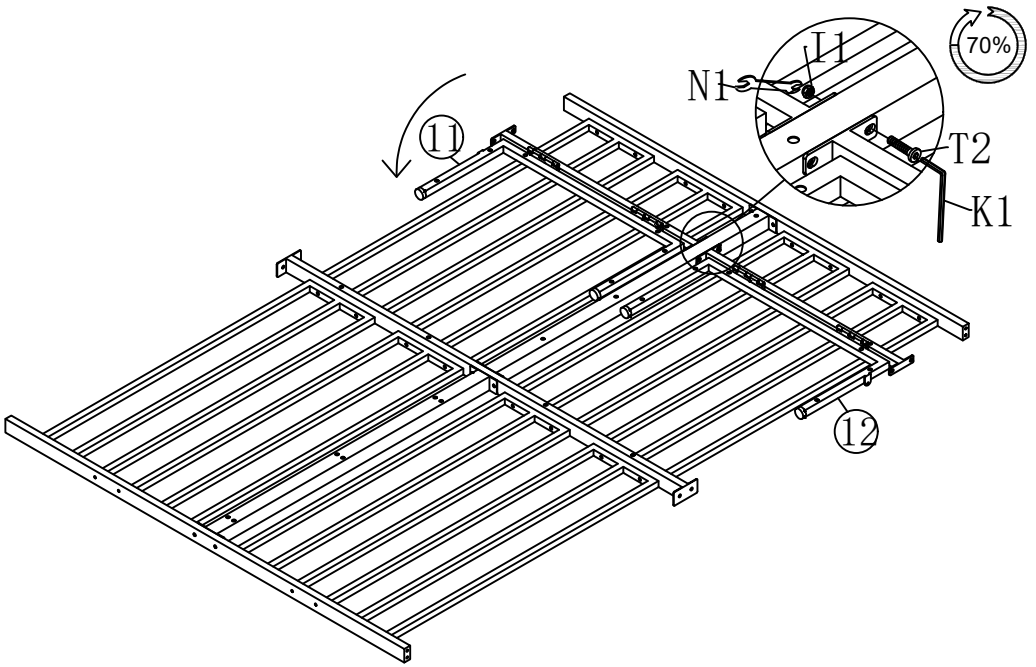

T2 x 1P	I1x 1PC	K1 x 1PC	N1 x 1PC
M6x60	M6	M5	10# 13#

Step 6

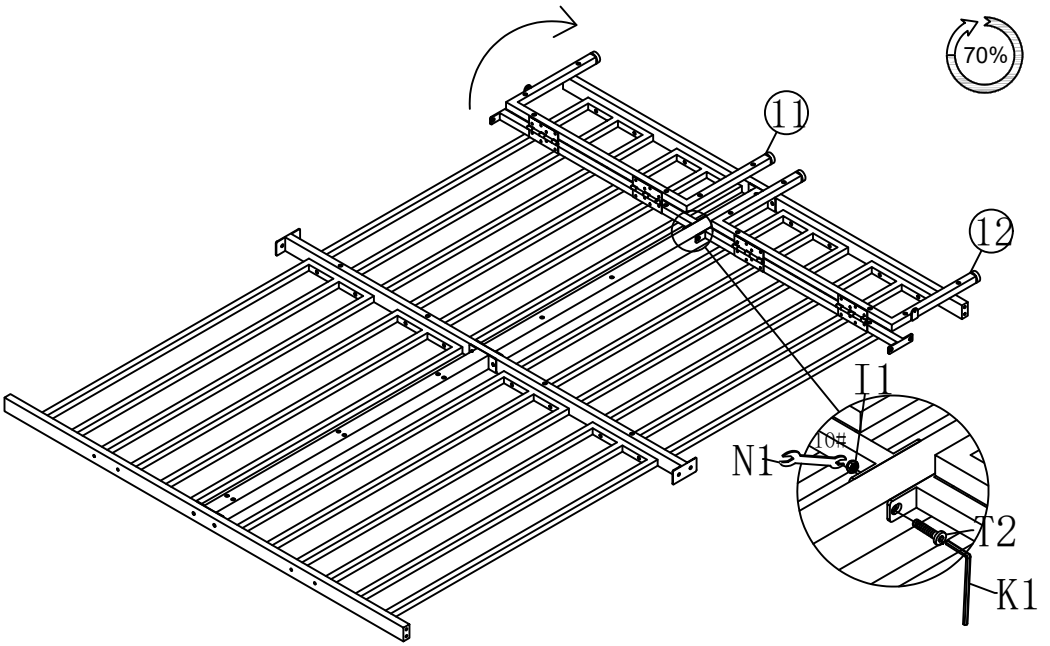

T2 x 1P	I1x 1PC	K1 x 1PC	N1 x 1PC
M6x60	M6	M5	10# 13#

Step 7

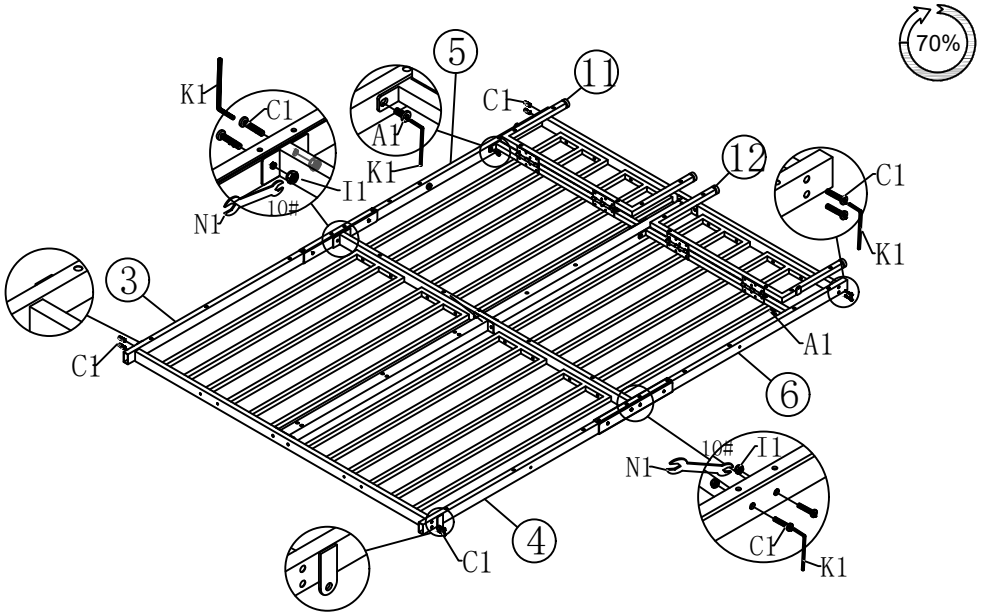

A1x 2PCS	C1 x 12PCS	I1 x 4PCS	K1 x 1PC	N1 x 1PC
M6x13	M6x35	M6	M5	10# 13#

Step 8

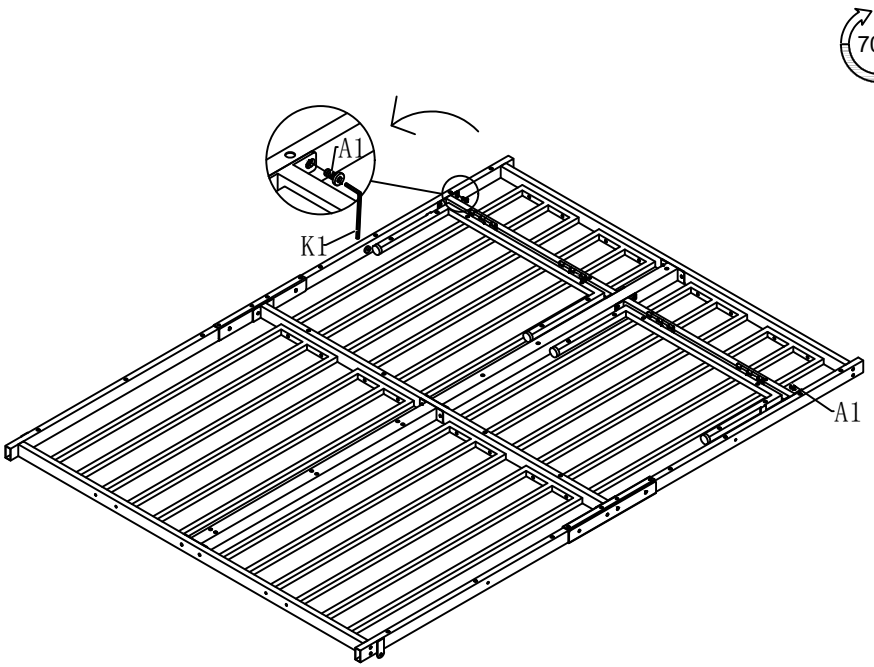

A1 x 2PCS	K1 x 1PC
M6x13	M5

Step 9

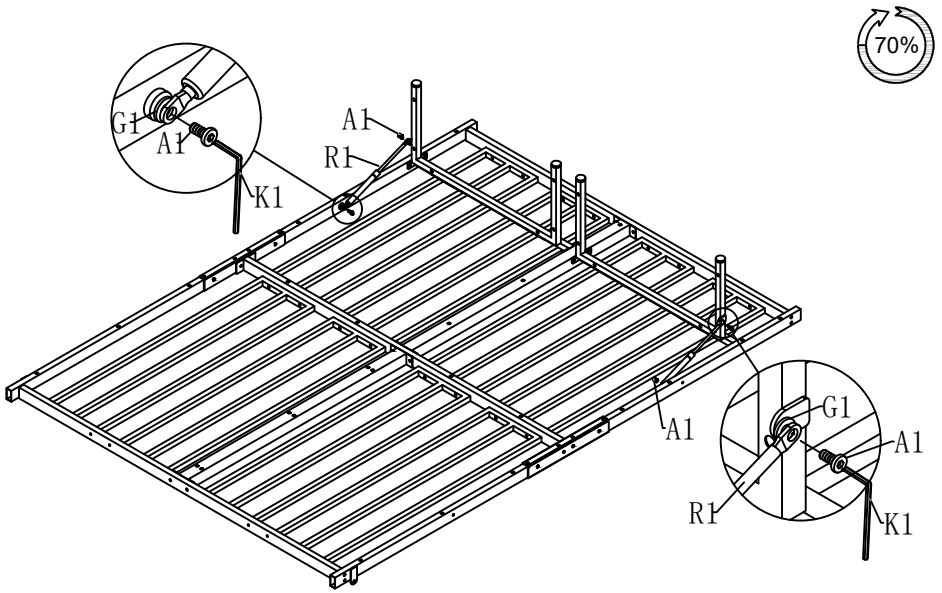

A1x 4PCS	K1 x 1PC	G1 x 4PCS	R1 x 2PCS
M6x13	M5	φ16xφ8x2	

Step 10

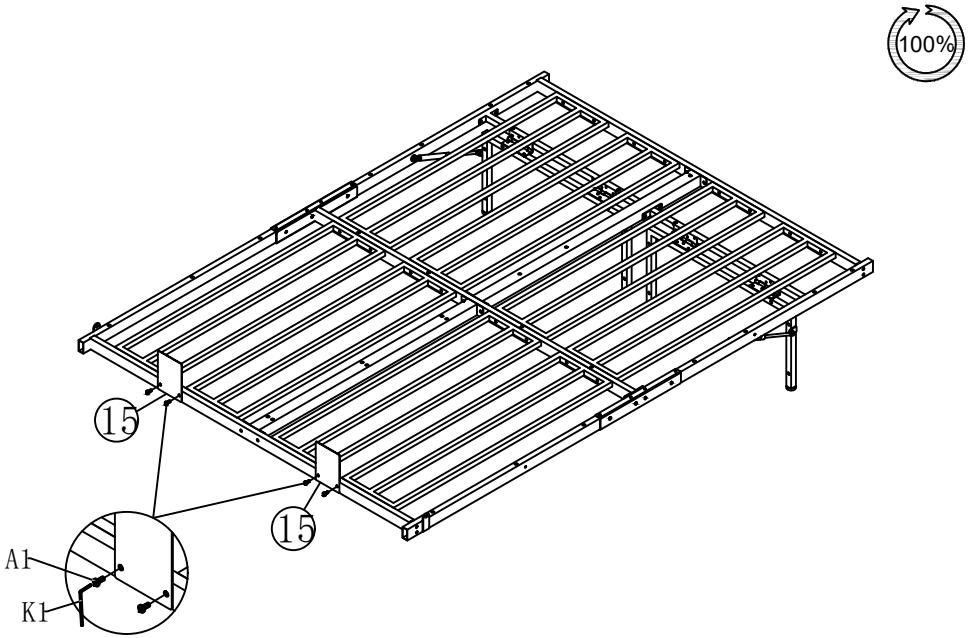

A1x 4PCS	K1x 1PC
M6x13	M5

INSTALLATION GUIDE



Suggest using electric tools for installation

SKU:16046 Q

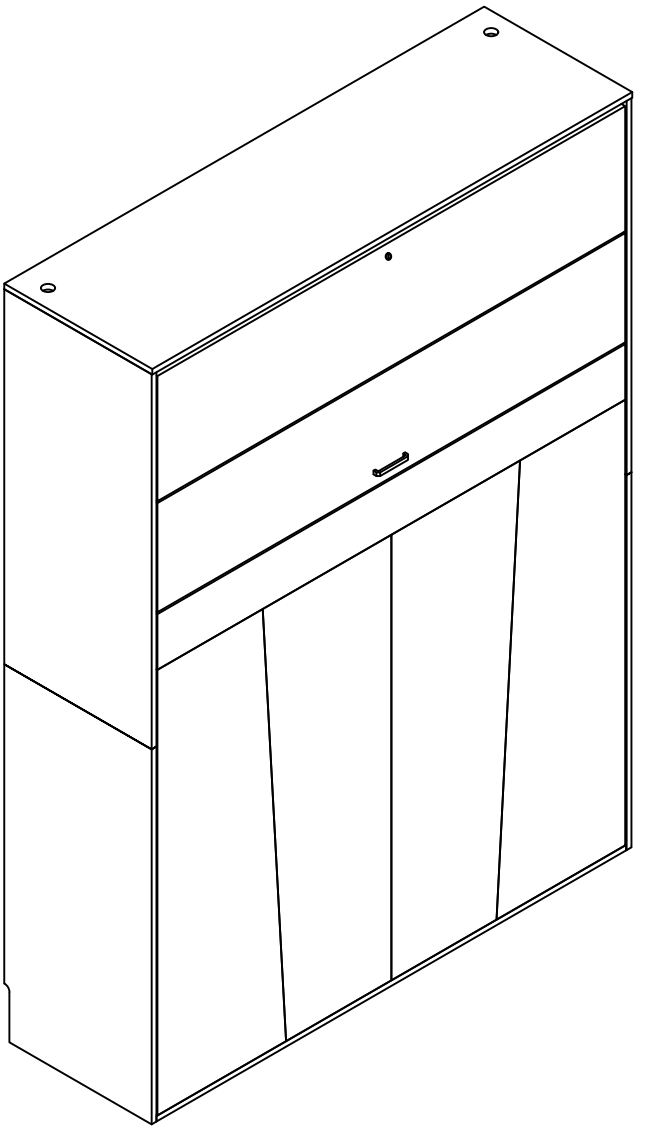

SKU:16046Q

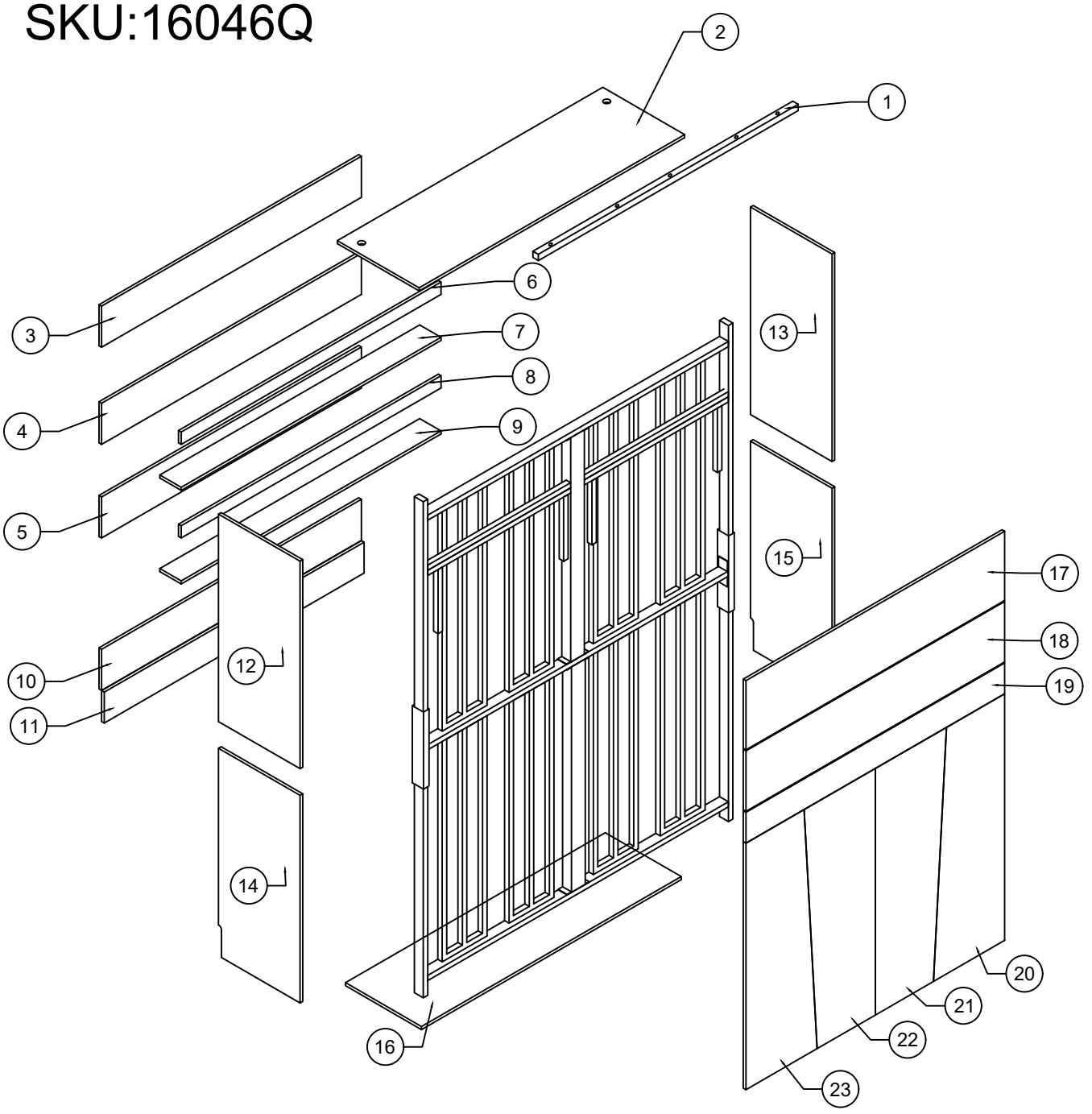

2/17

Assorted Fasteners Pack 2-1

A	 M6*41	53 PCS	M		1 PCS
B	 M15	53 PCS	N		4 PCS
C	 80*80	4 PCS	O	M6*30  0-1 M3.5*30  0-2	16 PCS
D	 M8*40	13 PCS	P	M8*60  P-1 M6*15  P-2 M5*60  P-3	4 PCS
G	 M5	1 PCS	S	 M6*13	21 PCS
H	 60*60*25	4 PCS	T	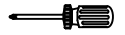 T00L	1 PCS
I	 M128	1 PCS	U	 M7*38	6 PCS
J	 M4*20	2 PCS	X	 M3.5*14	100 PCS
F	 40*40*25	6 PCS	R	 M6*16	19 PCS
Z	 M6*50	32 PCS	W	 M4*18	4 PCS
V	 M6*30	22 PCS	L	 M6*18*1.5	54 PCS
E		1 PCS	K	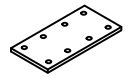	6 PCS

Assorted Fasteners Pack 2-2

T1	T-1 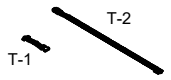 T-2	2 PCS	J1	 M10	2 PCS
F1	 M10*25	4 PCS	P1		2 PCS
W1	 ø16xø11x3	4 PCS	Q1		2 PCS
S1	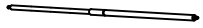	2 PCS			

SKU:16046 Q

A		36 PCS	D	M8*40	8 PCS

STEP 1

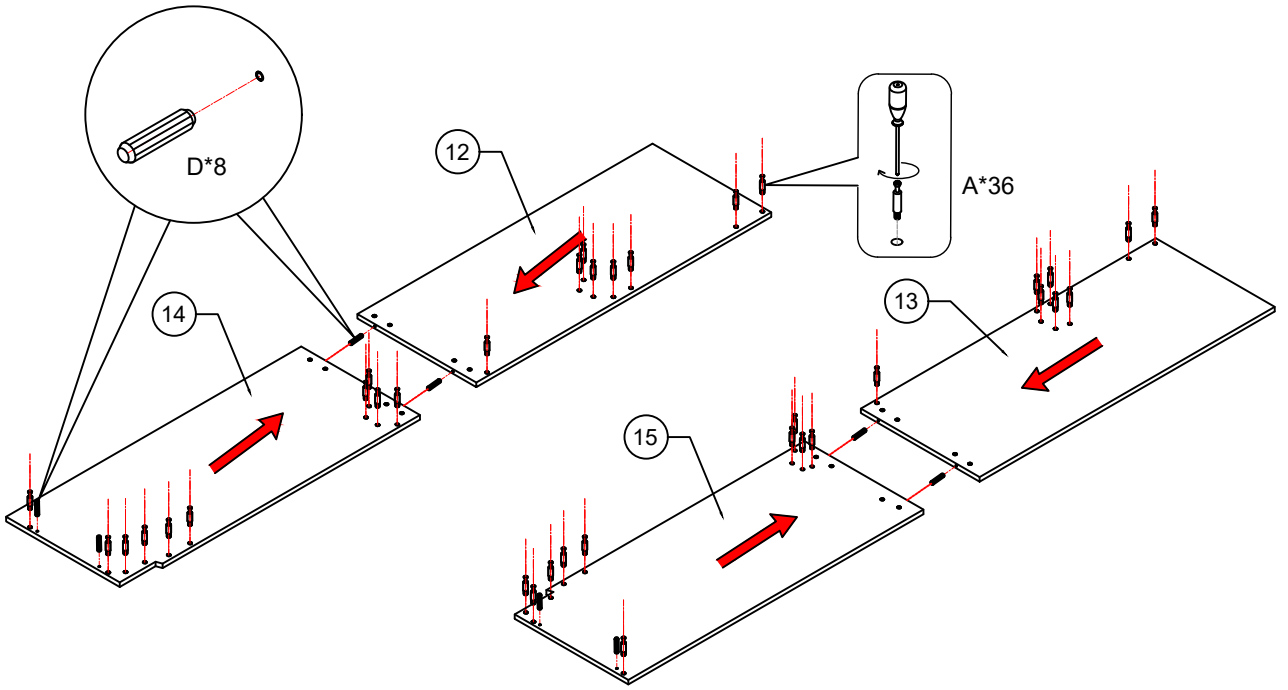

S	M6*13	16 PCS	C	80*80	4 PCS

STEP 2

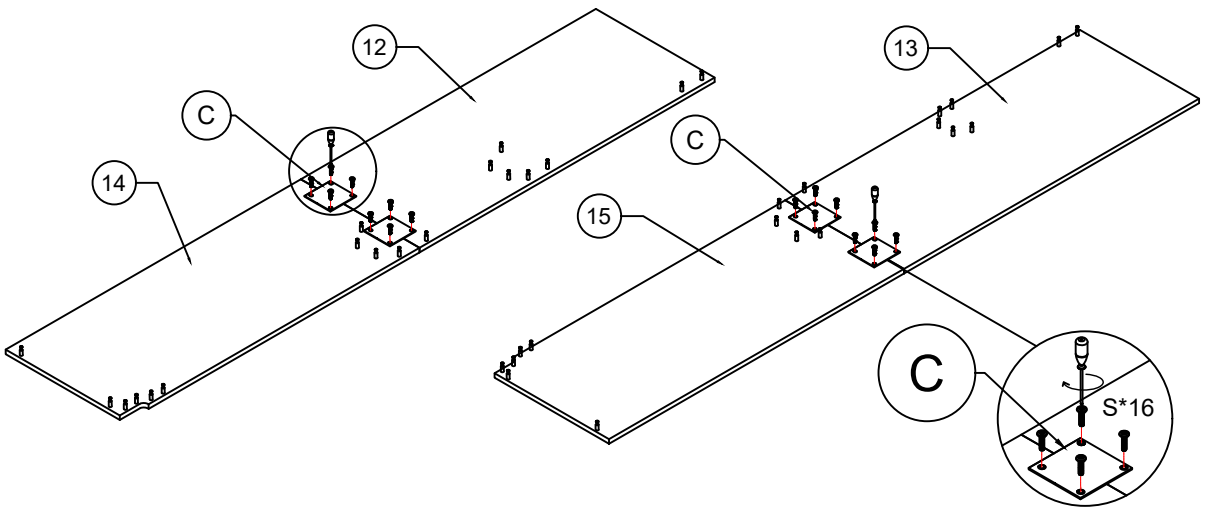

A		10 PCS	D	M8*40	4 PCS

STEP 3

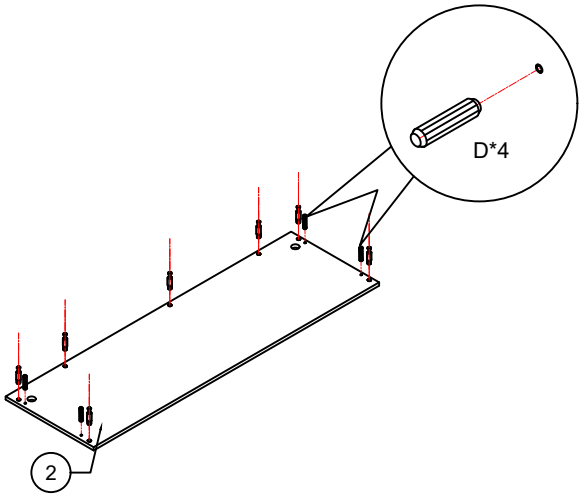

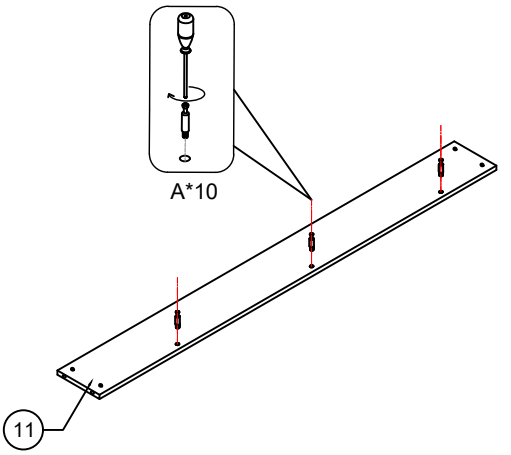

B	M15	6 PCS

STEP 4

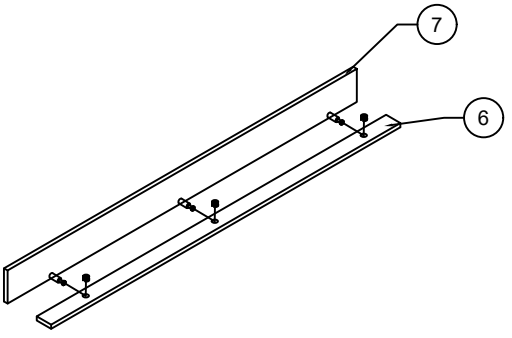

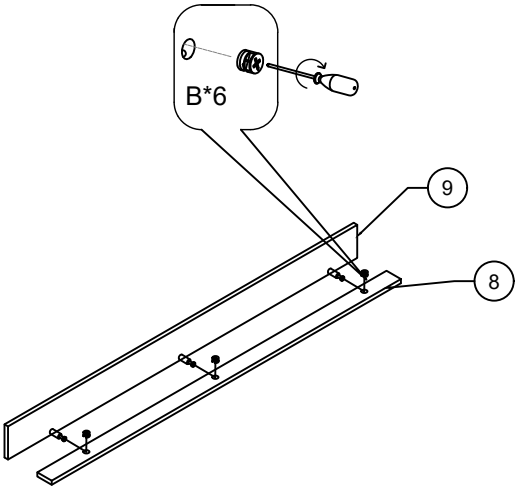

U	 M7*38	6 PCS

STEP 5

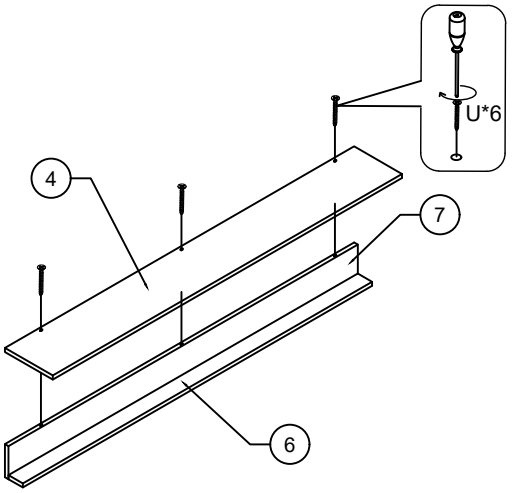

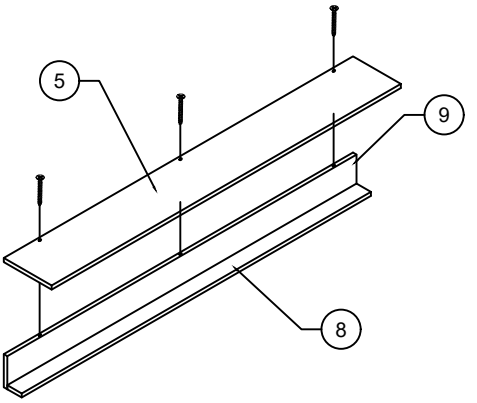

B	 M15	3 PCS

STEP 6

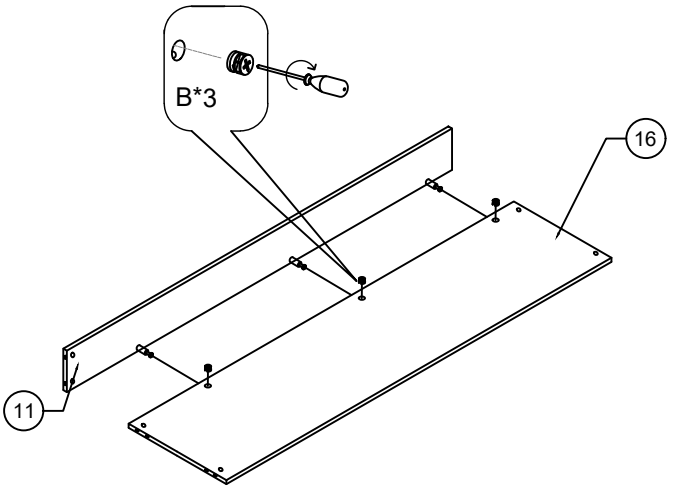

B	M15	18 PCS

STEP 7

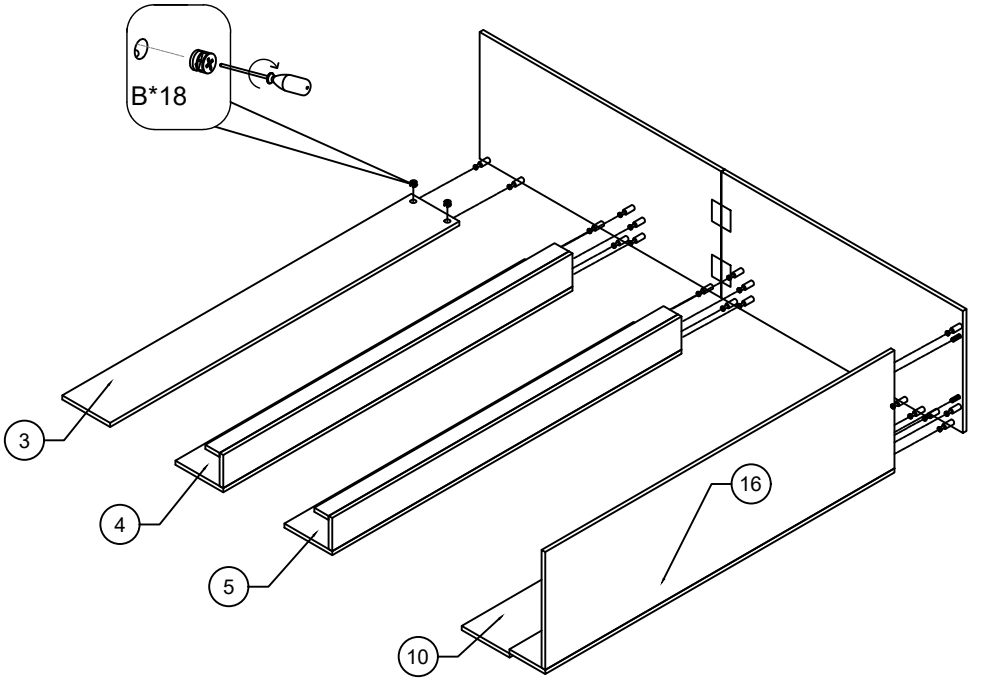

B	M15	18 PCS

STEP 8

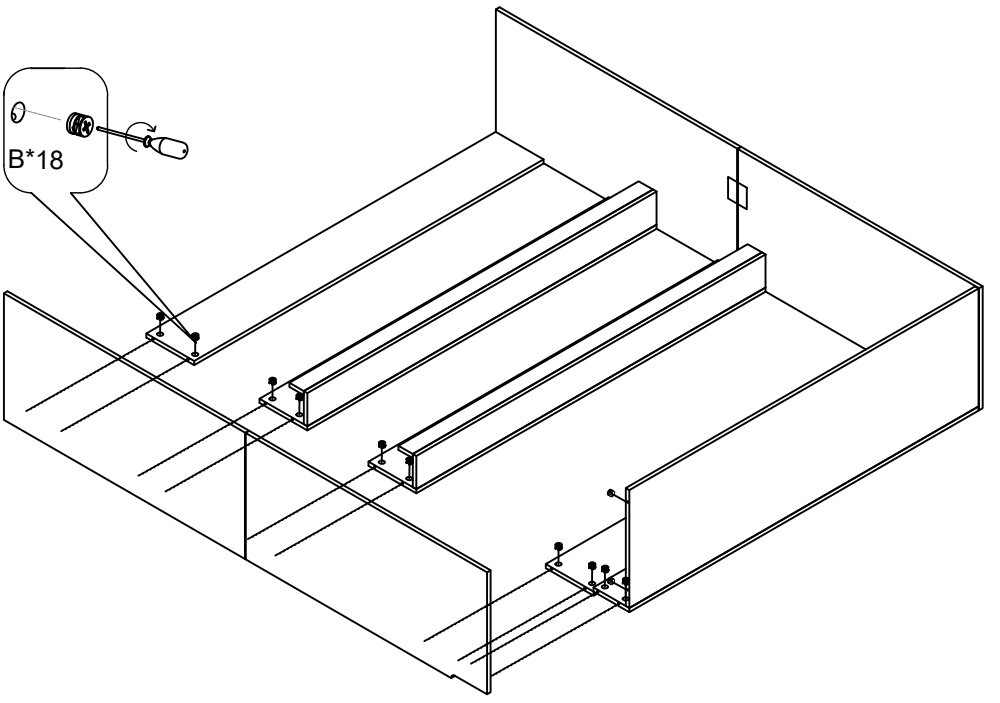

B	 M15	7 PCS	V	 M6*30	5 PCS
L	 M6*18*1.5	5 PCS			

STEP 9

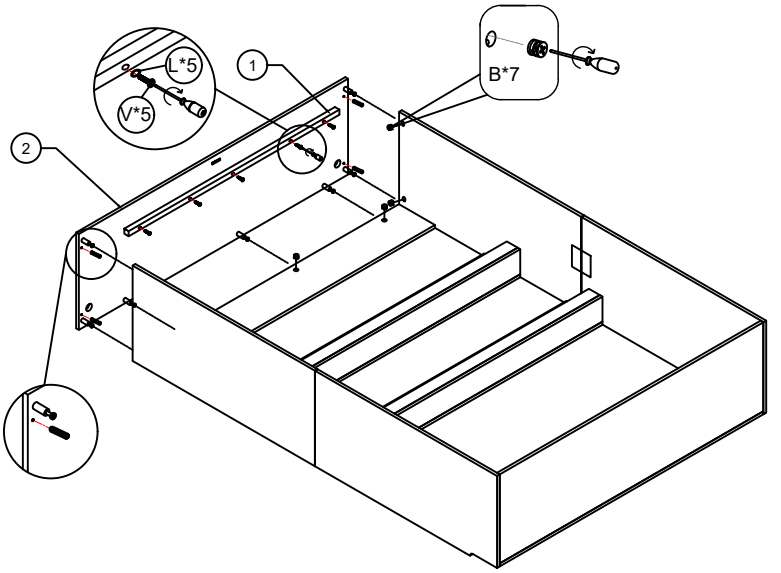

M		1 PCS	F	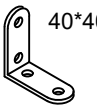 40*40*25	4 PCS
X	 M3.5*14	16 PCS			

STEP 10

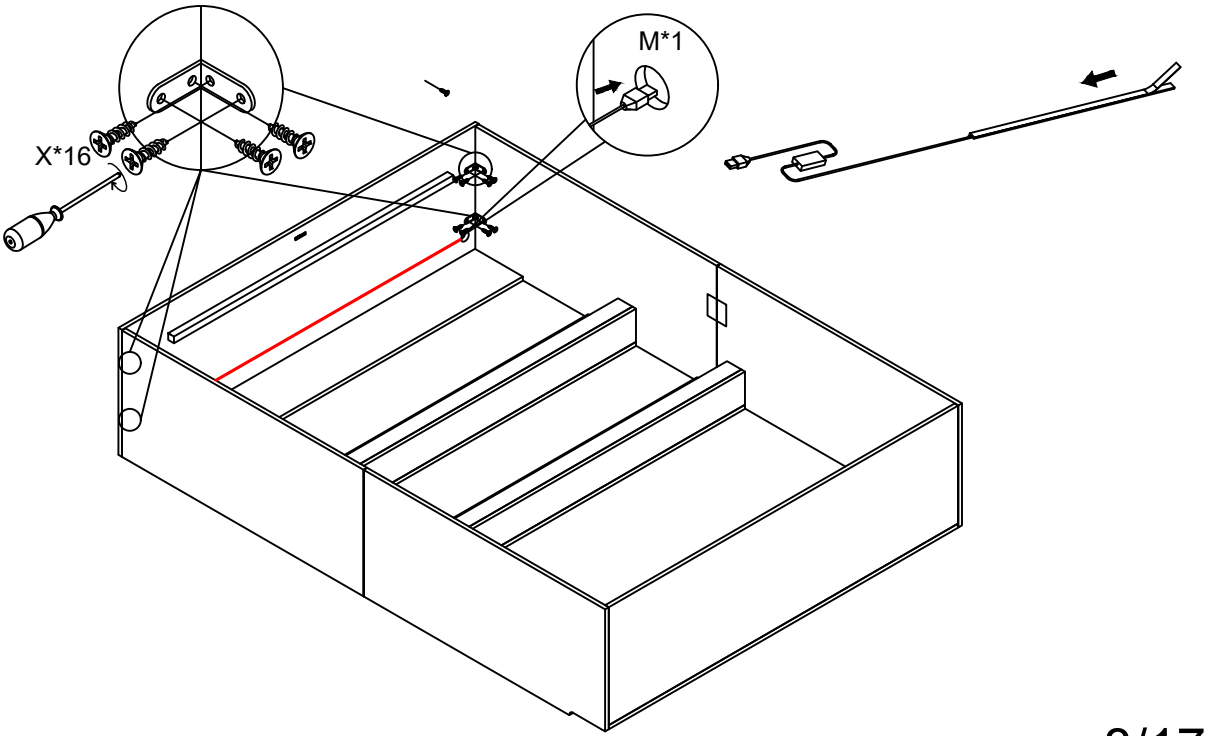

N		3 PCS	X	 M3.5*14	6 PCS

STEP 11

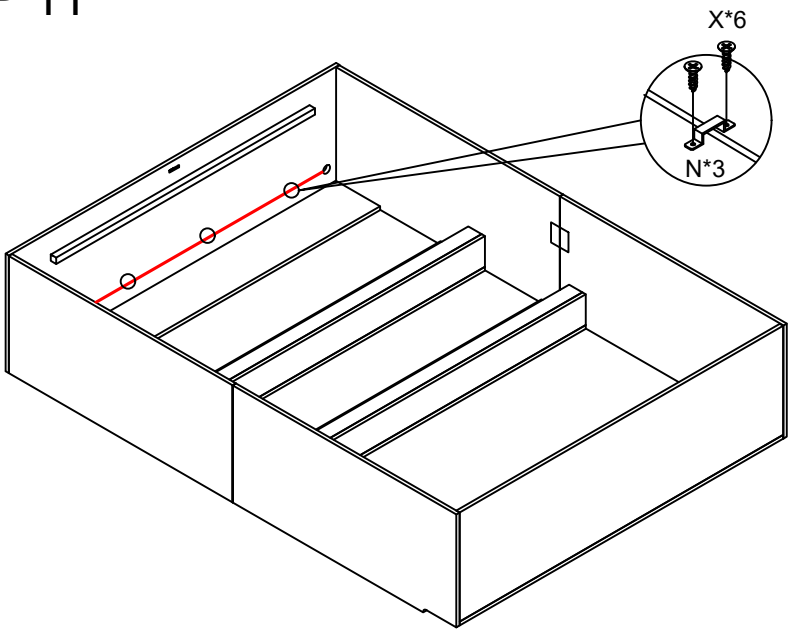

Q1		2 PCS	R	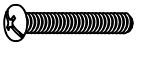 M6*16	18 PCS
F	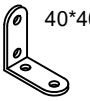 40*40*25	2 PCS	X	 M3.5*14	8 PCS

STEP 12

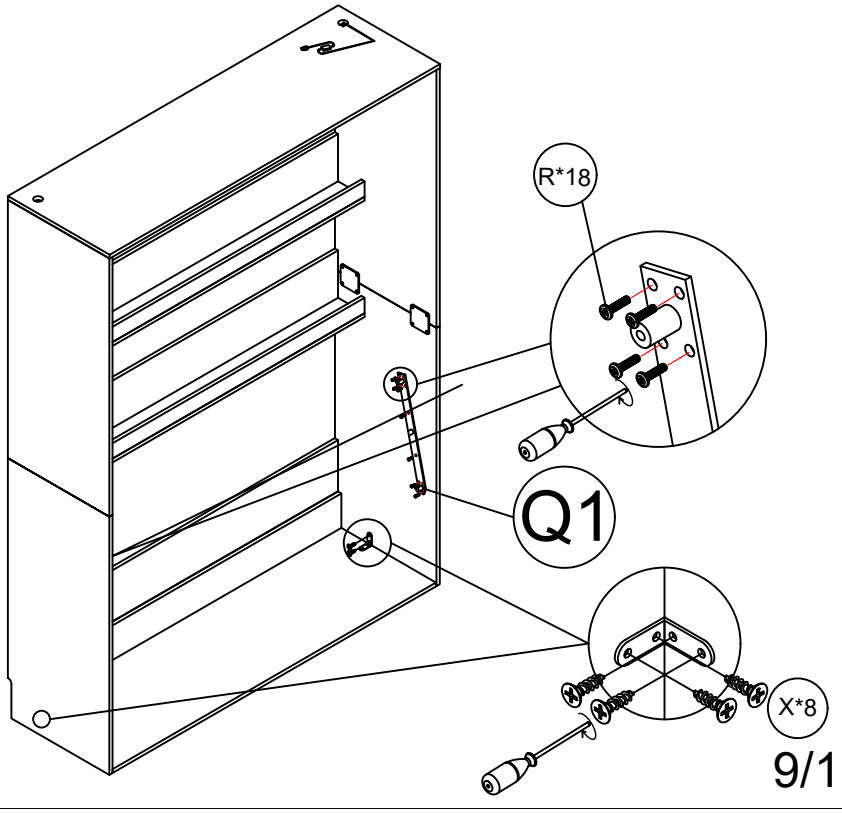

K		6 PCS	X	M3.5*14	48 PCS

STEP 13

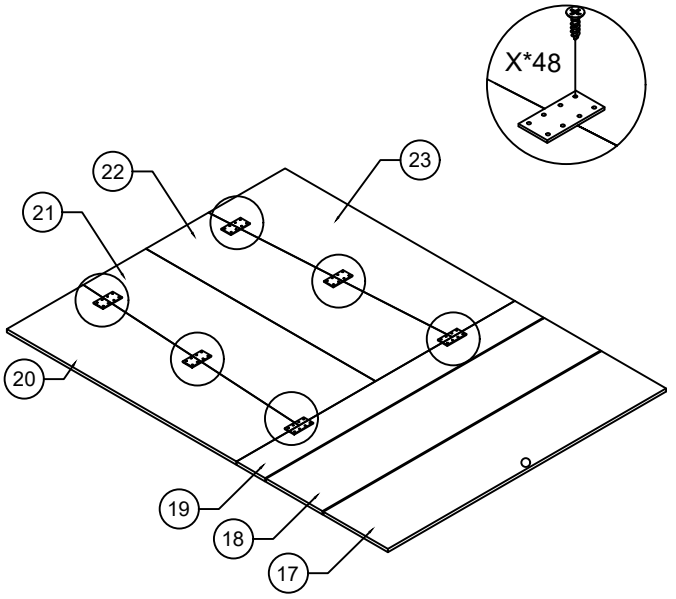

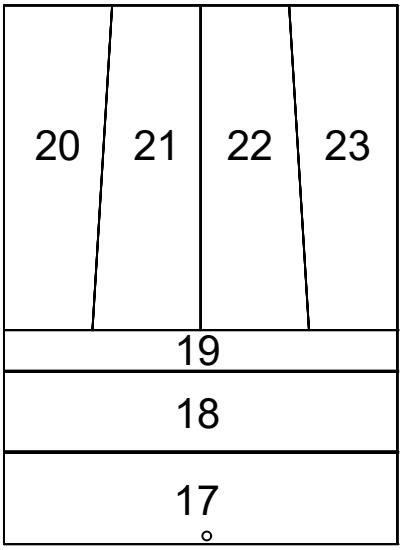

V	M6*30	17 PCS	L	M6*18*1.5	17 PCS

STEP 14

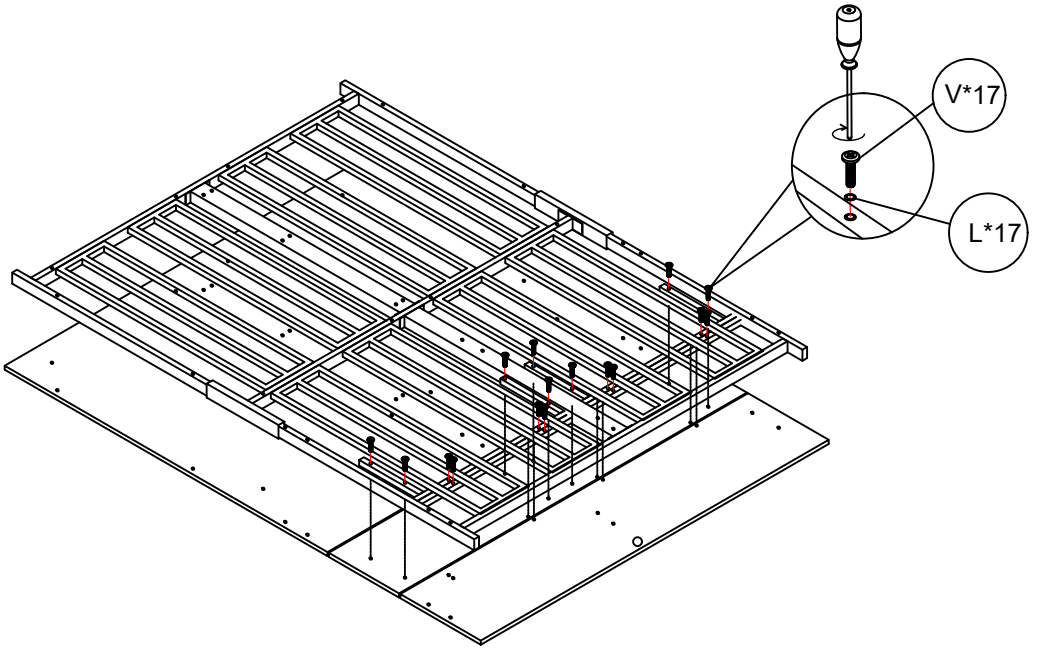

Z	 M6*50	32 PCS	L	 M6*18*1.5	30 PCS

STEP 15

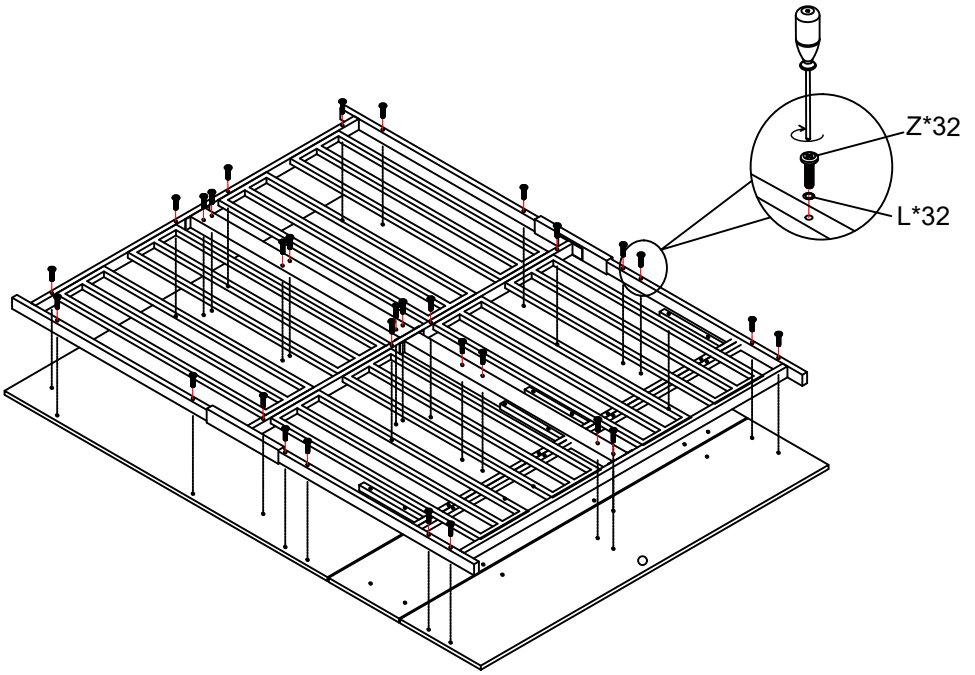

W	 M4*18	4 PCS	E		1 PCS

STEP 16

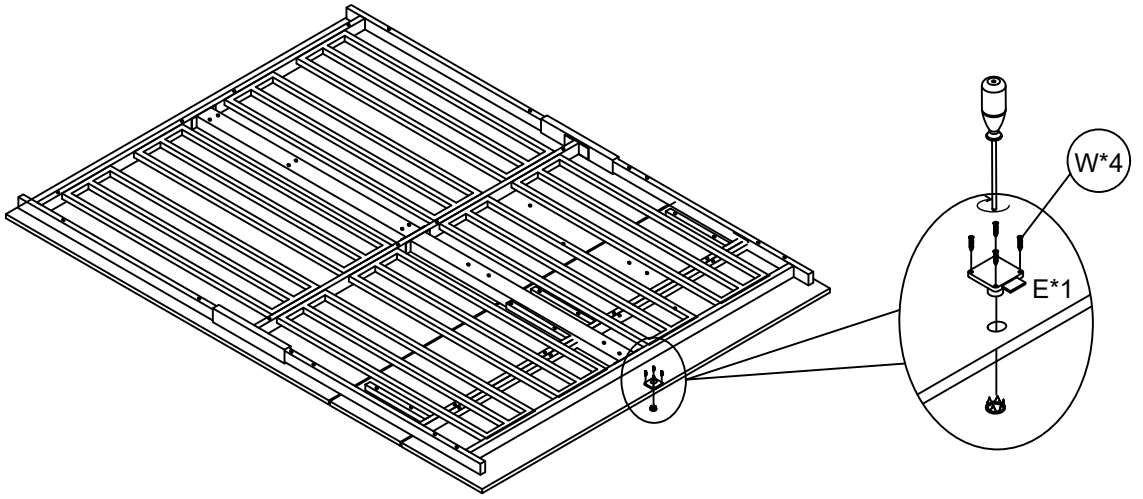

P1		2 PCS	M1	M12	1 PCS

STEP 17

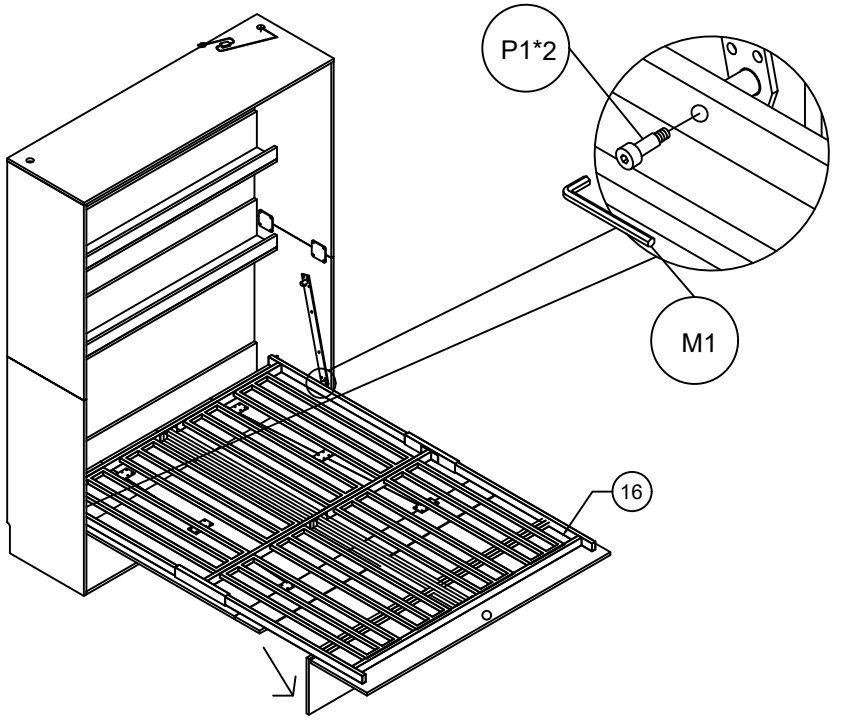

STEP 18

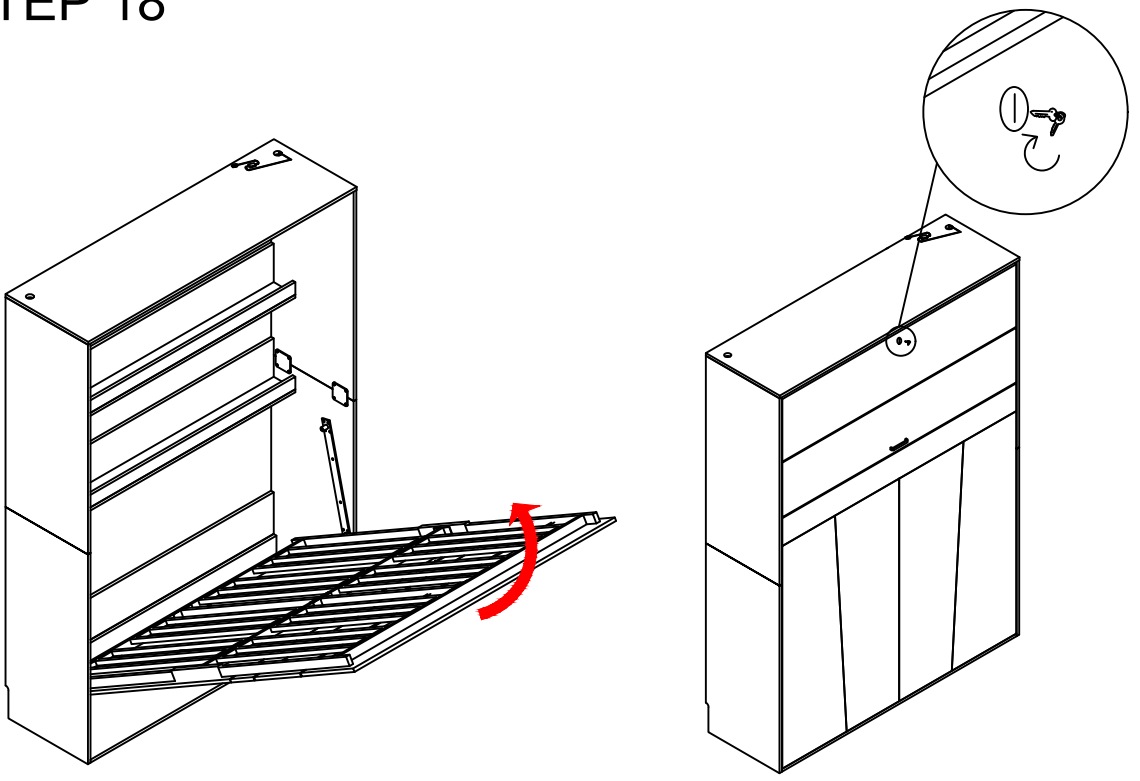

F1	 M10*25	2 PCS	J1	 M10	2 PCS
W1	 ø16xø11x3	2 PCS	O1	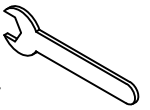 #17	1 PCS
L1	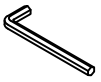 M8	2 PCS	S1		2 PCS

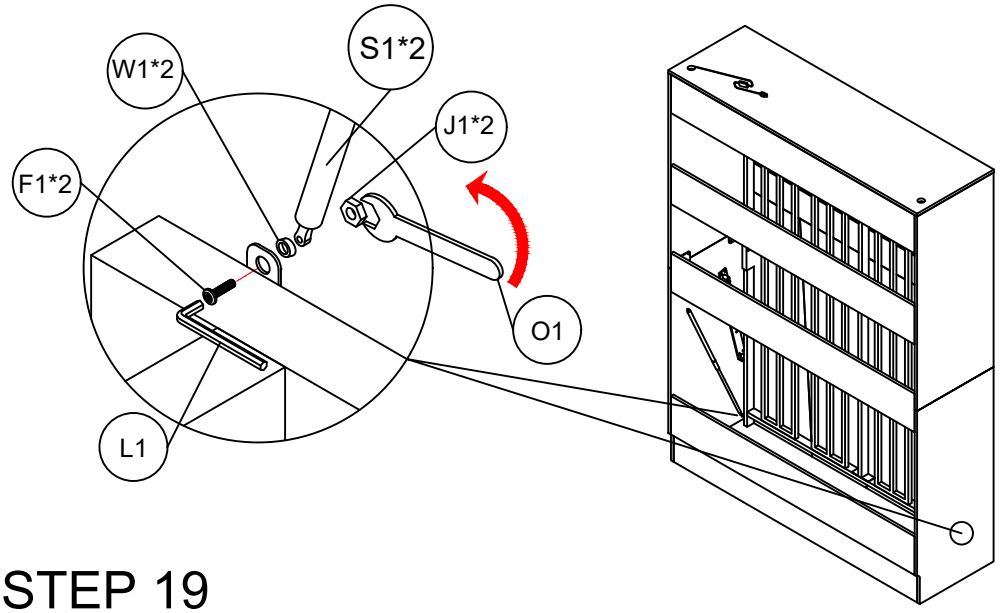

STEP 19

F1	 M10*25	2 PCS	L1	 M8	1 PCS
W1	 ø16xø11x3	2 PCS			

STEP 20

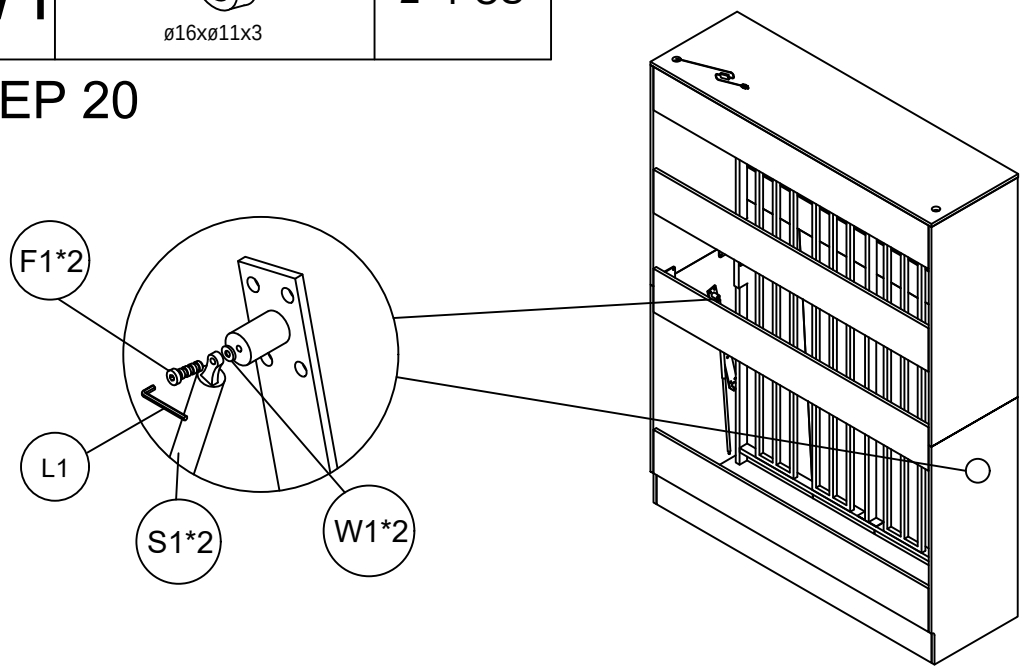

H	 60*60*25	2 PCS	O	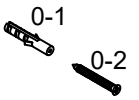 Φ6*30MM	4 PCS
X	 M3.5*14	4 PCS			

STEP 21

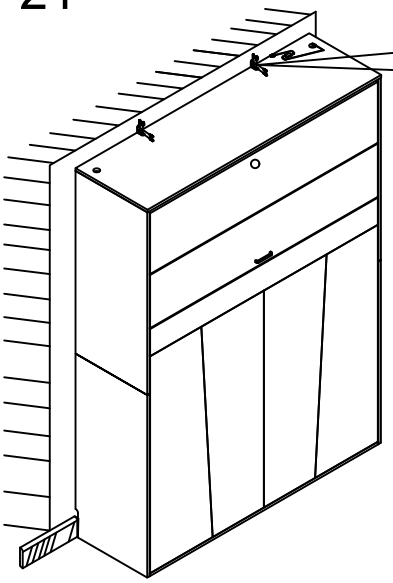

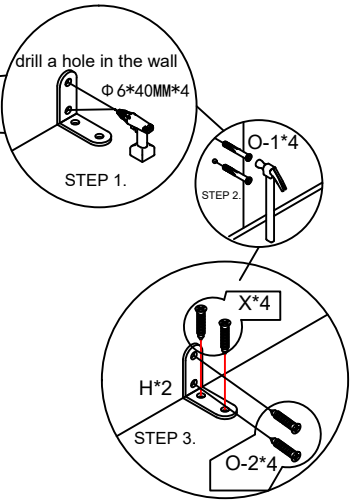

Please accurately measure the size to ensure that the diagonals are equal, and then fix it.

J	 M4*20	2 PCS	I	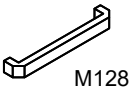 M128	1 PCS

STEP 22

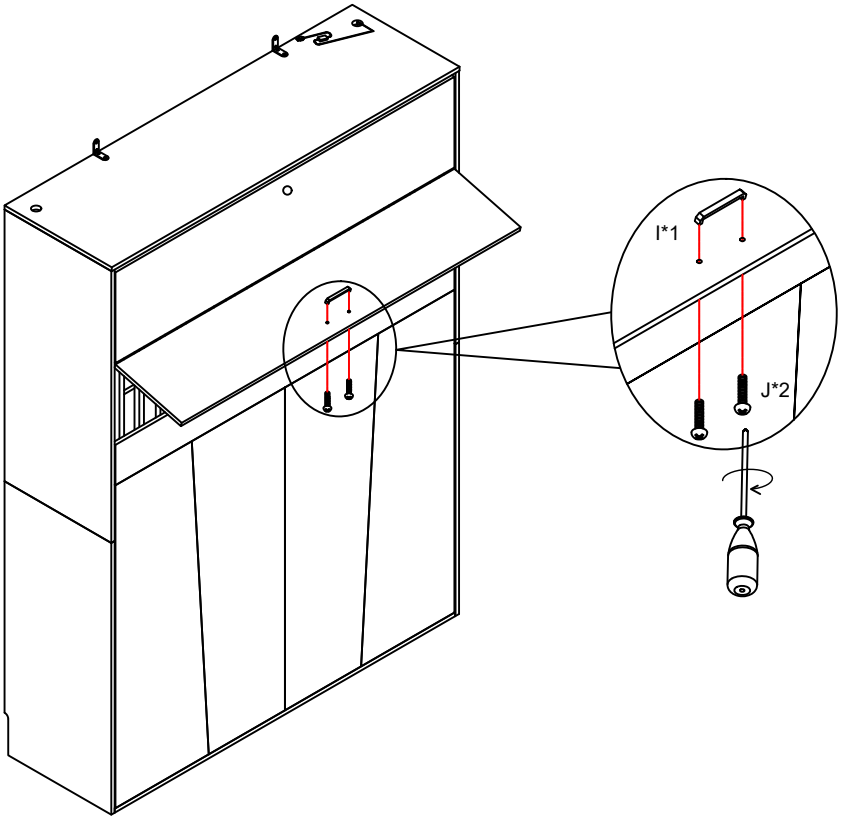

STEP 23

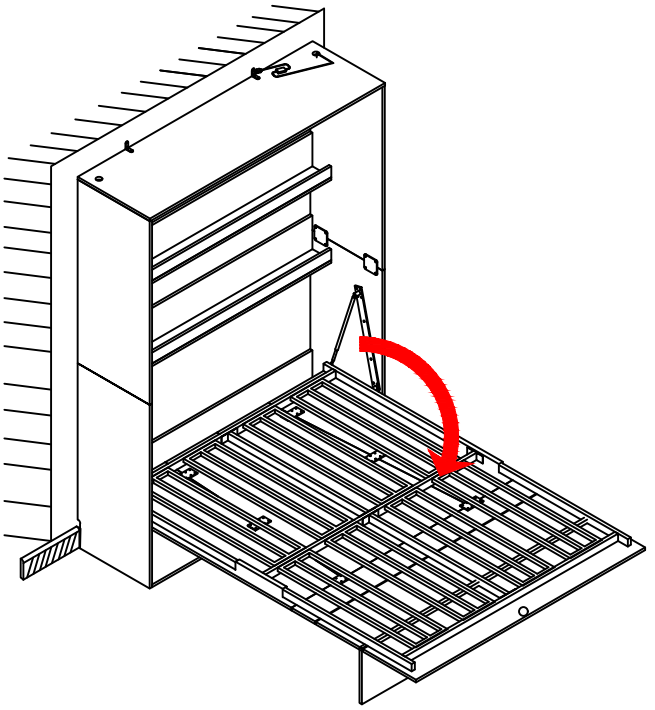

STEP 24

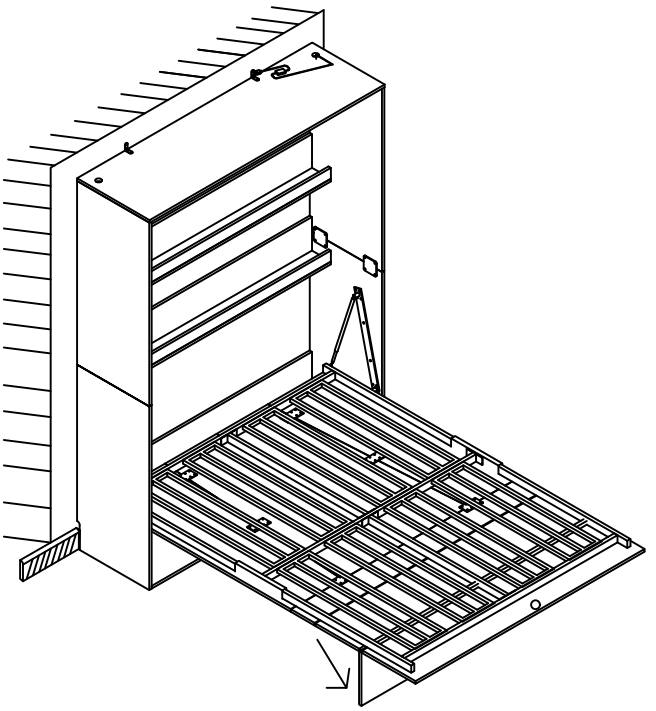

P	M8*60 P-1, M6*15 P-2, M5*60 P-3	4 PCS

STEP 25

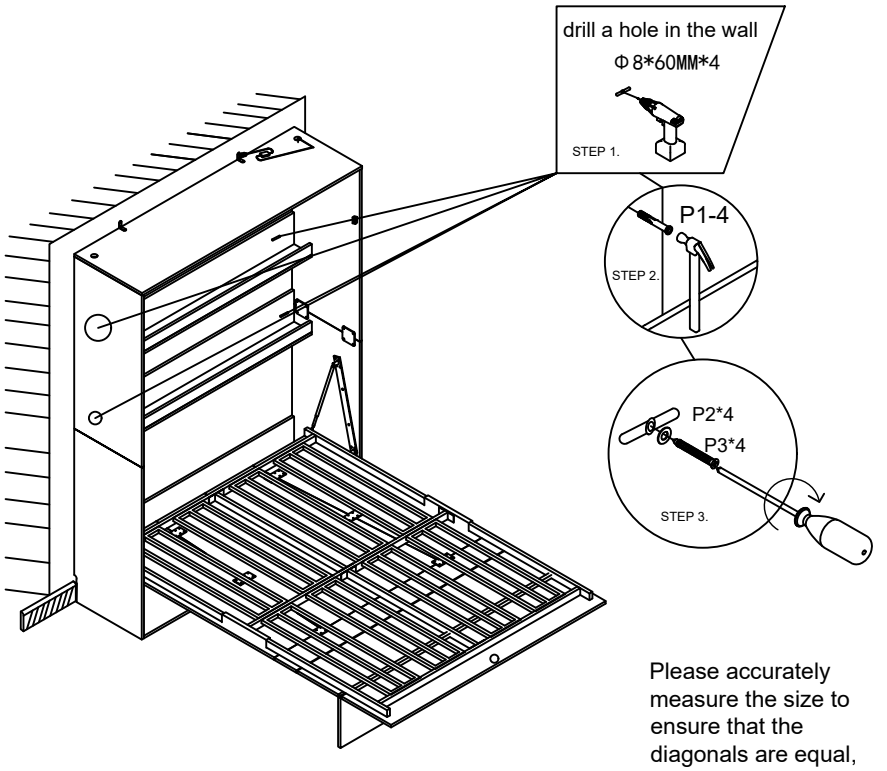

Please accurately measure the size to ensure that the diagonals are equal, and then fix it.

H	60*60*25	2 PCS	O	0-1 Φ6*30MM, 0-2 M3.5*30	4 PCS
X	M3.5*14	4 PCS			

STEP 26

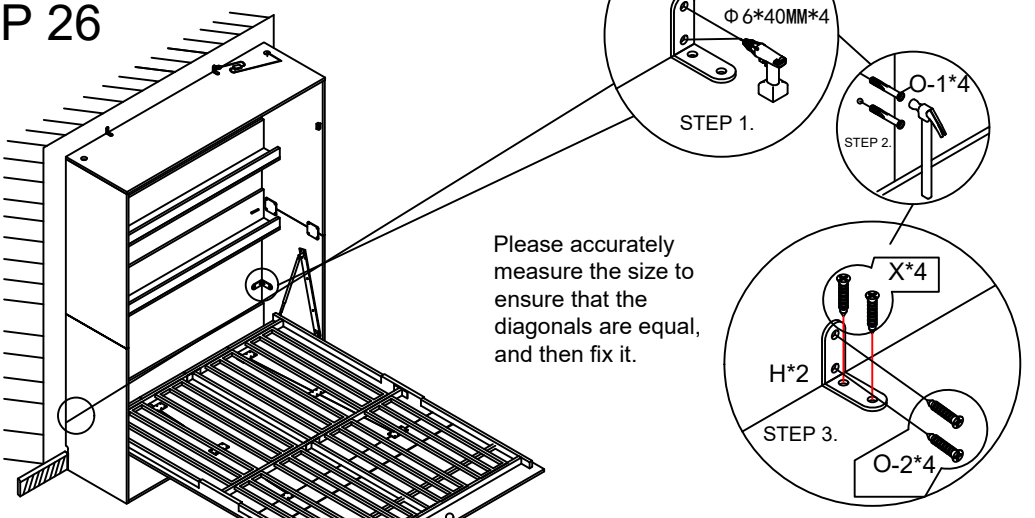

Please accurately measure the size to ensure that the diagonals are equal, and then fix it.

T1	T-1 T-2	2 PCS	S	M6*13	4 PCS

STEP 27

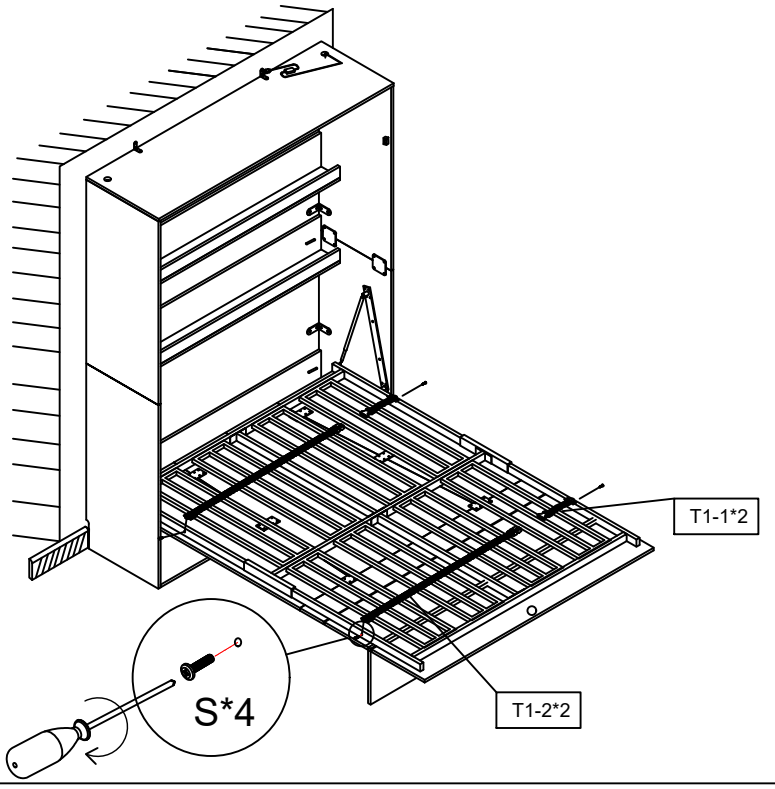

STEP 28

