DIMENSIONS

Streamline

Rough-In Dimensions

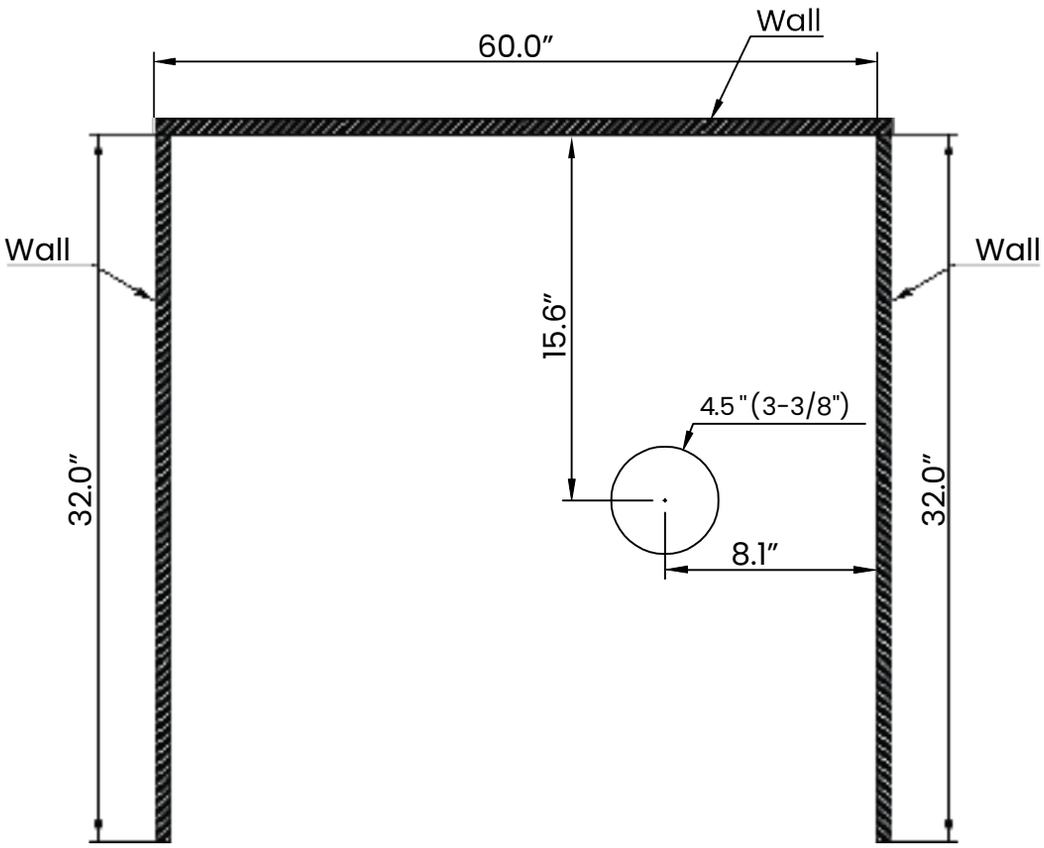

Product Dimensions

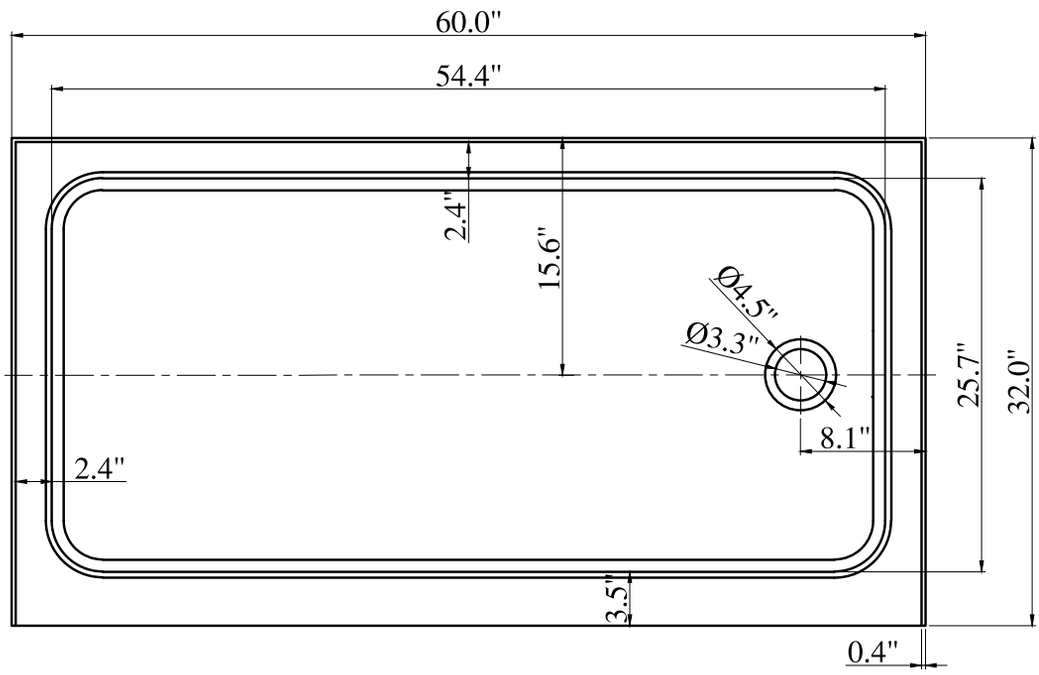

DIMENSIONS

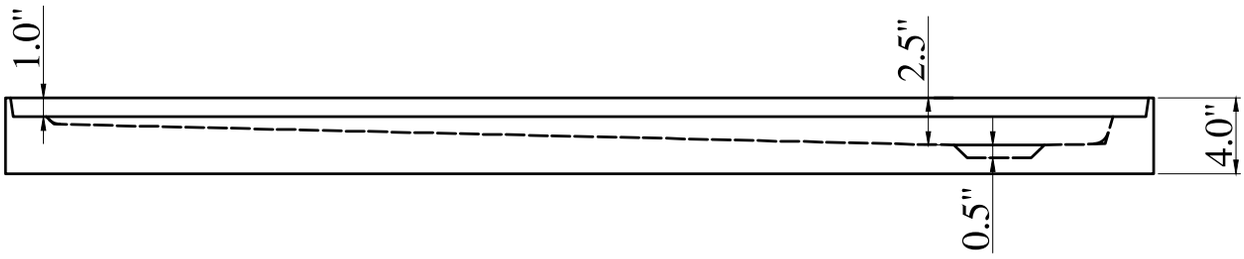

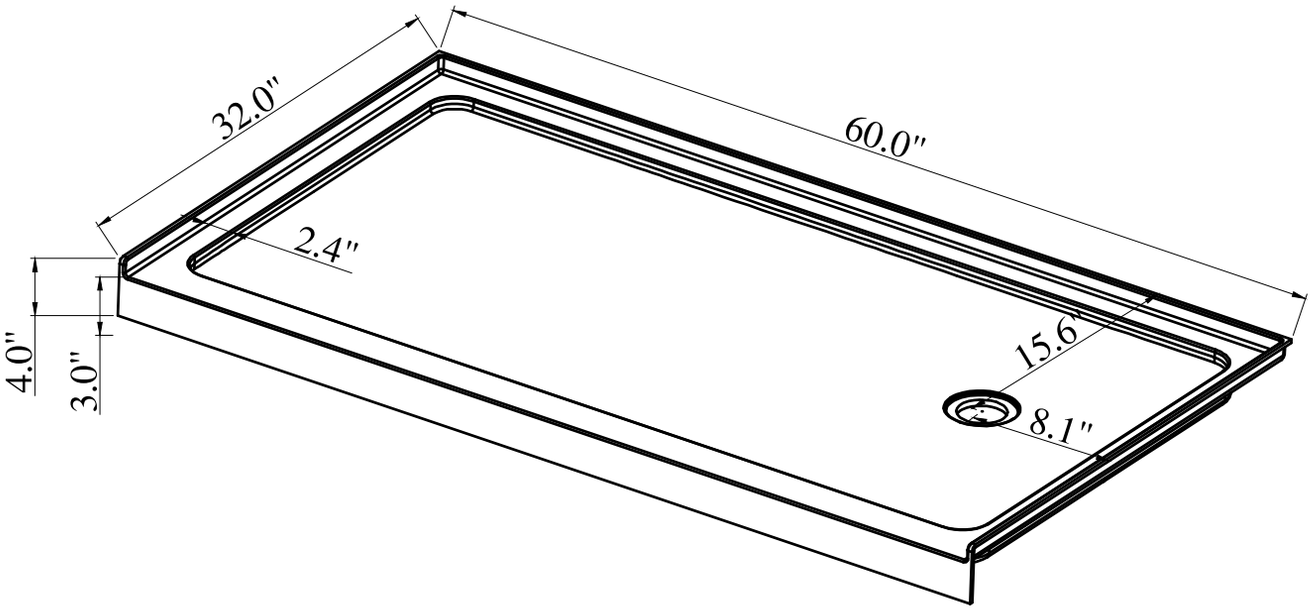

Model number:
P-120-CH

DIMENSIONS
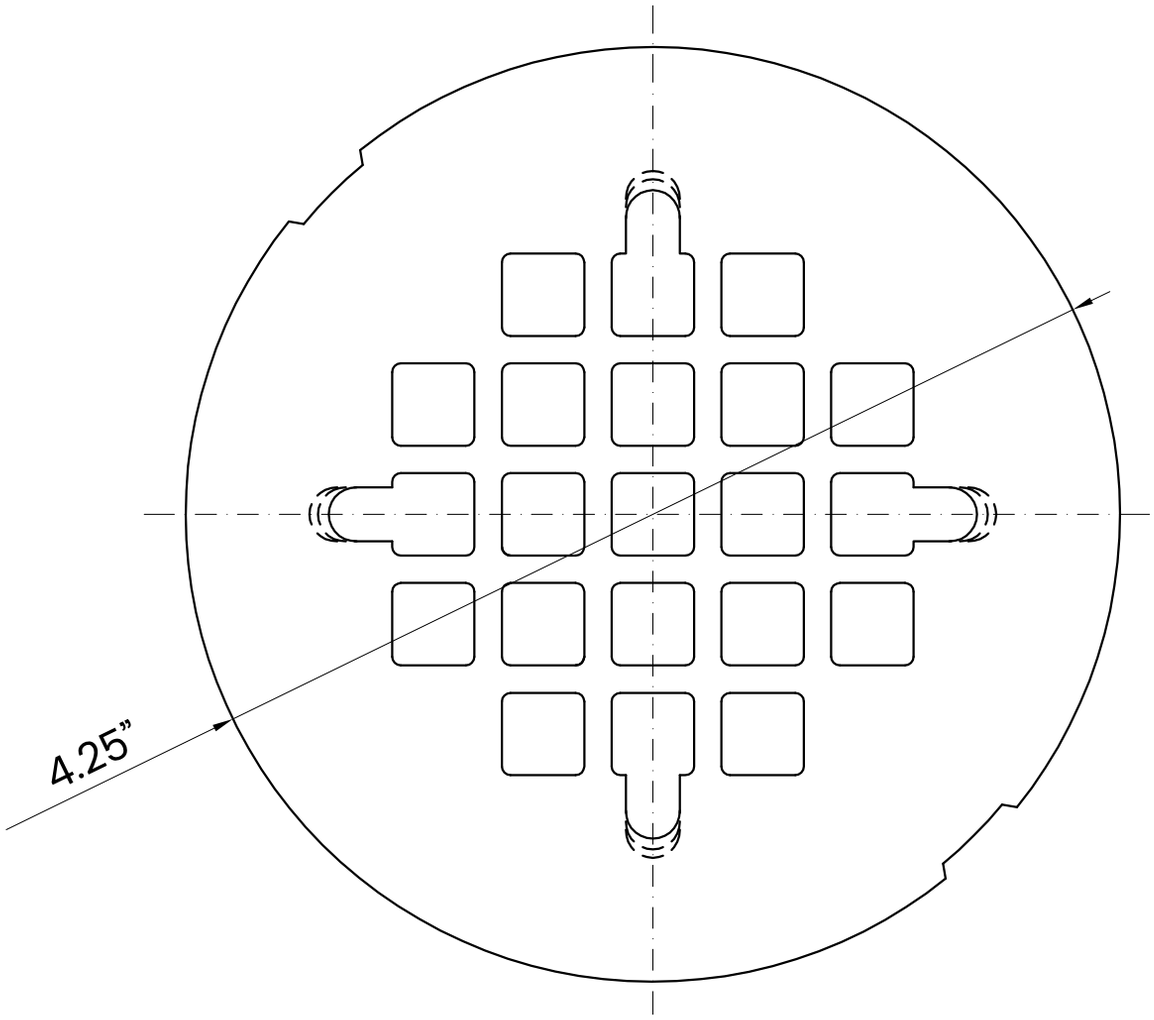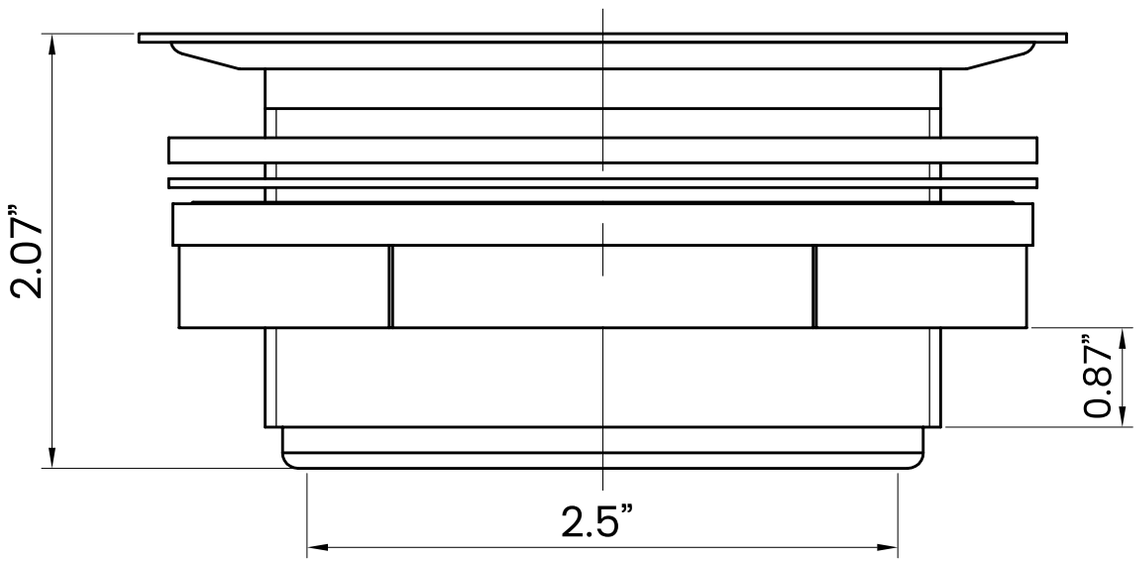
Streamline