ASSEMBLY INSTRUCTIONS
3 DRAWER NIGHT STAND

ASSEMBLY REQUIREMENTS:

2-Person Assembly

2.5Hours Assembly Time (Approximate)

Tool Required (Not Provided)

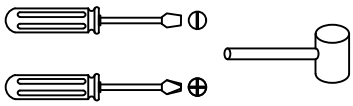

We appreciate your business!

ASSEMBLY PREPARATION:

1 .Remove all packaging materials, staples and packing straps from the carton.
2 .Refer to Part List and Hardware List and ensure parts and hardware are correct before assembly. Contact customer service for missing parts.
3 .Place all wooden parts on clean ,flat and soft surface (e.g. carpet or rug)to prevent scratch and damage to parts.

SAFETY PRECAUTION:

1 .Keep ALL HARDWARE PART OUT OF REACH OF CHILDREN.
2 .DISPOSE PLASTIC PACKAGING MATERIAL IMMEDIATELY TO AVOID ANY RISK OF SUFFOCATION TO CHILDREN AND ANIMALS

TIPS FOR ASSEMBLY:

1 .Allow ample room for assembly and assemble the product near where the product will be placed.
2. Assemble the product on a surface that does not scratch or damage the exterior gloss and finish of the furniture.
3 .Identify all the parts ,hardware and quantities required for each step.
4 .During assembly ,do not over–tighten any fittings as this may cause damage.
5 .DO NOT USE POWER TOOLS TO ASSEMBLE THIS PRODUCT.
6 .Always place the product on a flat ,level surface.
7 .Do not sit or stand on the partially assembled product; only use the product for which it is intended.

CARE AND MAINTENANCE:

- Wipe clean with a soft, dry cloth; avoid the use of harsh chemicals or household cleaners as they may damage the exterior finish of the furniture.
- **Hardware may loosen over time. Periodically, check that all connections are tight; re–tighten as necessary.**
- Solid wood is impacted by heat and humidity fluctuations which may cause small joint separations or hairline cracks; place the furniture away from direct sunlight and air conditioning vents, heating vents or units to protect the furniture.

PARTS LIST

NO	PART NAME	QTY
1	TOP PANEL	1
2	LEFT PANEL	1
3	RIGHT PANEL	1
4	BOTTOM FRAME	1
5	LEG	4
6	CENTER RAIL	1
7	BACK PANEL	1
101	TOP DRAWER FRONT PANEL	1

NO	PART NAME	QTY
102	TOP DRAWER LEFT PANEL	1
103	TOP DRAWER BACK PANEL	1
104	DRAWER BASE PANEL	3
105	TOP DRAWER RIGHT PANEL	1
106	BOTTOM DRAWER FRONT PANEL	2
107	BOTTOM DRAWER LEFT PANEL	2
108	BOTTOM DRAWER BACK PANEL	2
109	BOTTOM DRAWER RIGHT PANEL	2

PARTS ASSEMBLY OVERVIEW

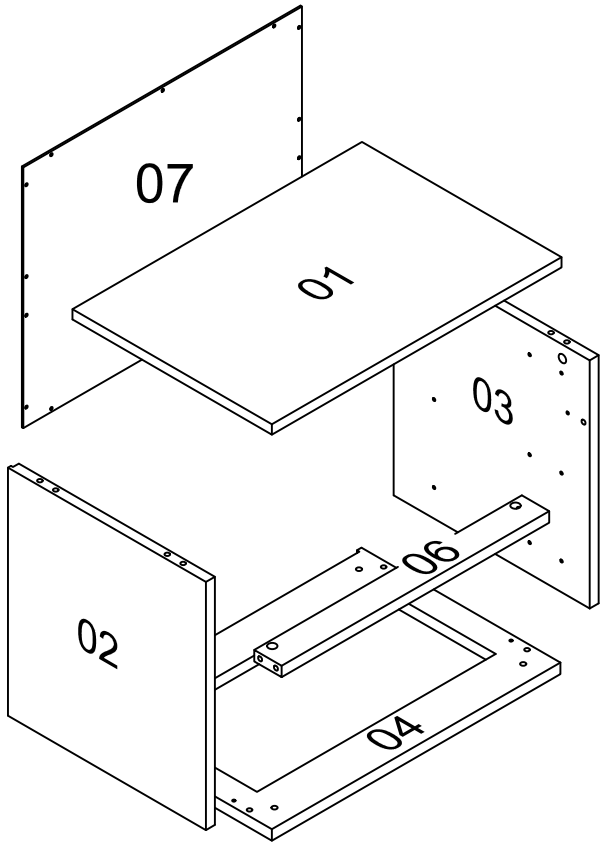

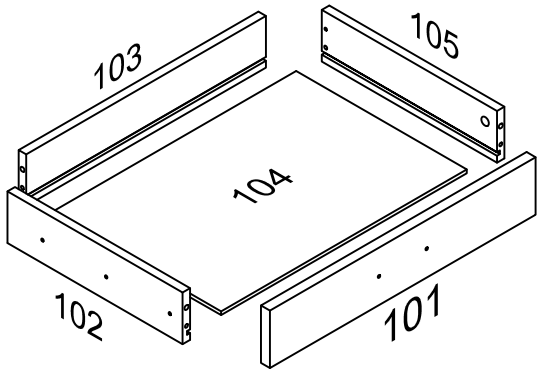

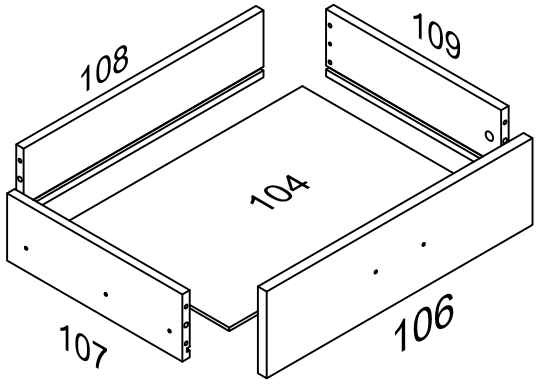

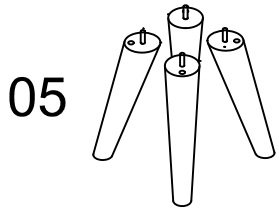

HARDWARE LIST

NO	DESCRIPTION		QTY	EXTRA
A		CHIPBOARD SCREW M4 x 16MM	36	1
B		PANHEAD CHIPBOARD SCREW M4 x 16MM	14	1
C		WOOD DOWEL M8 x 35MM	14	1
D		WOOD DOWEL M6 x 30MM	20	1
E		CAM-LOCK 15 x 12	18	1
F		CAM-BOLT 5 x 25	18	1
G		CAM-LOCK COVER 17 x 5	18	1
H1		DRAWER SLIDE 350MM	3 SET	
H2				

**EXTRA HARDWARE FOR SPARE USE

NO	DESCRIPTION		QTY	EXTRA
I		HANDLE	3	
J		PANHEAD SCREW M4 x 25MM	6	
K		CHIPBOARD SCREW M4 x 38MM	4	1
L		SPRING WASHER M8	4	1
M		FLAT WASHER M8	4	1
N		HEX NUT M6	4	1
O		WRENCH	1	1

DRAWER SLIDE DISASSEMBLE STEPS:

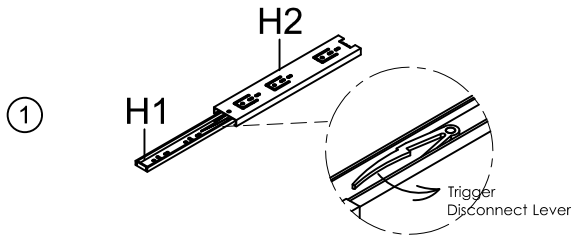

A) Distinguish between Slide Track (H2) and Slide Runner (H1) of Drawer Slide.
B) Slide out H1 from H2 until Trigger Disconnect Lever is visible.
C) Depress the Trigger Disconnect Lever in the groove of H1 and at the same time slide out H2 completely from H1.

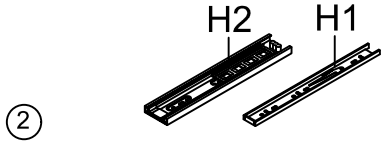

INSTRUCTION FOR CAM-BOLT & CAM-LOCK

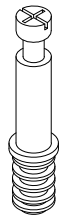

CAM-BOLT

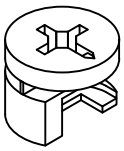

CAM-LOCK

Tool Required (Not Provided)

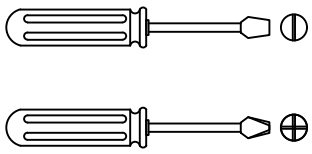

INSERTING AND TIGHTENING CAM-BOLT

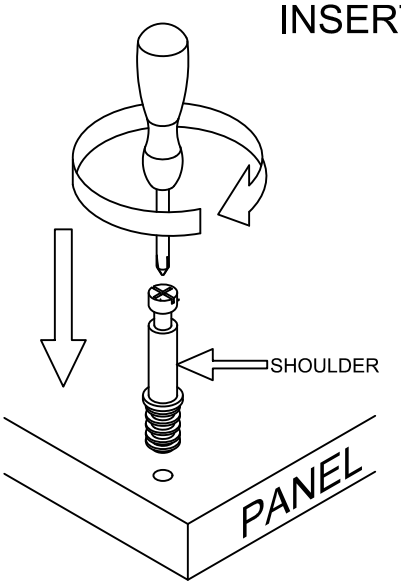

Place Cam-bolt on pre-drilled hole and screw in vertically

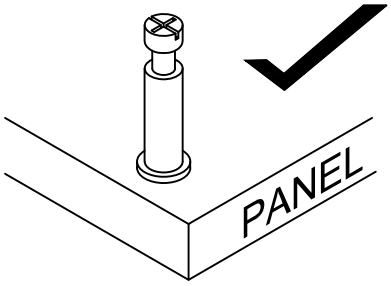

Shoulder is flushed (on the same level) with the panel

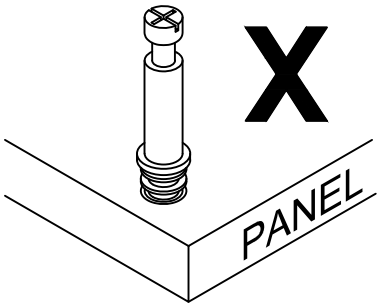

Shoulder is above the panel

Place Cam-bolt on the designated pre-drilled holes on the panel. Use a Phillips Screwdriver to screw-in Cam-bolt vertically until shoulder is flushed (on the same level) with panel.

INSERTING CAM-LOCK

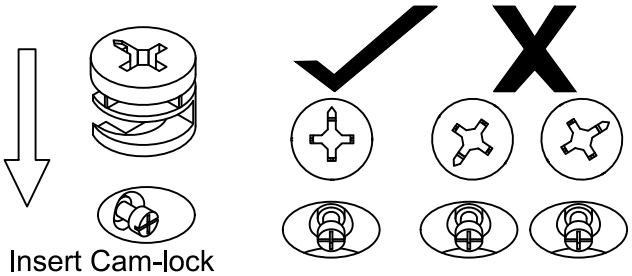

Insert Cam-lock with arrow align to Cam-bolt head

TIGHTENING CAM-LOCK

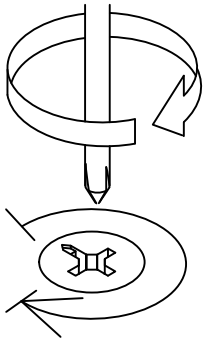

CAM-LOCK
Align the arrow on the Cam-lock to the Cam-bolt head and insert the Cam-lock .Ensure Cam-lock is fully inserted

Use a Screwdriver to turn Cam-lock clockwise so it locks onto the head of the Cam-bolt. Turn until it is snug (about 3/4ths of a turn) -- over -tightening could damage Cam-lock or/and Cam-bolt.

STEP 1

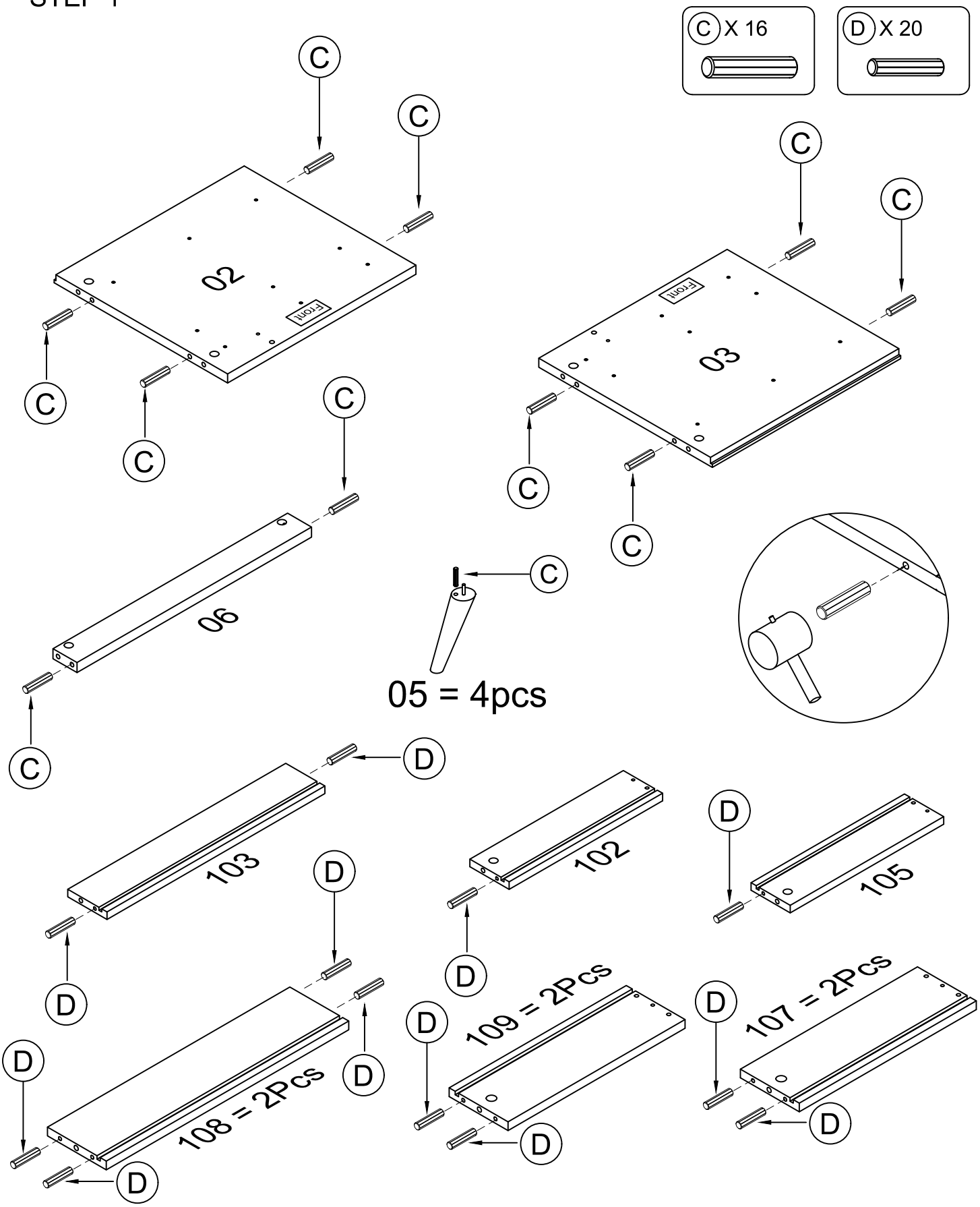

A. Lay Left & Right Panel (2 & 3), Center Rail (6), Leg (5), Top Drawer Back Panel (103), Top Drawer Left & Right Panel (102 & 105), Bottom Drawer Back Panel (108) and Bottom Drawer Left & Right Panel (107 & 109) as shown on a material that does not scratch or damage the parts.

B. Identify the designated holes for Wood Dowel (C or D) on each part.

C. Insert Wood Dowel (C or D) into the designated holes of the respective parts, use a mallet to lightly tap in Wood Dowel (C or D) if necessary.

STEP 2

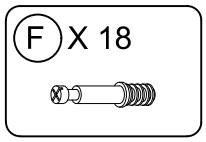

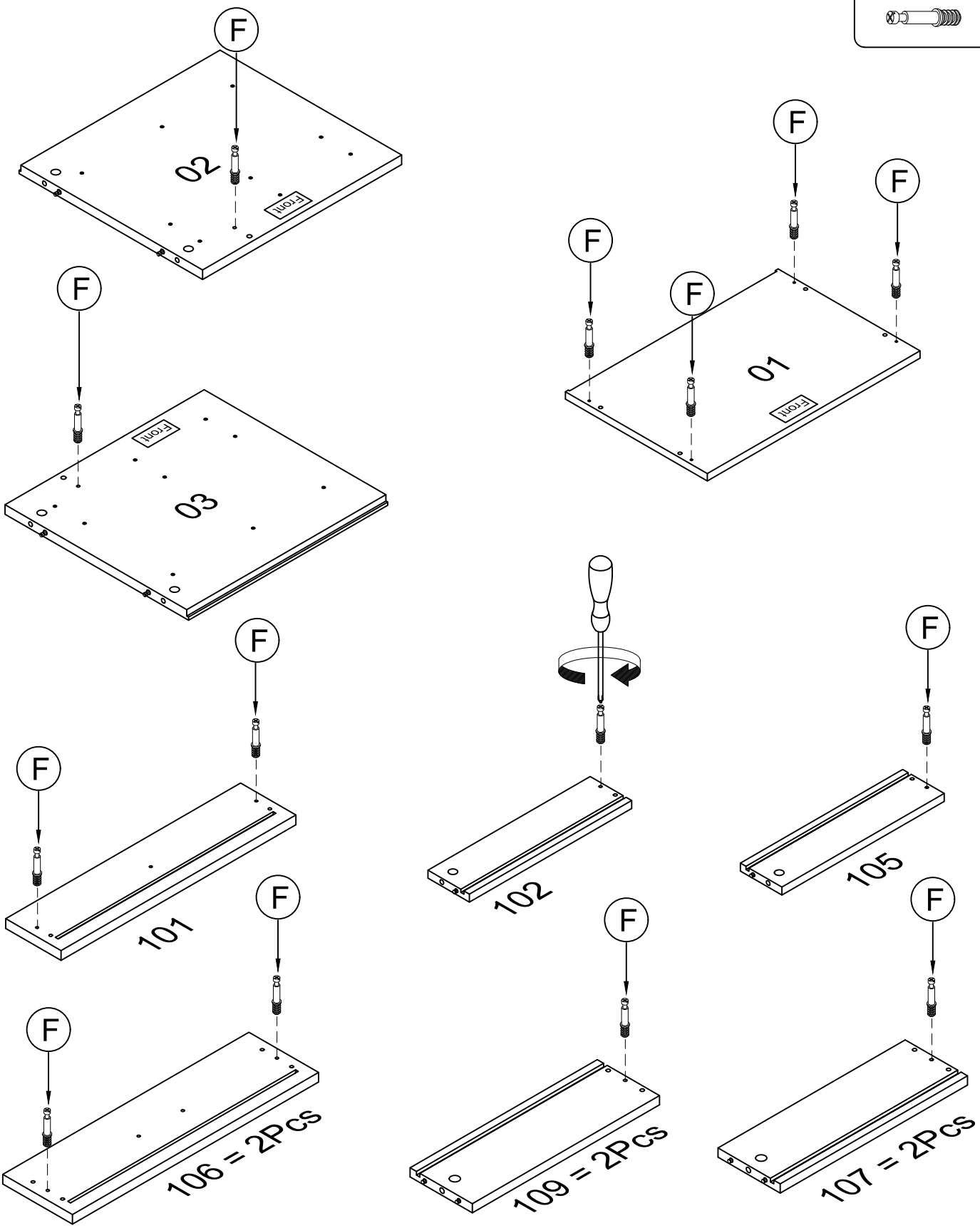

A. Lay the parts as shown on a material that does not scratch or damage the parts.

B. Screw in Cam-Bolt (F) into the designated holes on Top Panel (1), Left & Right Panel (2 & 3), Top Drawer Front Panel (101), Top Drawer Left & Right Panel (102 & 105), Bottom Drawer Front Panel(106) and Bottom Drawer Left & Right Panel (107 & 109).

Refer to page 4 for instructions on inserting and tightening Cam-Bolt (F).

STEP 3

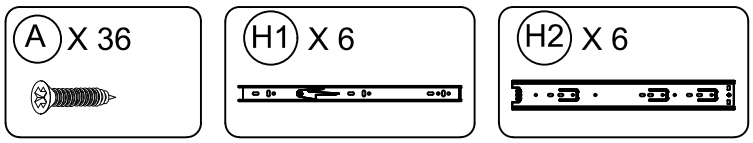

STEP 3A

Identify the pilot holes on Top Drawer Left & Right Panel (102 & 105) and Bottom Drawer Left & Right Panel (107 & 109) and install Slide Runner (H1) using Chipboard Screw (A) - ensure that the screws are screwed in vertically. Do not tighten the screw completely until all three screws are in place. Note: The sequence of fastening Screw (A) is from the front to the back.

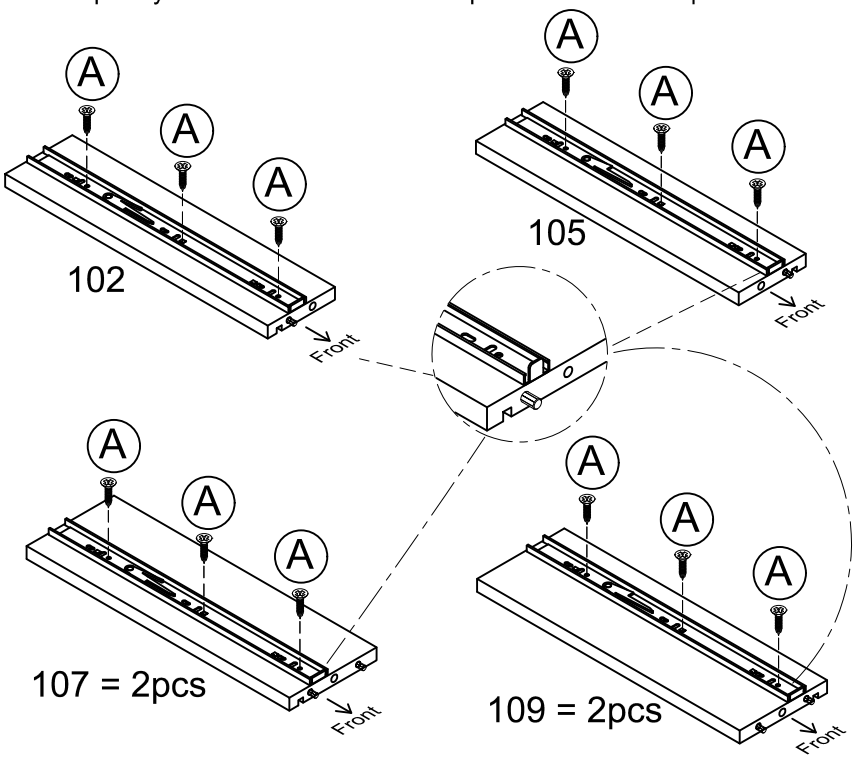

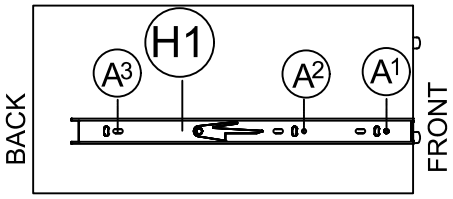

DRAWER SLIDE DISASSEMBLE STEPS:

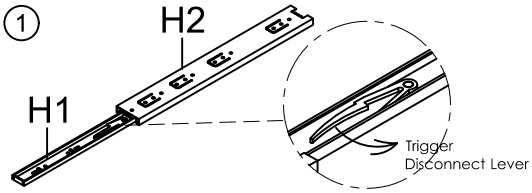

A) Distinguish between Slide Track (H2) and Slide Runner (H1) of Drawer Slide.
B) Slide out H1 from H2 until Trigger Disconnect Lever is visible.
C) Depress the Trigger Disconnect Lever in the groove of H1 and at the same time slide out H2 completely from H1.

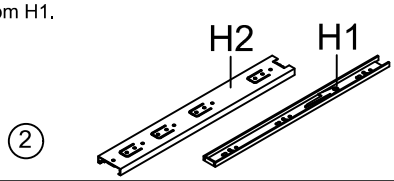

STEP 3B

Identify the pilot holes on Left & Right Panel (2 & 3) for Slide Track (H2) Use Screw (A) to fasten (H2)- ensure that the screws are screwed in vertically. Do not tighten the screw completely until all three screws are in each track.

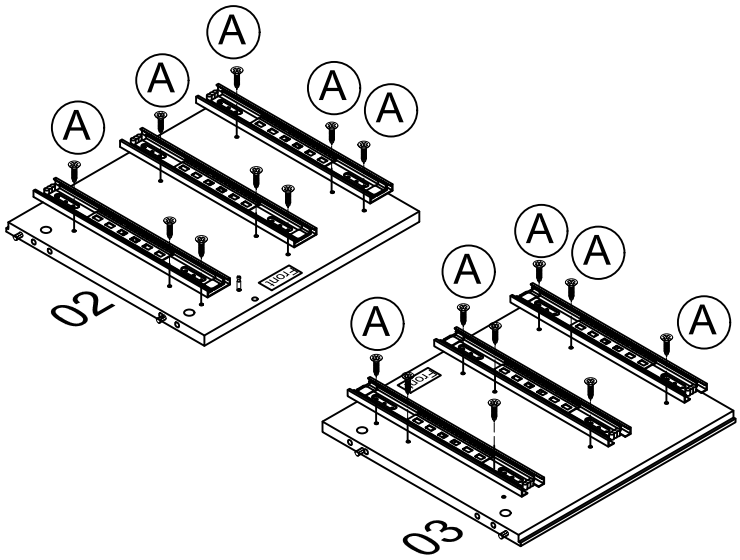

Step 1: Screw in A^1 and A^3 on a view hole.

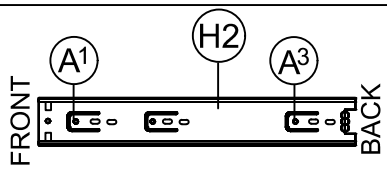

Step 2: Adjust Metal Chrome Plate, screw in A^2 on a view hole

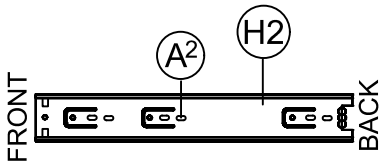

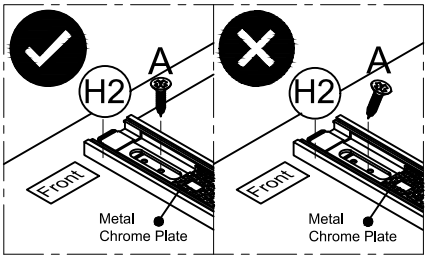

STEP 4

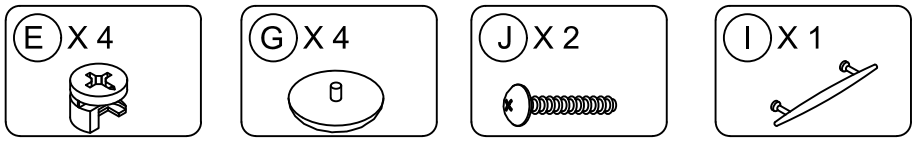

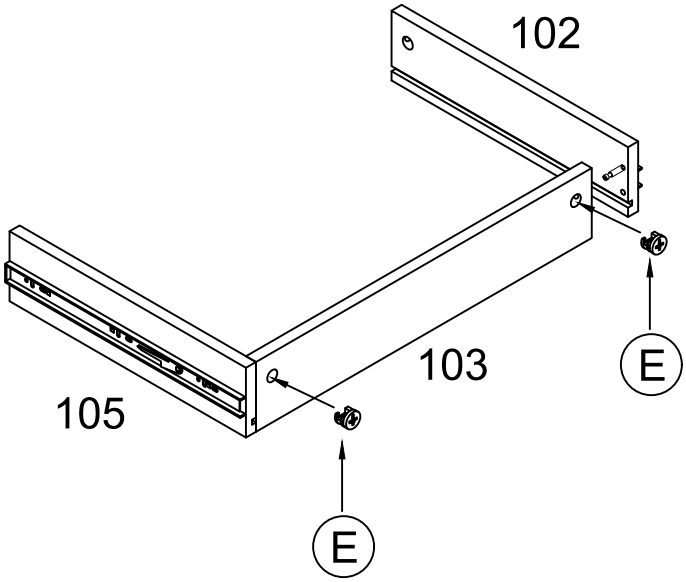

STEP 4A

a) Attach Top Drawer Left & Right Panel (102 & 105) to Top Drawer Back Panel (103) via Wood Dowel and Cam-Bolt on each part respectively.

b) Insert Cam-Lock (E) to designated hole on Top Drawer Back Panel (103) then turn clockwise to lock onto Cam-Bolt.

c) Insert Cam-Lock Cover (G) to conceal Cam-Lock (E).

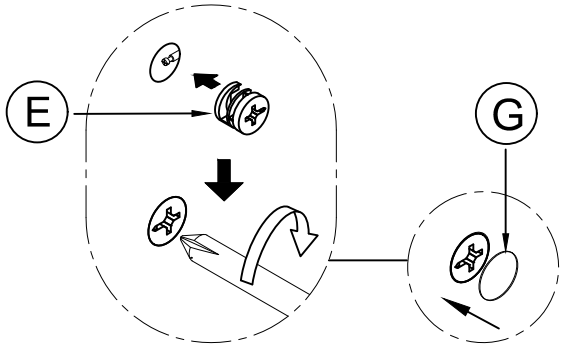

STEP 4B

a) Fit Drawer Base Panel (104) via groove on Top Drawer Side and Top Drawer Back Panel.

b) Attach Top Drawer Front Panel (101) to Top Drawer Left & Right Panel (102 & 105) via Cam-Bolt and Wood Dowel on the respective parts. Check that Drawer Base Panel (104) fits into the groove on the inside face of Top Drawer Front Panel (101).

c) Insert Cam-lock (E) into designated holes on Top Drawer Left & Right Panel (102 & 105) and turn clockwise to lock onto Cam-bolt.

d) Insert Cam-lock Cover (G) to conceal Cam-lock.

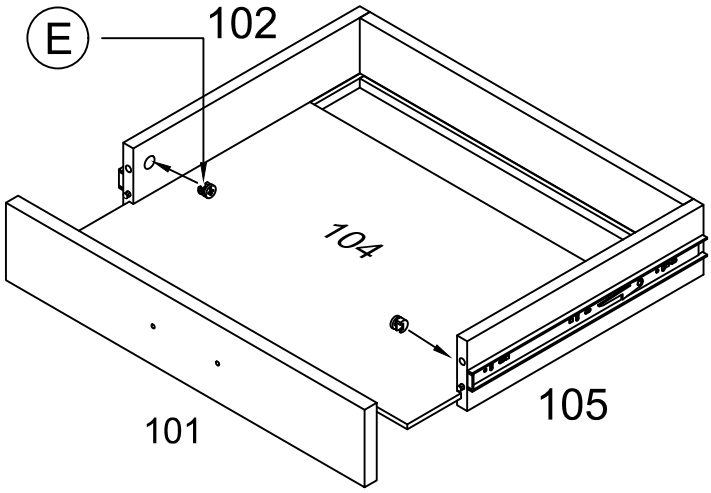

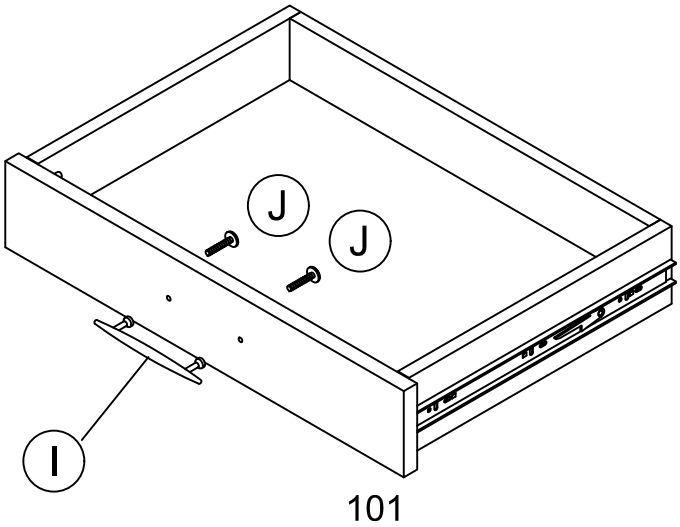

STEP 4C

Affix Handle (I) to Top Drawer Front Panel (101) with Panhead Screw (J)

STEP 5

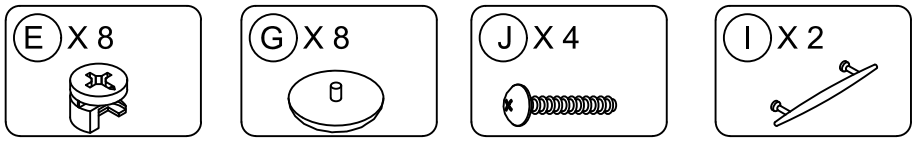

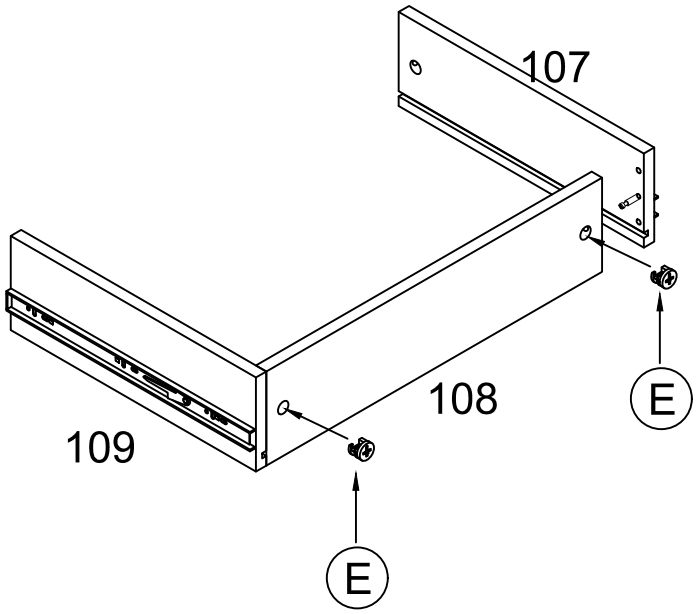

STEP 5A

a) Attach Bottom Drawer Left and Right Panel (107 & 109) to Bottom Drawer Back Panel (108) via Wood Dowel and Cam-Bolt on each part respectively.

b) Insert Cam-Lock (E) to designated hole on Bottom Drawer Back Panel (108) then turn clockwise to lock onto Cam-Bolt.

c) Insert Cam-Lock Cover (G) to conceal Cam-Lock (E).

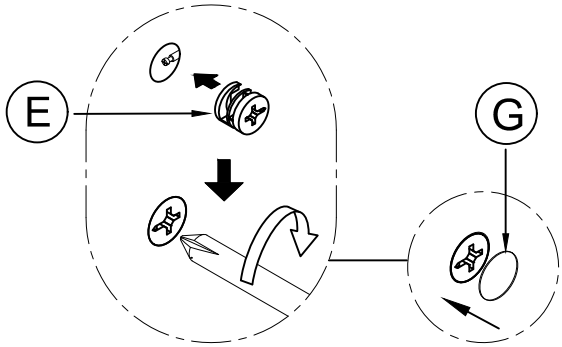

STEP 5B

a) Fit Drawer Base Panel (104) via groove on Bottom Drawer Side and Bottom Drawer Back Panel.

b) Attach Bottom Drawer Front Panel (106) to Bottom Drawer Left & Right Panel (107 & 109) via Cam-Bolt and Wood Dowel on the respective parts. Check that Drawer Base Panel (104) fits into the groove on the inside face of Bottom Drawer Front Panel (106).

c) Insert Cam-lock (E) into designated holes on Bottom Drawer Left & Right Panel (107 & 109) and turn clockwise to lock onto Cam-bolt.

d) Insert Cam-lock Cover (G) to conceal Cam-lock.

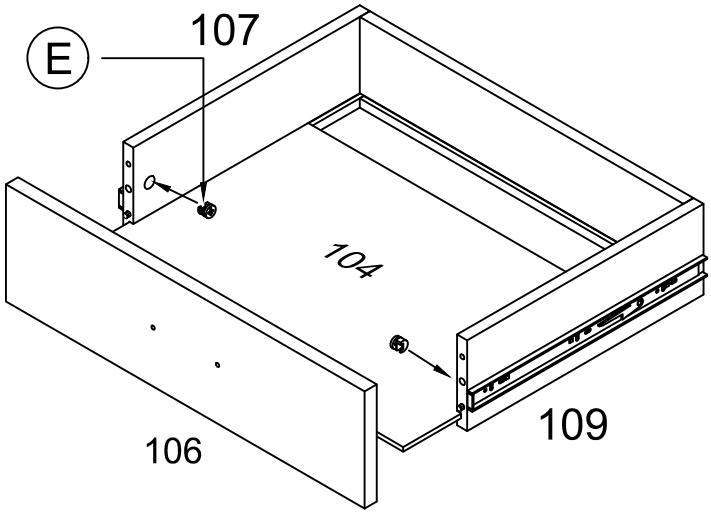

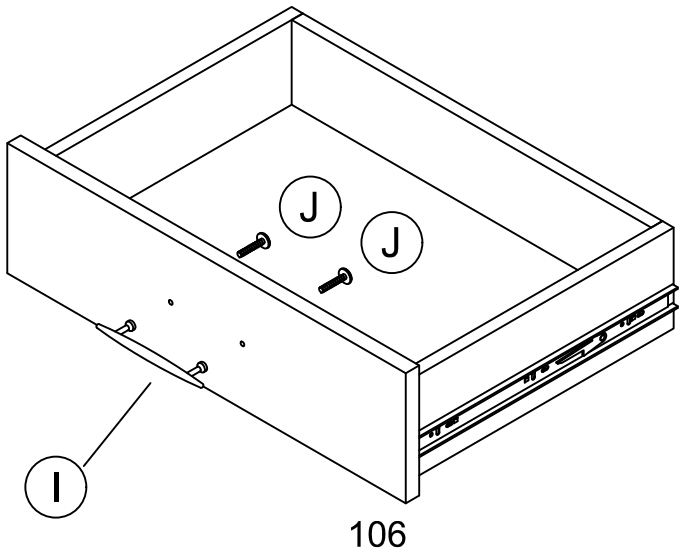

STEP 5C

Affix Handle (I) to Bottom Drawer Front Panel (106) with Panhead Screw (J)

STEP 6

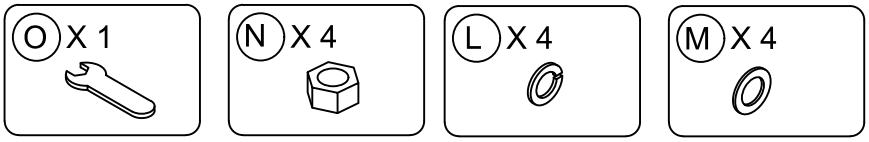

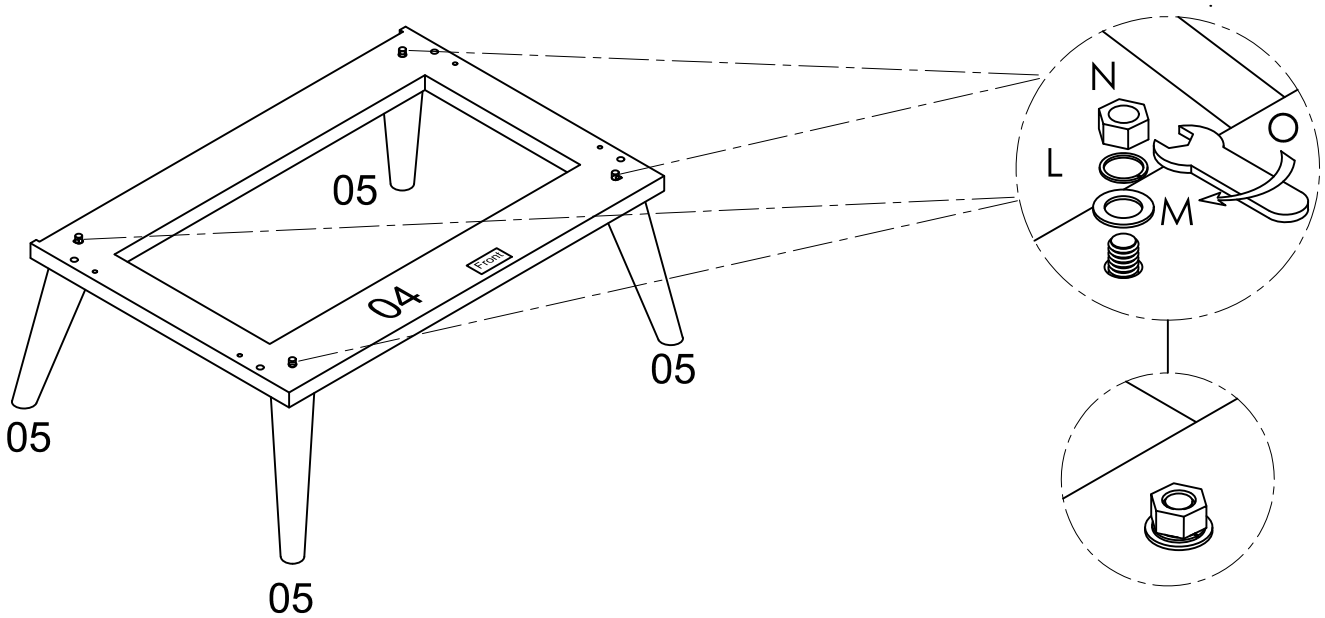

A. Attach Leg (5) to Bottom Frame (4) and fasten with Flat Washer (M), Spring Washer (L) and Hex Nut (N). Use Wrench (O) to tighten Hex Nut (N).

STEP 7

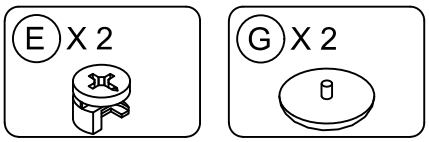

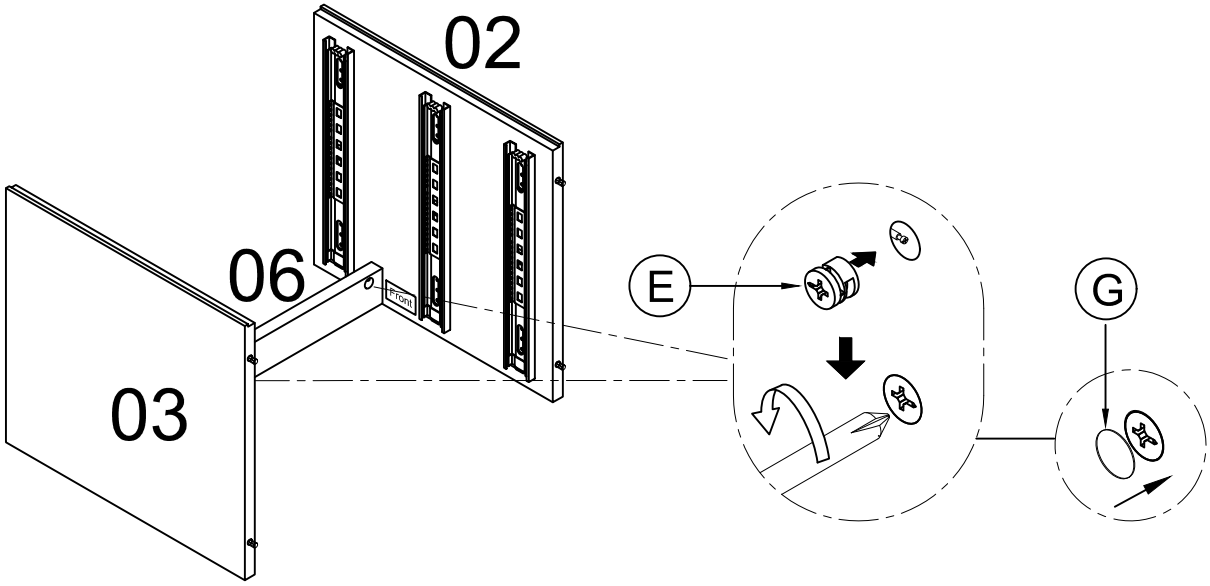

A. Attach Center Rail (6) to Left & Right Panel (2 & 3), via Cam-Bolt and Wood Dowel on respective parts.

B. Insert Cam-lock (E) into designated hole on Left & Right Side Panel (2 & 3), then turn clockwise to lock onto Cam-Bolt.

C. Insert Cam-Lock Cover (G) to cover Cam-Lock (E).

STEP 8

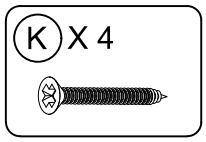

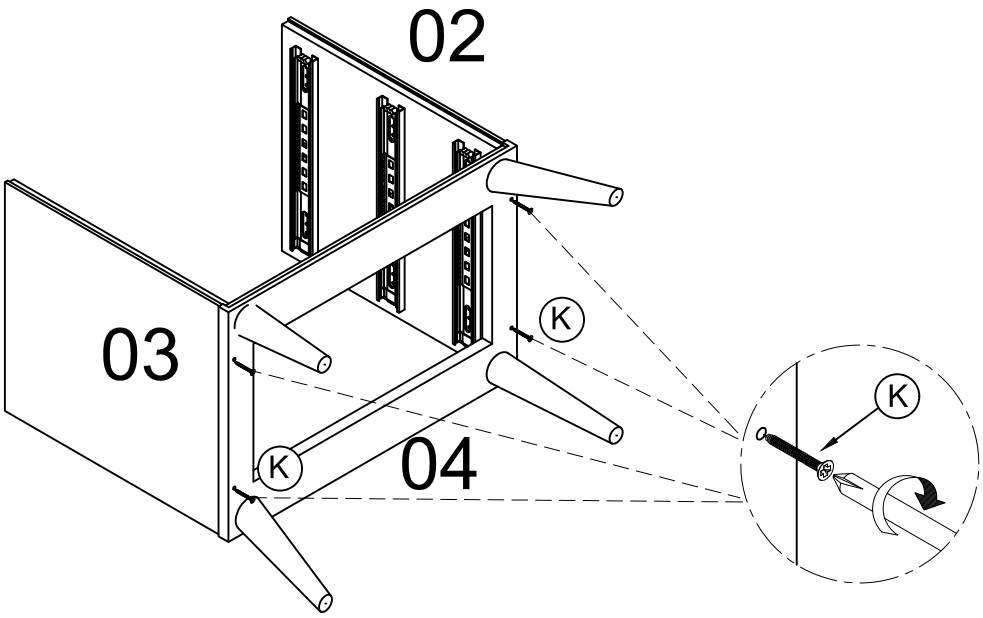

A. Use Chipboard Screw (K) to fasten Bottom Frame (4) to Left & Right Panel (2 & 3). Do not tighten Screw (B) completely until all the screws are in place.

STEP 9

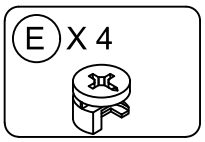

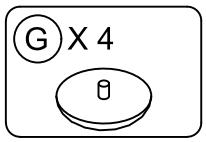

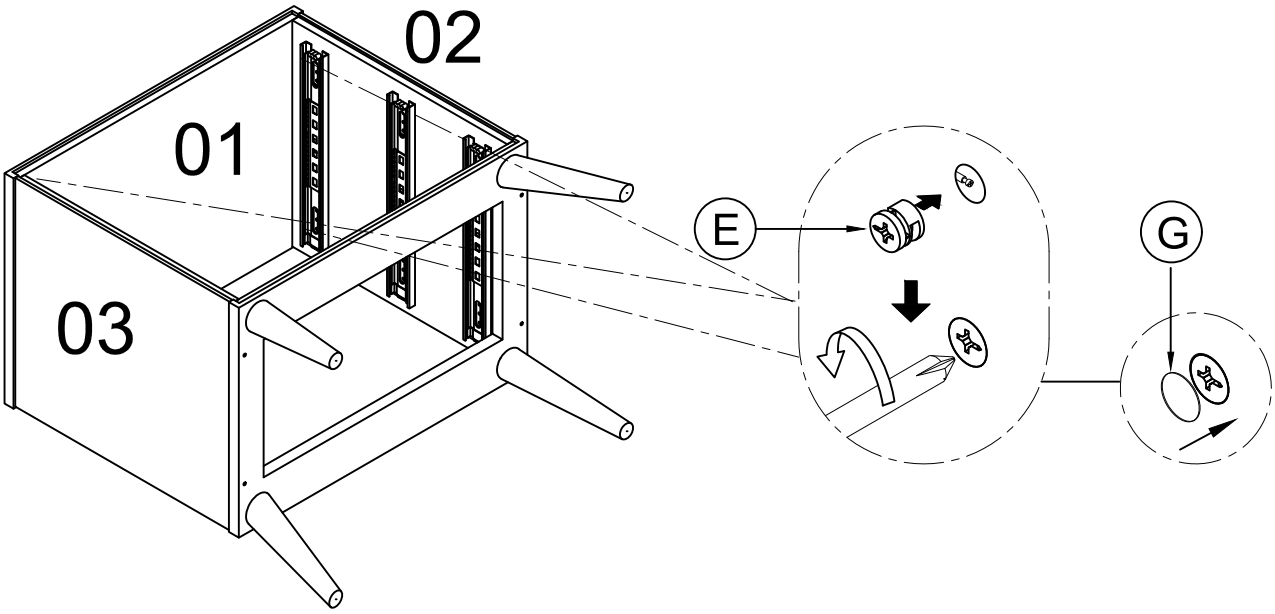

A. Attach Top Panel (1) to Left & Right Panel (2 & 3), via Cam-Bolt and Wood Dowel on respective parts.

B. Insert Cam-lock (E) into designated hole on Left & Right Side Panel (2 & 3), then turn clockwise to lock onto Cam-Bolt.

C. Insert Cam-Lock Cover (G) to cover Cam-Lock (E).

STEP 10

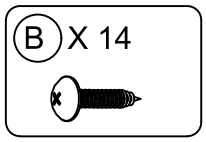

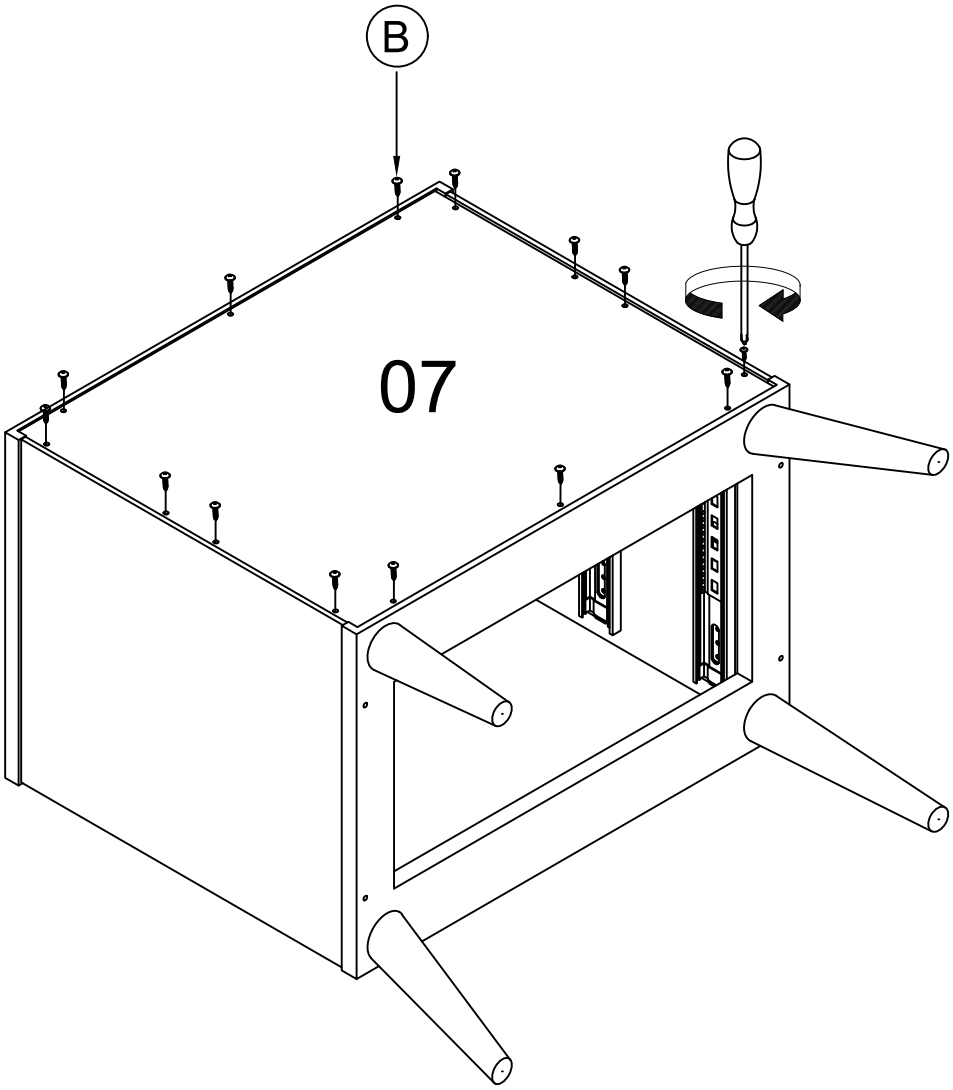

a) Attach Back Panel (7) squarely to Left & Right Panel, Top Panel and Bottom Frame and fasten with Panhead Chipboard Screw (B).

STEP 11

STEP 11A

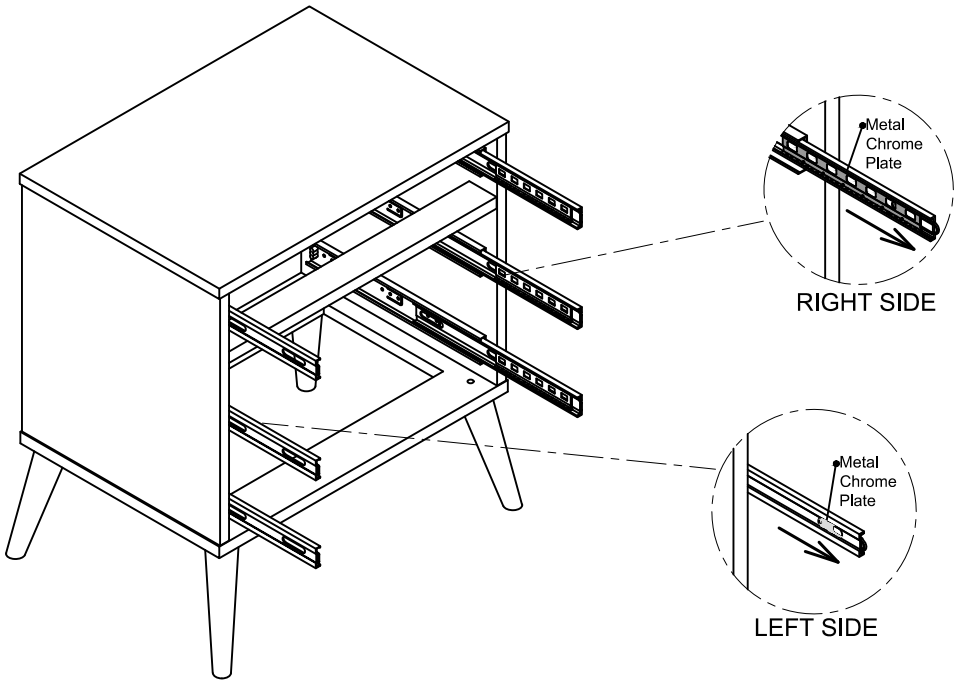

a. Slide out Metal Chrome Plate (ball bearing slider) on both sides of Slide Track (H2).

STEP 11B

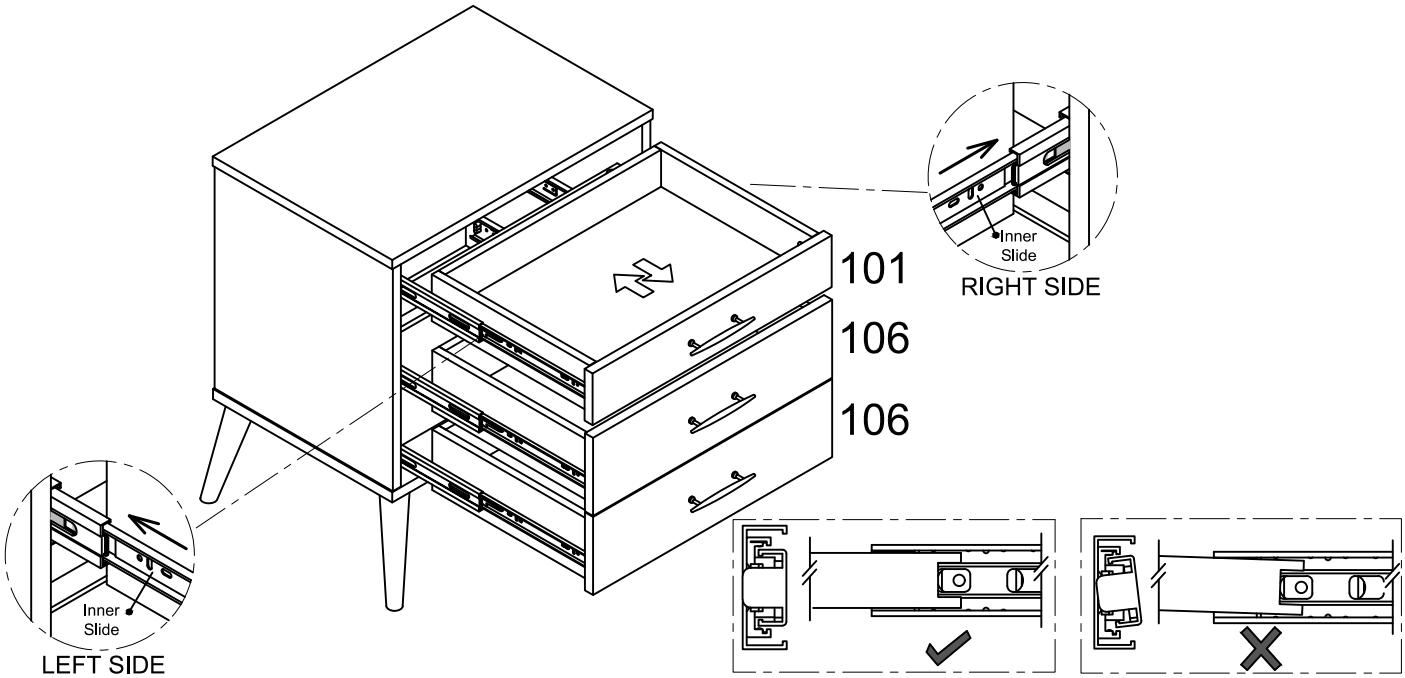

Align the back open-end of the Slide Runner (H1) on each side of the drawer to fit squarely into the groove on the open front-end of the chrome plate on Slide Track (H2) on the Side Panels.

Be sure the drawer/(H1) is not tilted or angled and push in the drawer slightly and squarely.

Push in the drawer further in gently - when the Trigger Disconnect Lever on (H1) is engaged onto (H2) there will be a slight resistance - this is normal. Pull out the drawer a little bit and gently push in the drawer again to engage the Trigger Disconnect Lever to the slide mechanism on (H2). The drawer should now slide smoothly.

If the drawer cannot be pushed in or stuck, do not force it in. Remove the drawer and repeat the steps above.

STEP 11C

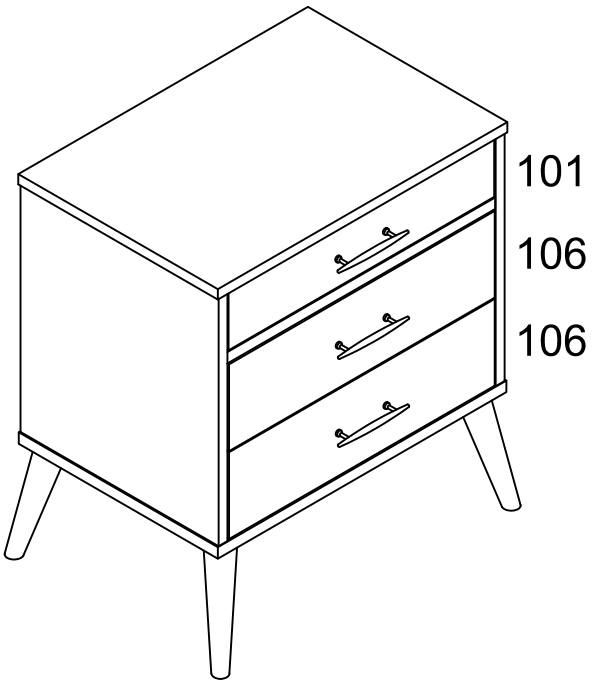

Drawers should be assembled as follows

The assembly of the Night Stand is complete.