ASSEMBLY INSTRUCTION

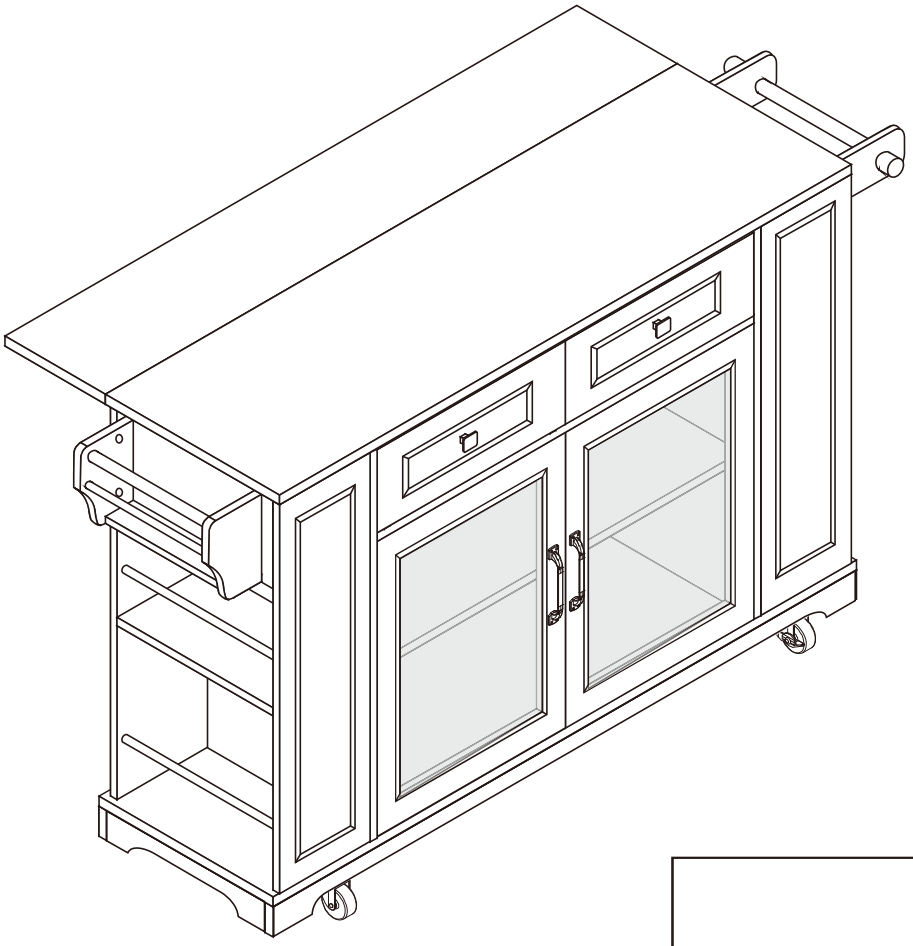

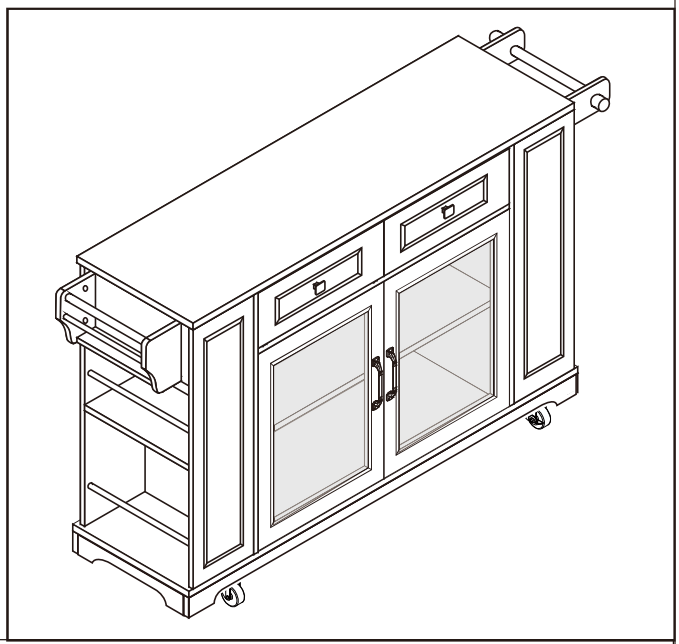

2 PERS

1 h 30 min

Tool Required Not Provided

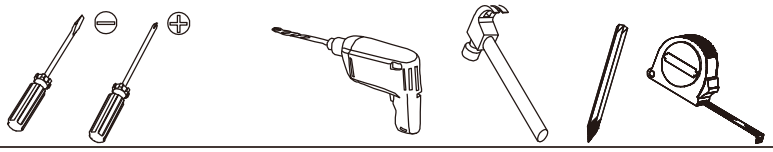

Before Installation

Important-Please read these instructions fully before starting assembly

Thank you for purchasing this quality product.Be sure to check all packing materials carefully for small parts,which may have come loose inside the carton during shipment.Identify and count all items according to the PARTS LIST and/or HARDWARE LIST shown below.Check you have all the components and tools listed on the following pages.

- We recommend that you assemble this product with the assistance of another person;this will make the assembly easier,and will help eliminate damage to the product or injury to persons during assembly.
- Please do not over tighten screws or bolts until the assembly is completed.
- Keep children and animal away from the work area,small parts could choke if swallowed.·Please put all parts on a non-abrasive floor before assembly,and follow the assembly steps to assemble your newly purchased product correctly and efficiently.

Cam Lock Assembly Instructions

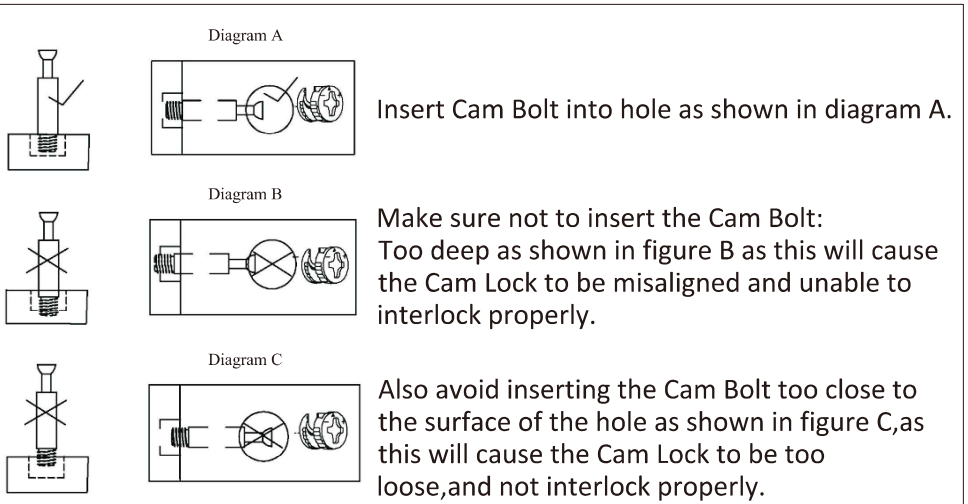

Insert Cam Bolt into hole as shown in diagram A.

Make sure not to insert the Cam Bolt:
Too deep as shown in figure B as this will cause the Cam Lock to be misaligned and unable to interlock properly.

Also avoid inserting the Cam Bolt too close to the surface of the hole as shown in figure C,as this will cause the Cam Lock to be too loose,and not interlock properly.

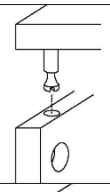

Connect the panels together.

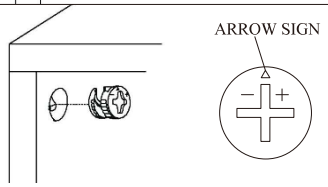

Insert the Cam Lock so the side opening fits over the head of the Cam Bolt.

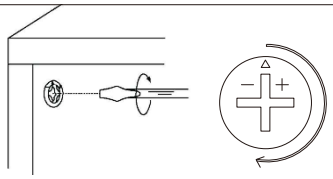

To tighten the Cam Lock,turn it clockwise on half a turn with a flat screwdriver.
*Do not use an automatic screwdriver as it may bend or break if too much power is imposed.

PARTS

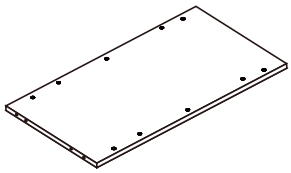 ① x 1	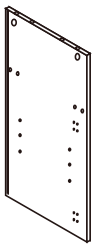 ② x 1	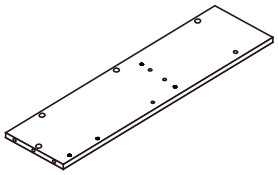 ③ x 1	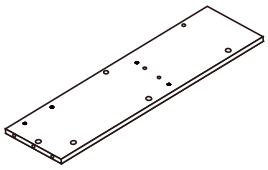 ④ x 1
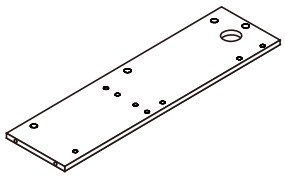 ⑤ x 1	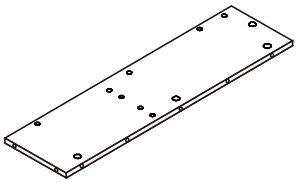 ⑥ x 1	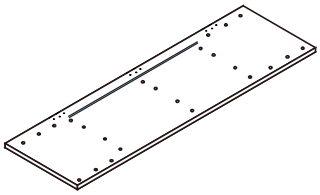 ⑦ x 1	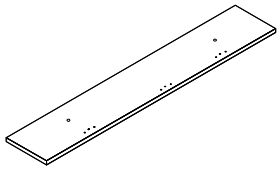 ⑧ x 1
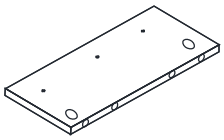 ⑨ x 1	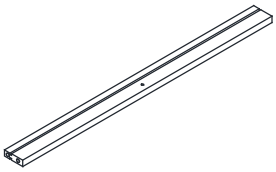 ⑩ x 1	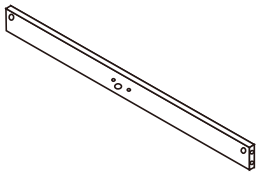 ⑪ x 1	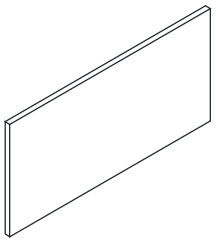 ⑫ x 1
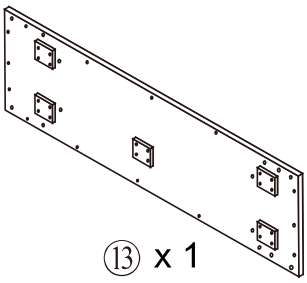 ⑬ x 1	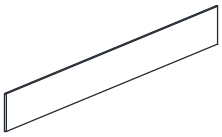 ⑭ x 1	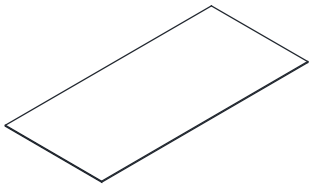 ⑮ x 2	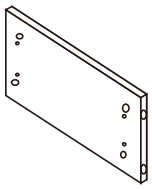 ⑯ x 1
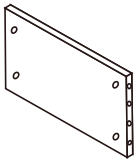 ⑰ x 2	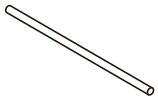 ⑱ x 4	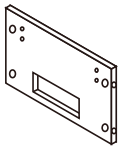 ⑲ x 1	 ⑳ x 2
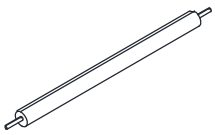 ㉑ x 1	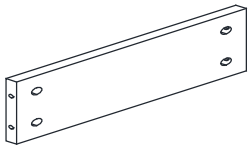 ㉒ x 1	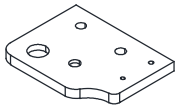 ㉓ x 1	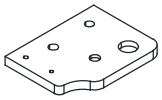 ㉔ x 1

PARTS

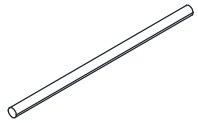 ㉕ x 1	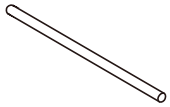 ㉖ x 1	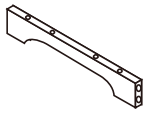 ㉗ x 2	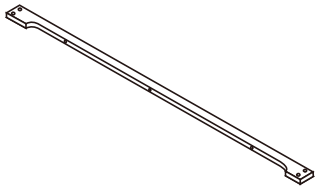 ㉘ x 2
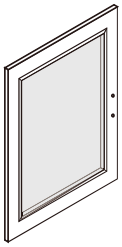 ㉙ x 1	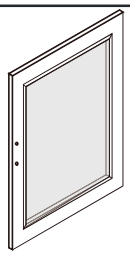 ㉚ x 1	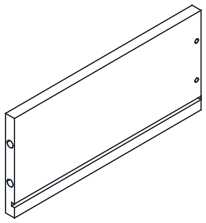 ㉛ x 2	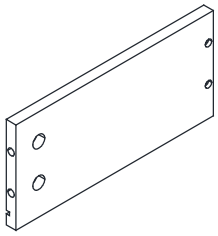 ㉜ x 2
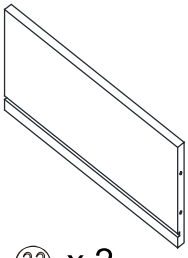 ㉝ x 2	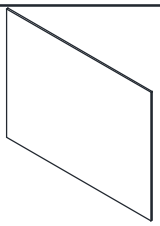 ㉞ x 2	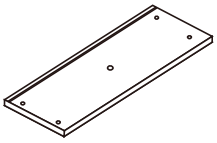 ㉟ x 1	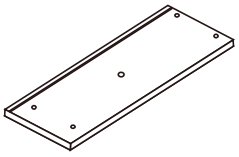 ㊱ x1
 ㊲ x 2	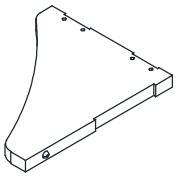 ㊳ x 1	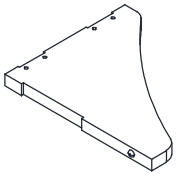 ㊴ x 1	 ㊵ x1

HARDWARE

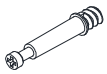 A x 60	 B x 60	 Φ6x30mm C x 60	 Φ7x50mm D x 12	 Φ3x12mm E x 58	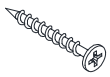 Φ4x30mm F x 11	 G x 4	 H x 1	 Φ6x40mm I x 8	 Φ4x40mm J x 11
 K x 2	 L x 4	 M x 9	 N x 1	 O x 16	 P x 3	 Q x 2	 Φ4x12mm R x 21	 S x 4	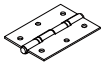 T x 3
 U x 2	 Φ3x14mm V x 11	 Φ4x12mm W x 26	 Φ4x18mm X x 6	Y x 1	Z x 1	CL x 2	CR x 2	DL x 2	DR x 2

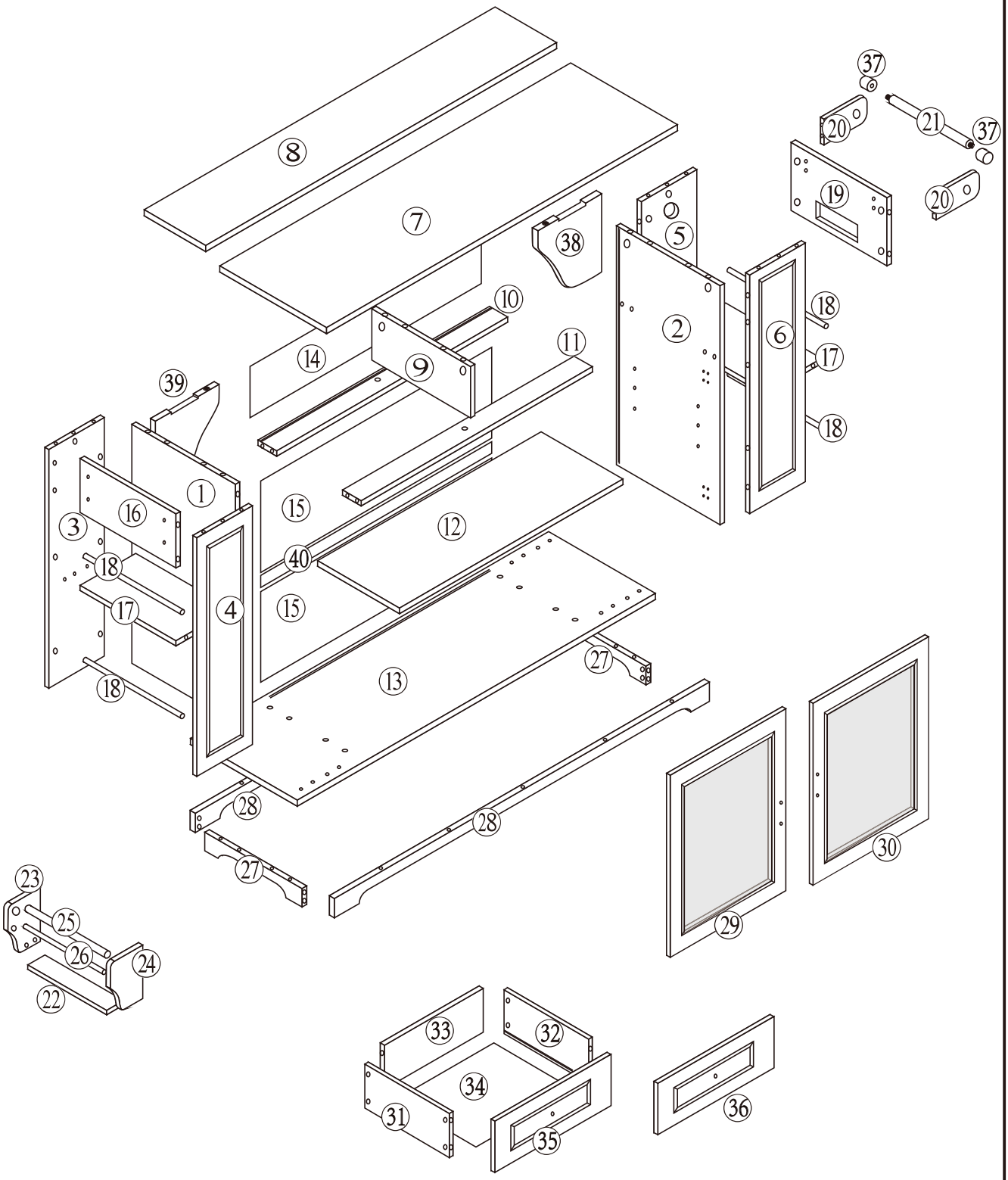
8
7
38
37
20
21
37
19
20
5
2
6
18
17
18
10
11
14
9
39
1
16
3
18
17
18
15
12
40
15
4
13
27
28
28
27
23
25
26
24
22
29
30
33
32
34
31
35
36

1.

Attached Part （20）*2 with Part （21）and fix them by Part (37) *2.

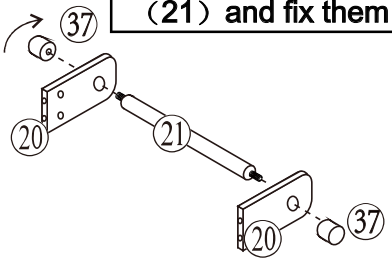

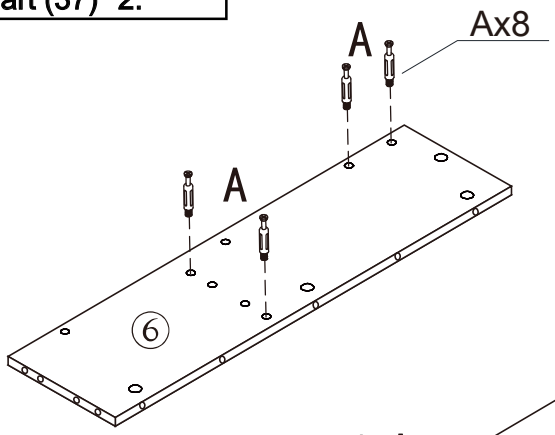

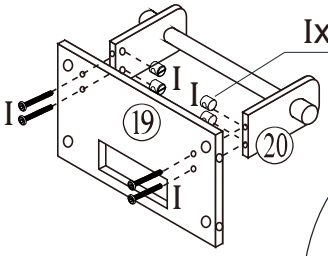

Attached pre-assembly Part(20)&(21)&(37)with Part（19）and fix them by Hardware I *4.

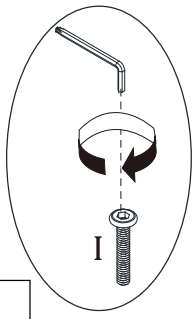

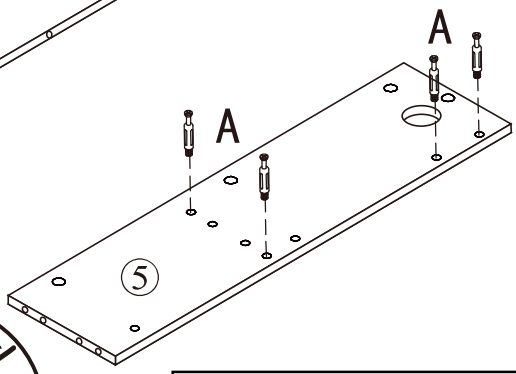

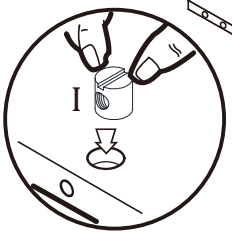

Attached Hardware A*8 with Part(5)&(6)

Ax8	I x4	Nx1
		

2.

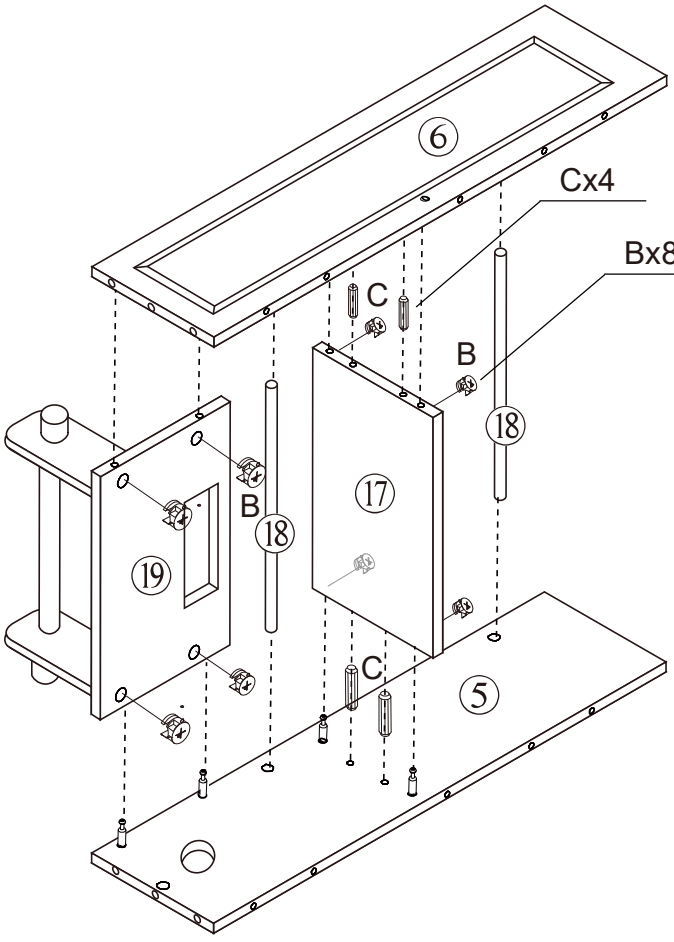

Attached pre-assembly Part(20)&(21)&(37)（19）and Part(17) & Part (18)*2 with Part(5)and Part(6) and fix them by Hardware B *8 and C*4.

Bx8	Cx4
	

3.

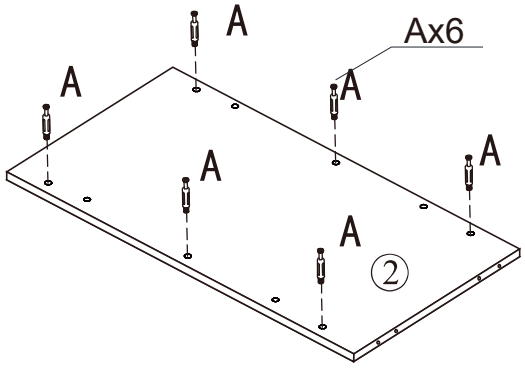

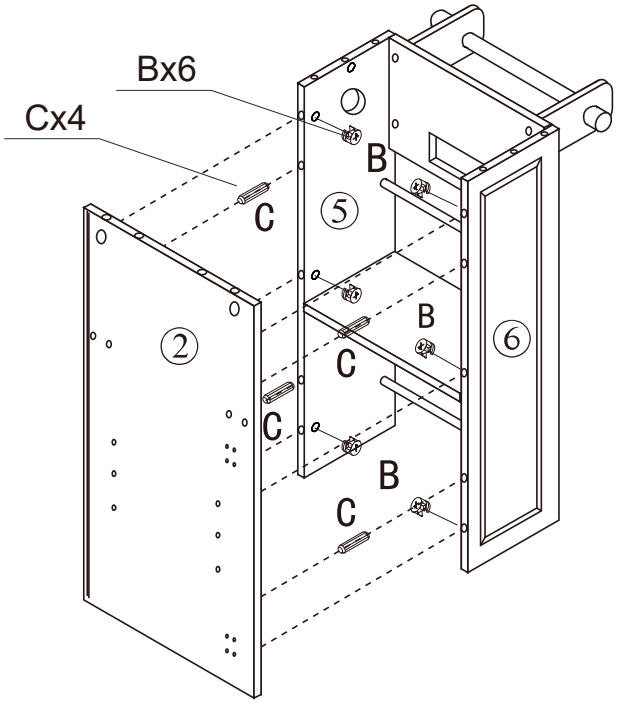

Fix Hardware A *6

Ax6	Bx6	Cx4
		

Attached Part （2） with pre-assembly Part(5)&(6)and fix them by B*6 and C*4.

4.

Attached Part （22）&(25)& (26) with Part（23）&(24) and fix them by B * 4.

Attached Part （16） with Part（23）&(24) and fix them by I * 4.

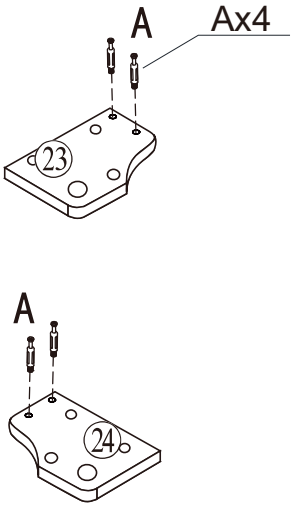

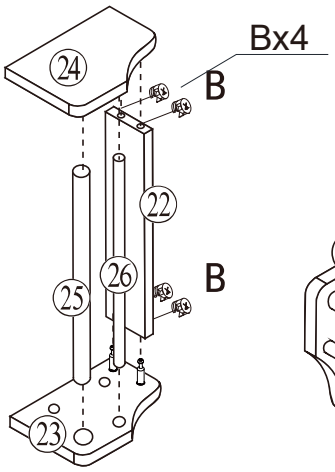

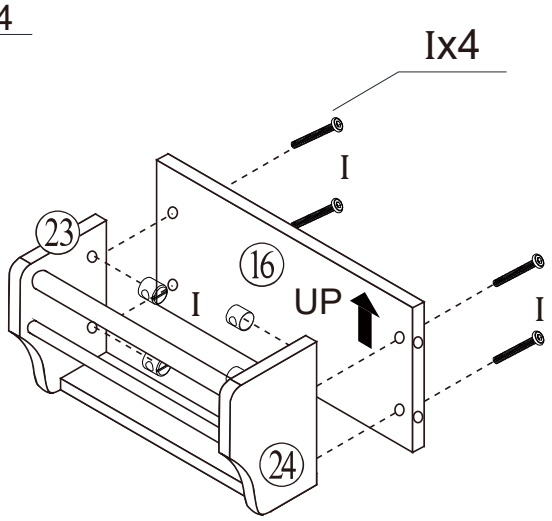

Fix Hardware A *4

Ax4	Bx4	I x4	Nx1
			

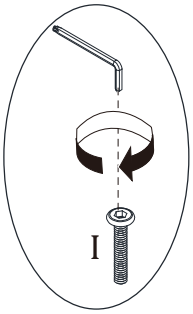

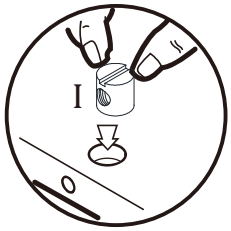

5.

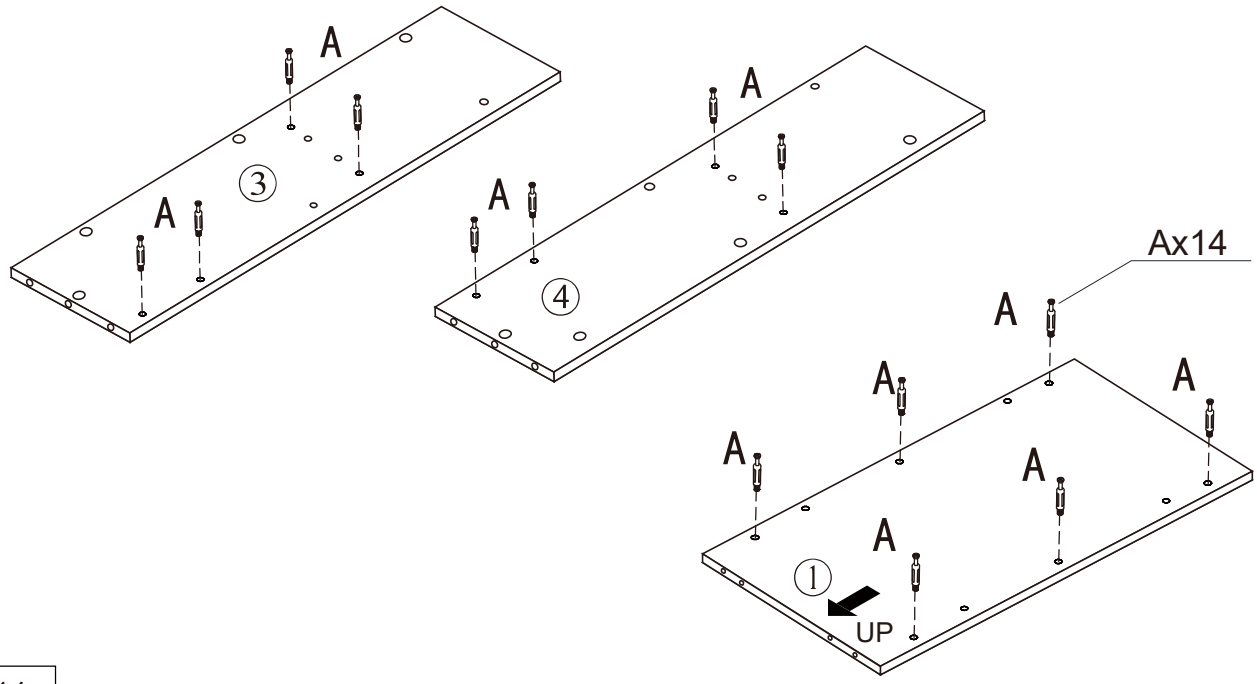

Ax14	Attached Hardware A with Part(3)(4)(1)

6.

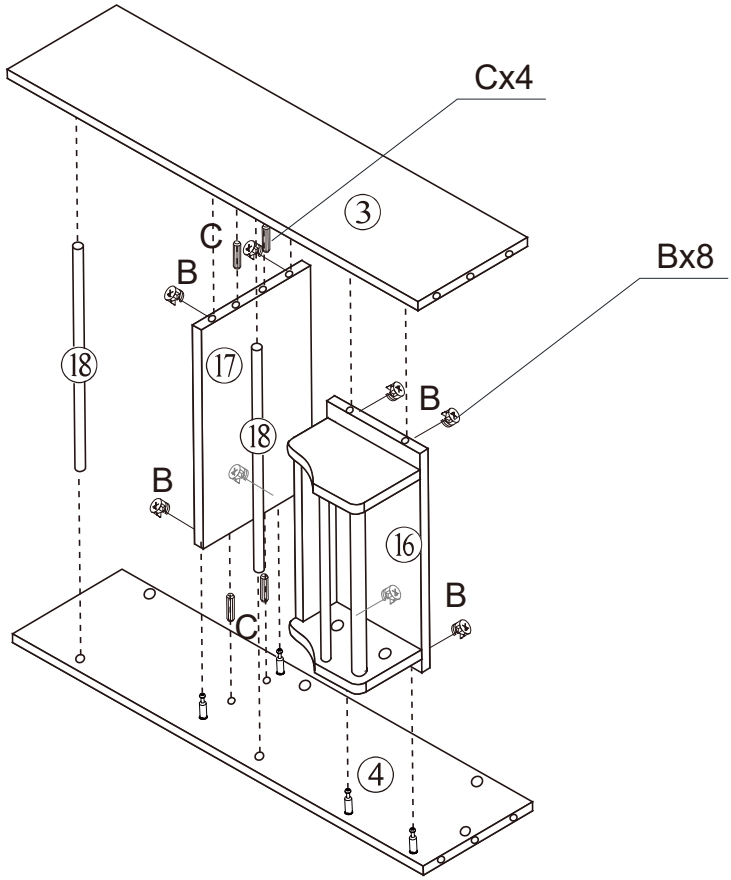

Bx8	Cx4	Attached Part （3）&(4) with pre-assembly Part(16)and Part(18)*2 &Part (17) and fix them by B*8 and C*4.

7.

Attached pre-assembly Part （3）&(4) with Part(1) and fix them by B*6 and C*4.

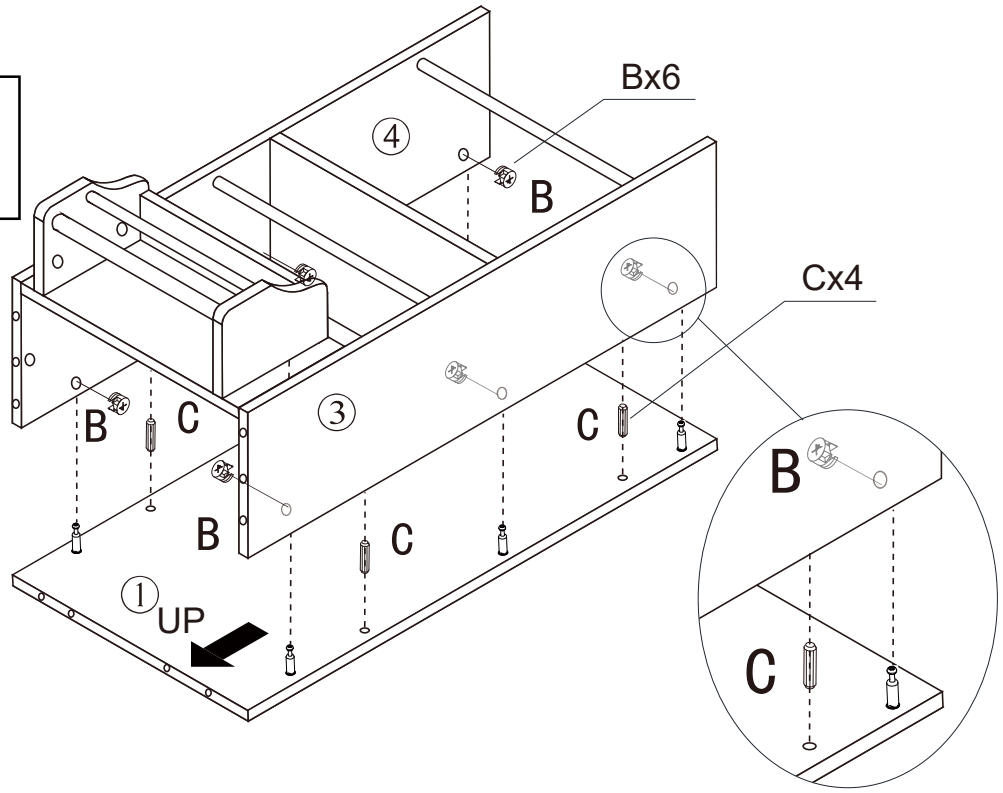

Bx6	Cx4
	

8.

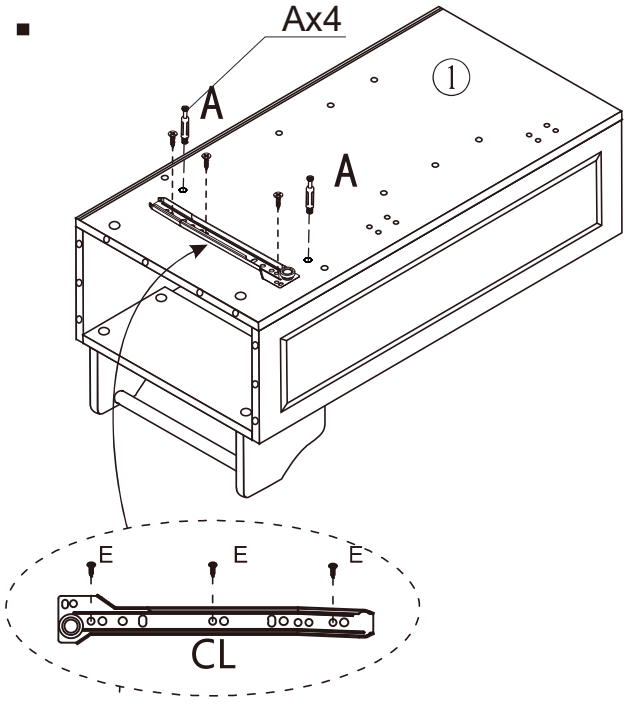

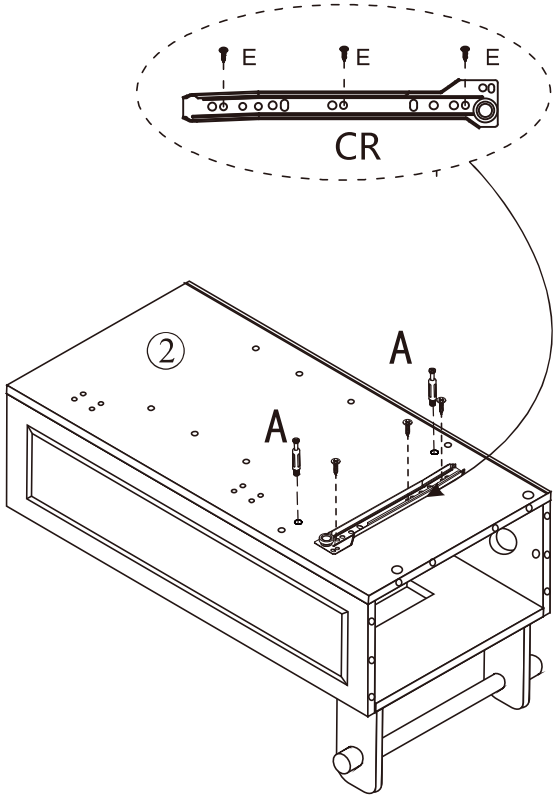

Attached Hardware CL with Part (1) and fix it by Hardware E*3.
Attached Hardware CR with Part (2) and fix it by Hardware E*3.
Attached Hardware A*2 with Part(1)(2)

Ax4	Ex6	CL x1	CR x1
			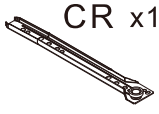

9.

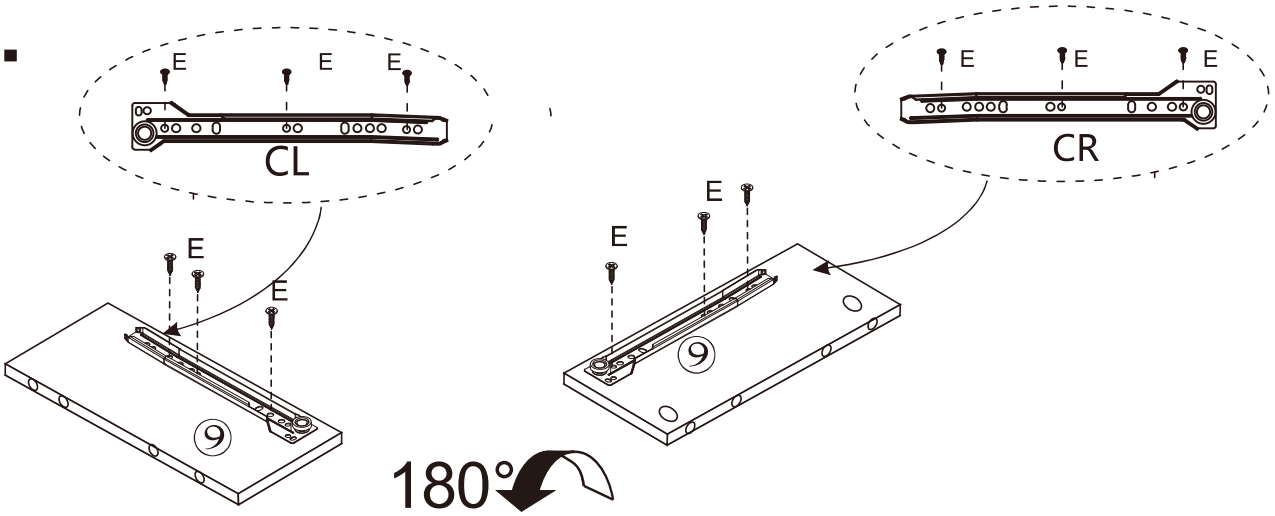

Ex6	CL x1	CR x1

Attached Hardware CL with Part (9) and fix it by Hardware E*3.
Flip this Pannel 180°
Attached Hardware CR with Part (9) and fix it by Hardware E*3.

10.

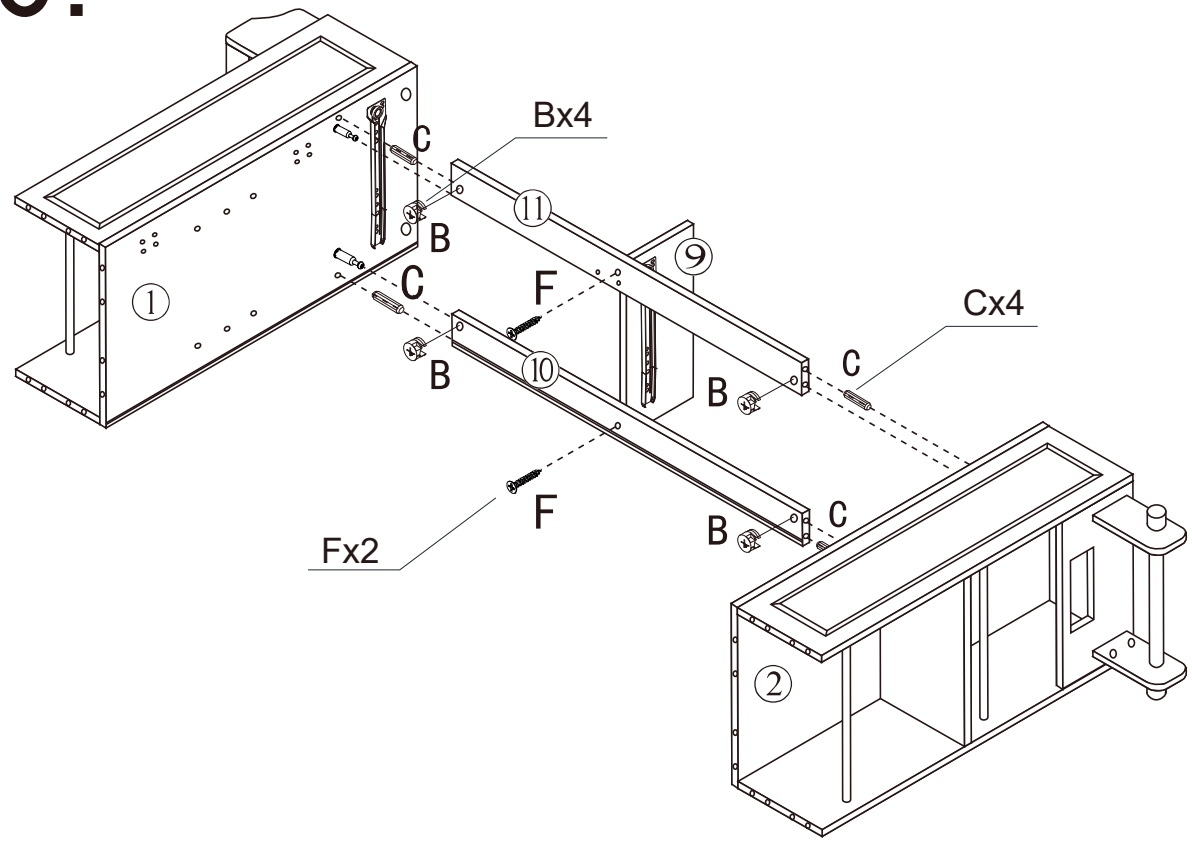

Bx4	Cx4	Fx2

Attached pre-assembly Part (1)&(2) with Part(10)&(9)&(1) and fix them by Hardware B*4 C*4 and F*2.

11.

Attached Part (15)&(40) with Part (2)&(1).

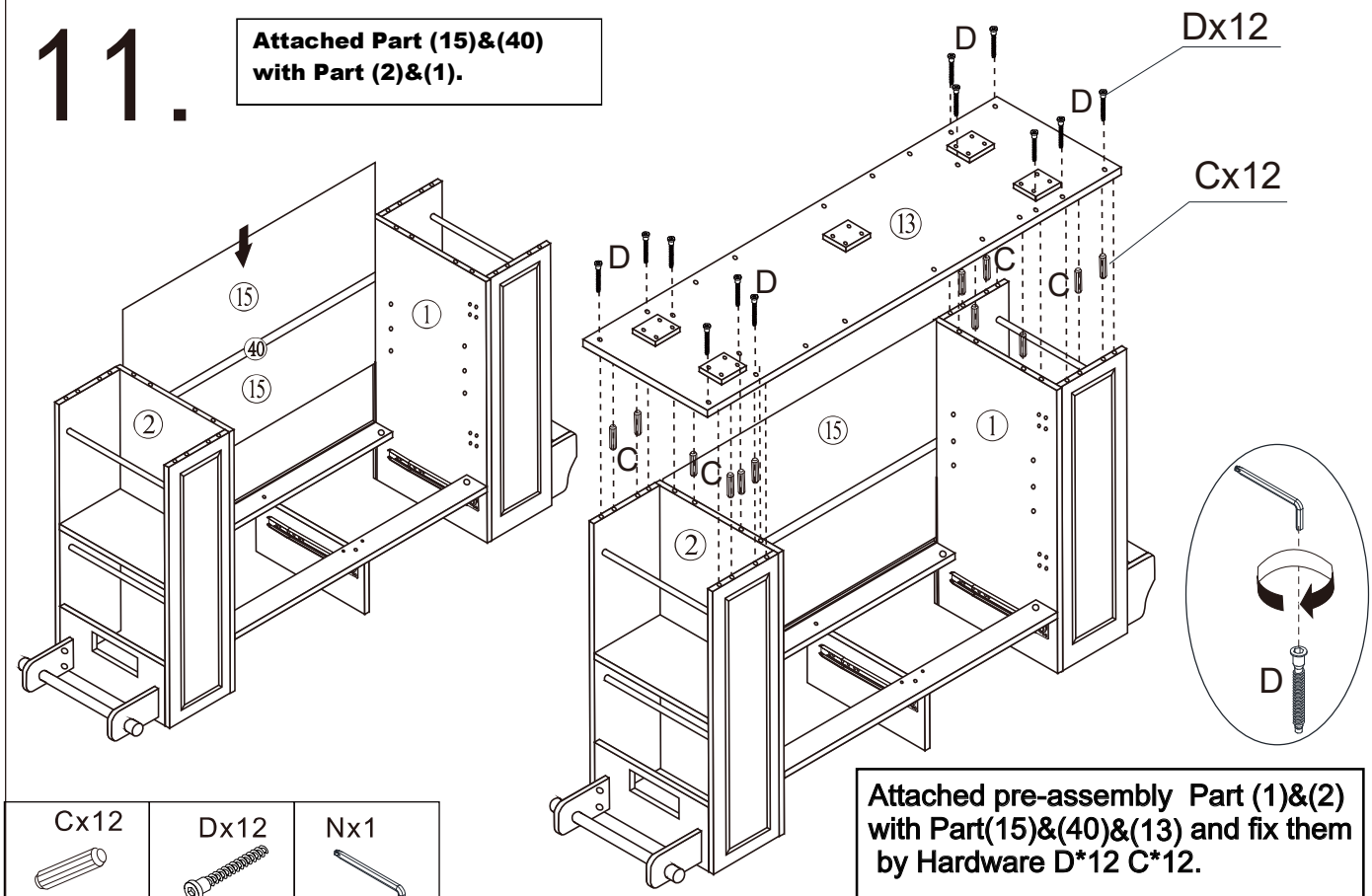

Cx12	Dx12	Nx1

Attached pre-assembly Part (1)&(2) with Part(15)&(40)&(13) and fix them by Hardware D*12 C*12.

12.

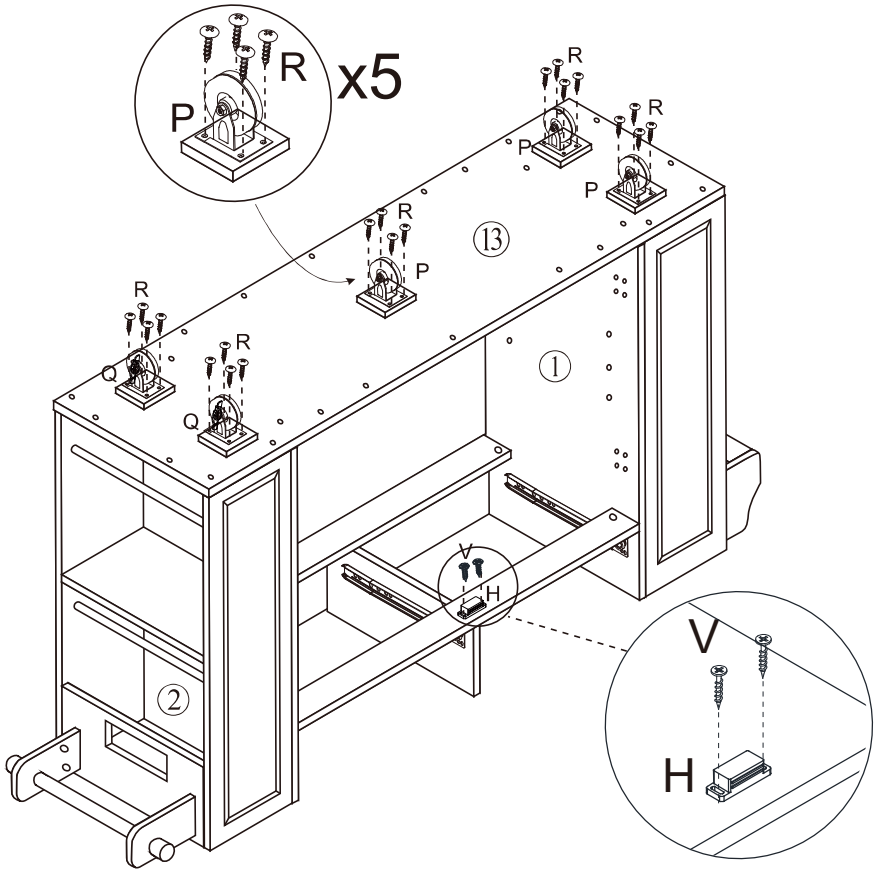

Px3	Qx2	Rx20	Hx1	Vx2

Attached Hardware P&Q by Hardware R*20.
Attached Hardware H by Hardware V*2.

13.

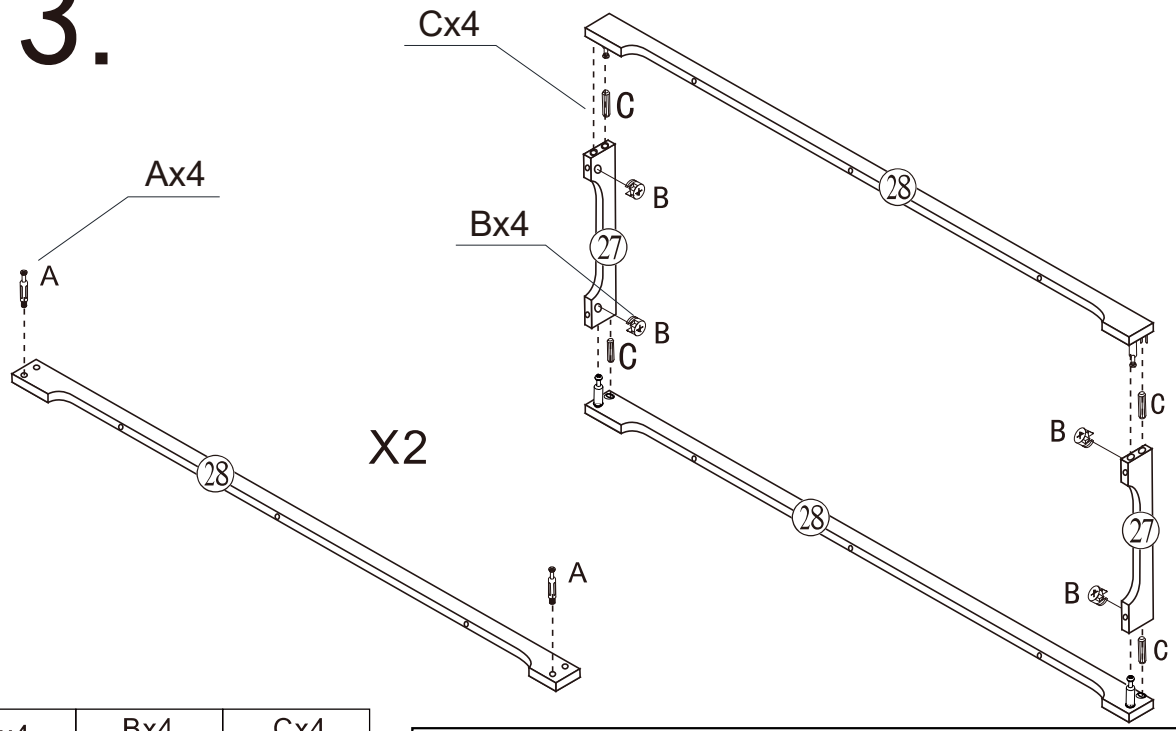

Ax4	Bx4	Cx4

Attached Hardware A with Part(28)*2.
Attached Part （28)*2 with Part(27)*2 and fix them by B*4 and C*4.

14.

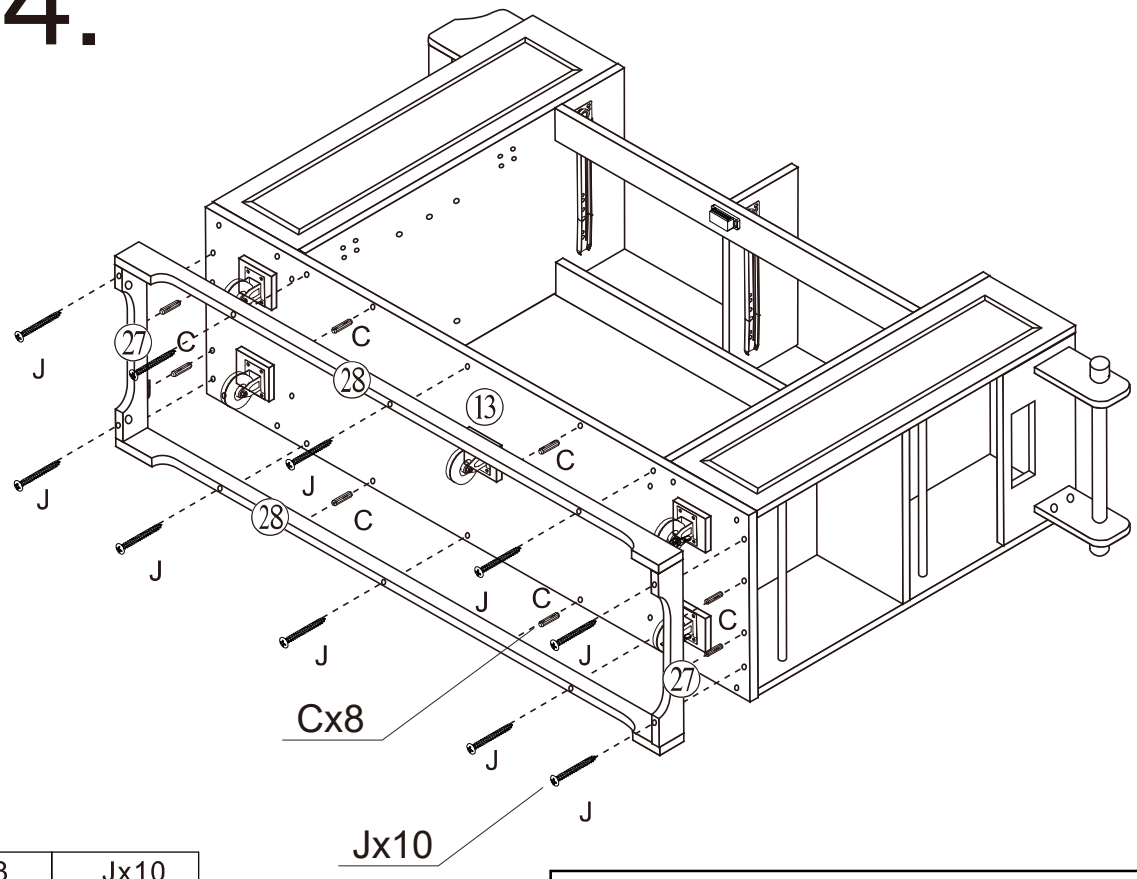

Cx8	Jx10

Attached pre-assembly Part （27）&(28) with Part（13） and fix them byHardware C*8J*10.

15.

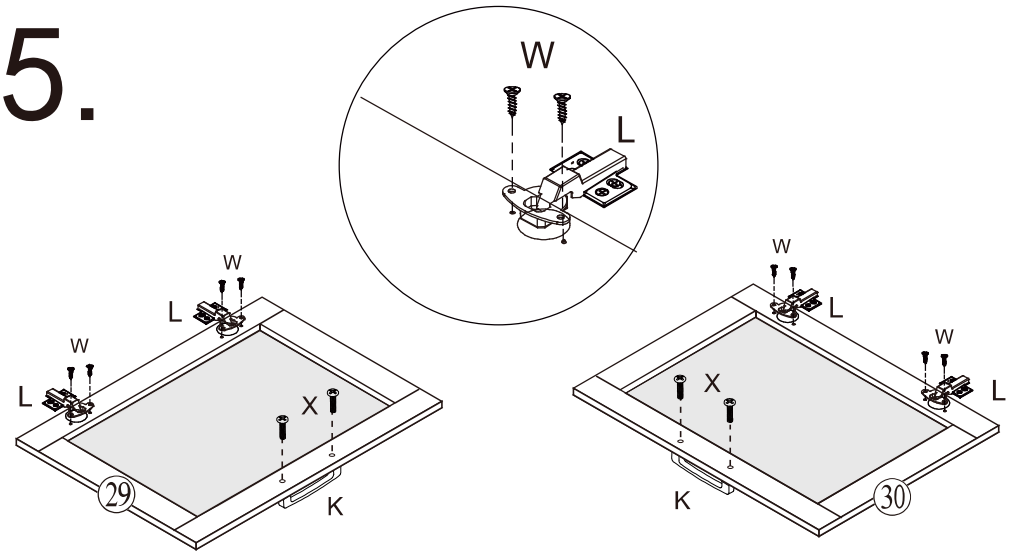

Attached Hard L*4 with Part (29)&(30) and fix them by Hardware W*8.
Attached Hard K*2 with Part (29)&(30)and fix them by Hardware X*4.

Wx8	Kx2	Xx4	Lx4

16.

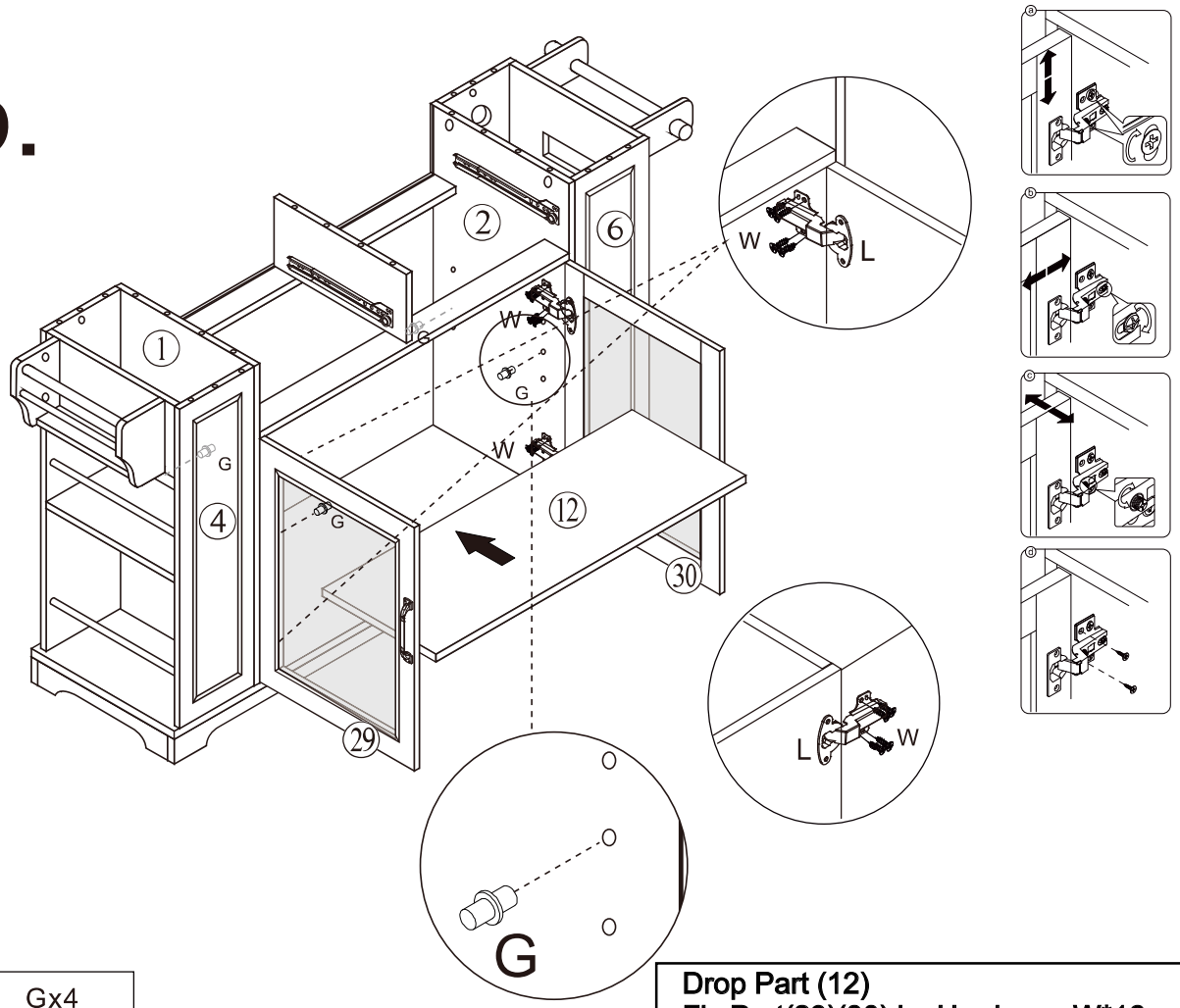

Drop Part (12)
Fix Part(29)(30) by Hardware W*16
Fix Hardware G*2.

Wx16	Gx4

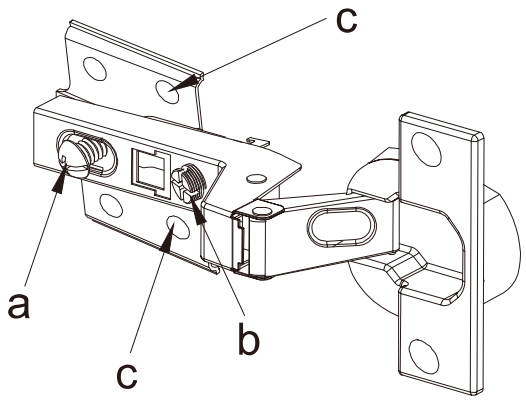

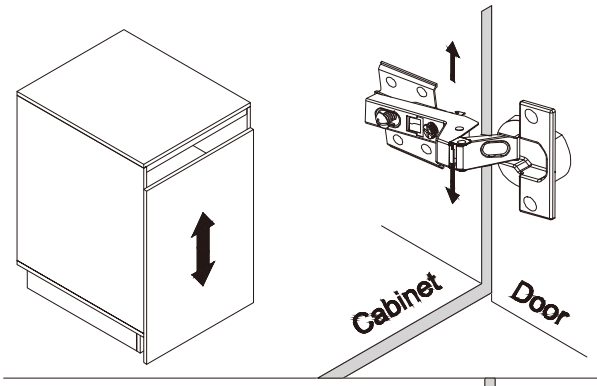

To adjust the vertical height.

Loosen the four screws "c" on both hinges.Two of them are usually in slotted holes which allows you to adjust up or down by a few mm.Then tighten back up.

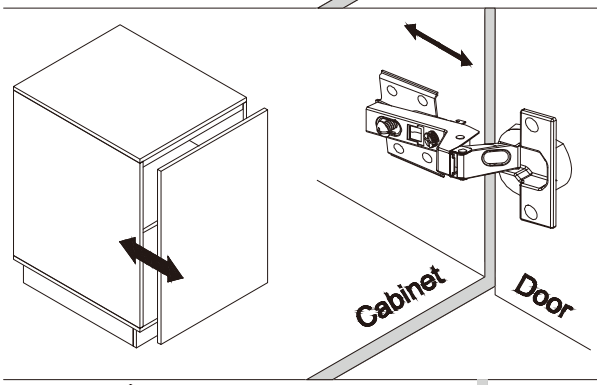

To adjust depth.

Loosen screw "a" and adjust door,if the door can not be adjusted,please loosen screw "b" ,then try again. Tighten screw "a" and "b" .

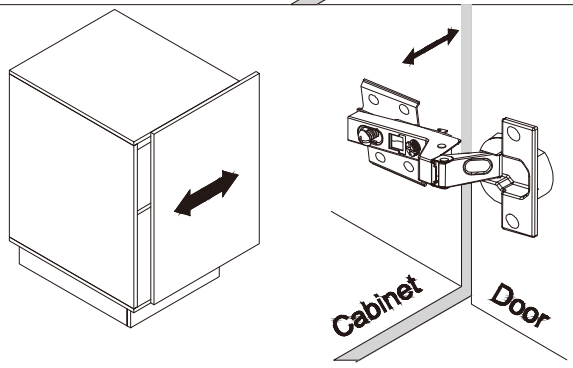

To adjust side ways.

Turning the screw "b" on BOTH hinges on each door.

17.

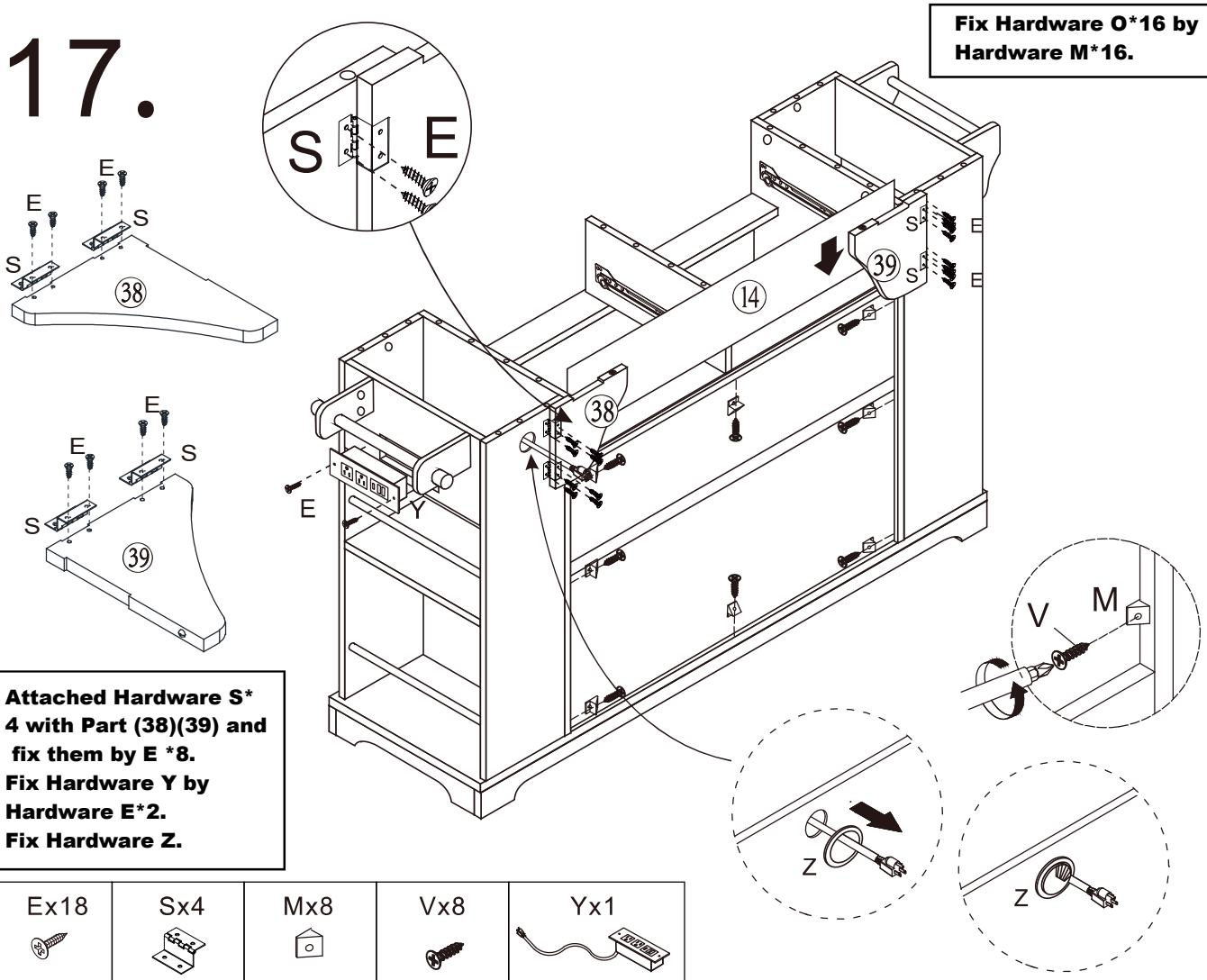

Fix Hardware O*16 by Hardware M*16.

Attached Hardware S* 4 with Part (38)(39) and fix them by E *8.
Fix Hardware Y by Hardware E*2.
Fix Hardware Z.

Ex18	Sx4	Mx8	Vx8	Yx1

18.

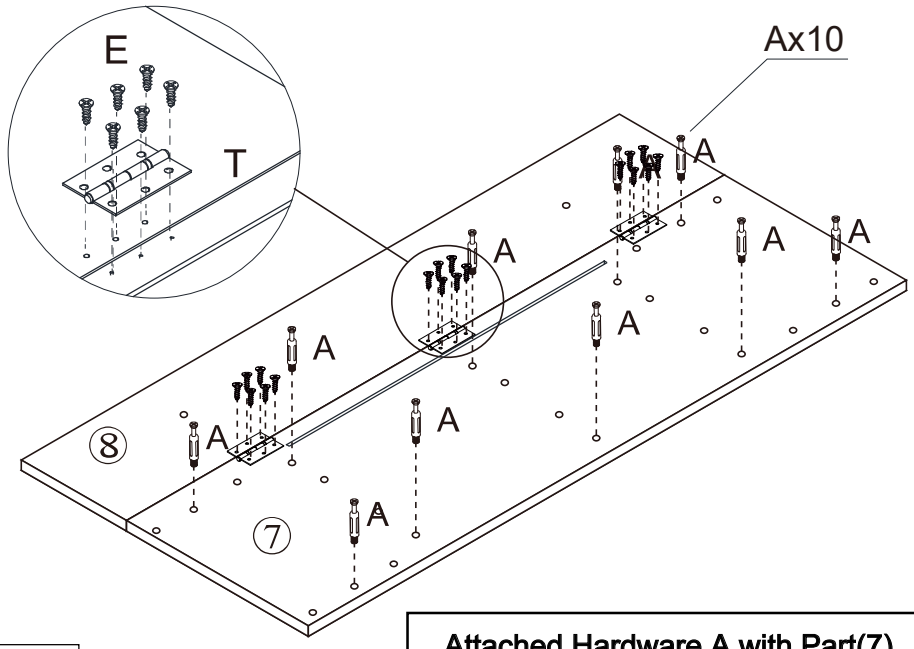

Attached Hardware A with Part(7)
Fix Part(7)(8) by Hardware T*3 E*18.

Ax10	Ex18	Tx3
		

19.

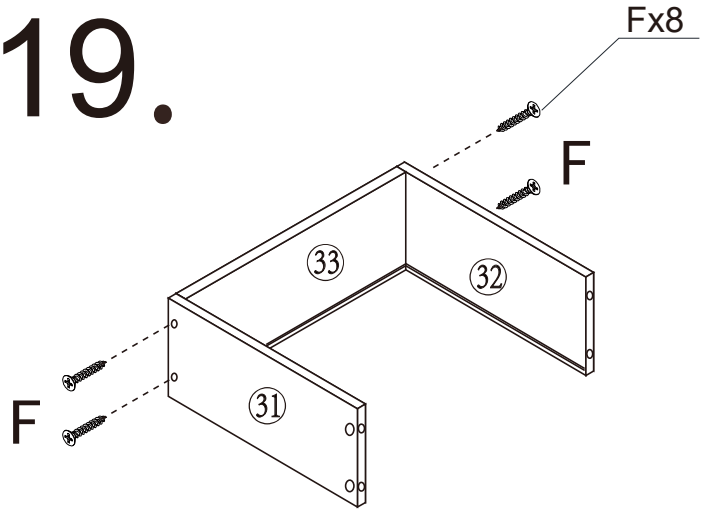

Attached Part (31)&(32) with Part (33),fix by Harware F*8, Then,insert Part (34)

X2

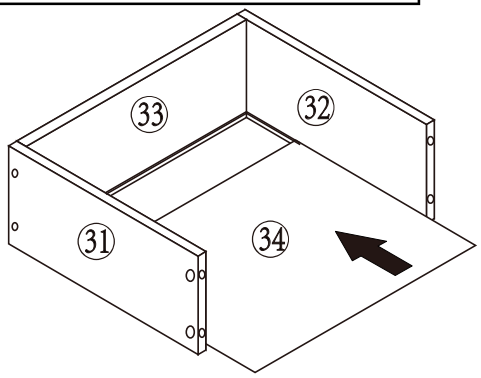

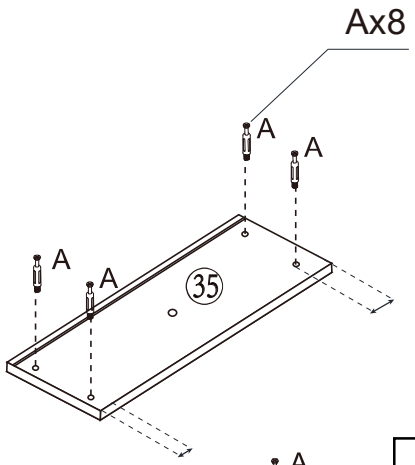

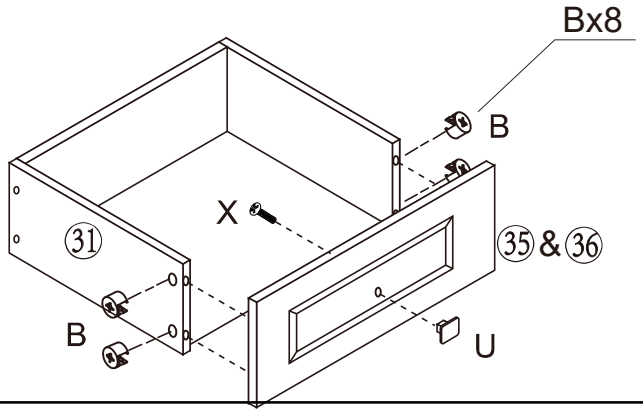

Attached pre-assembly Part(31)(32) with Part (1)&(2)fix them by Hardware B*8 .
Attached Hardware U and fix it by Hardware X.

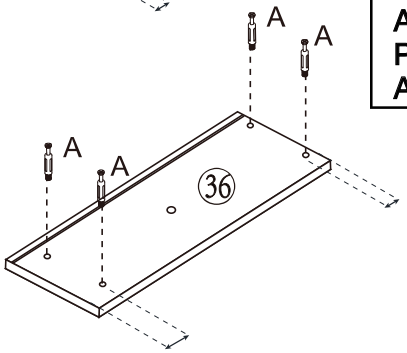

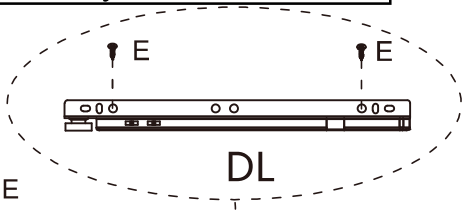

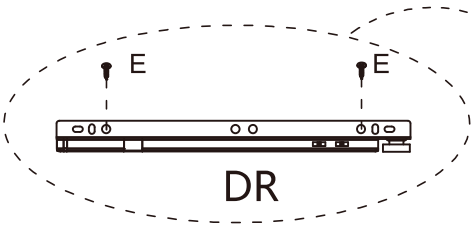

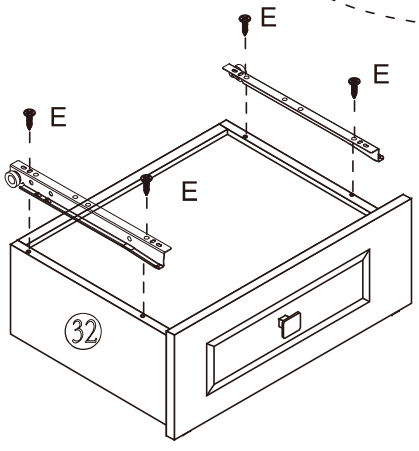

Attached Hardware DR with Part (32) and fix it by Hardware E*2.
Attached Hardware DL with Part (31) and fix it by Hardware E*2.

Ax8	Bx8	Fx8	Ex8	Ux2	Xx4	DR x2	DL x2
							

20.

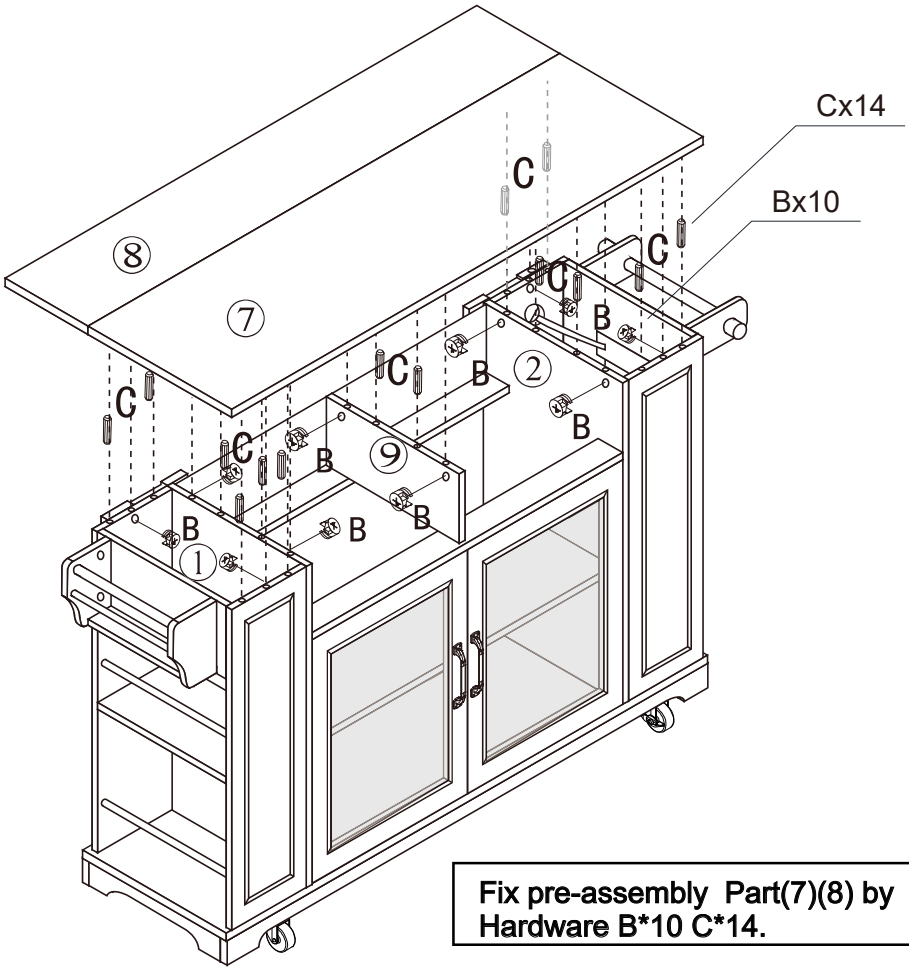

Bx10	Cx14
	

Fix pre-assembly Part(7)(8) by Hardware B*10 C*14.

21.

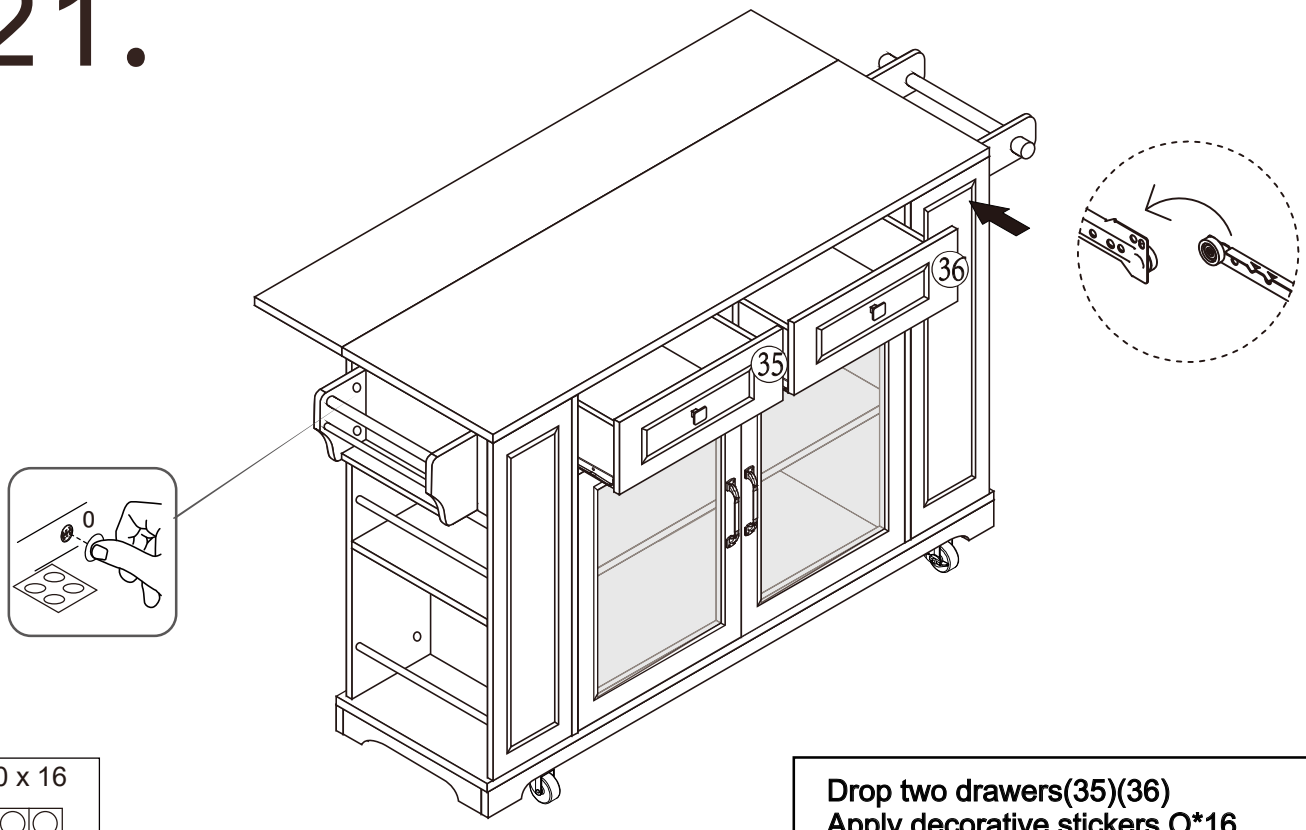

0 x 16


Drop two drawers(35)(36)
Apply decorative stickers O*16

22.

