36*80 inch Hidden Barn Door Installation Manual

YCM12-36x80IN+HD

Any question please contact us:
support@jubest.com

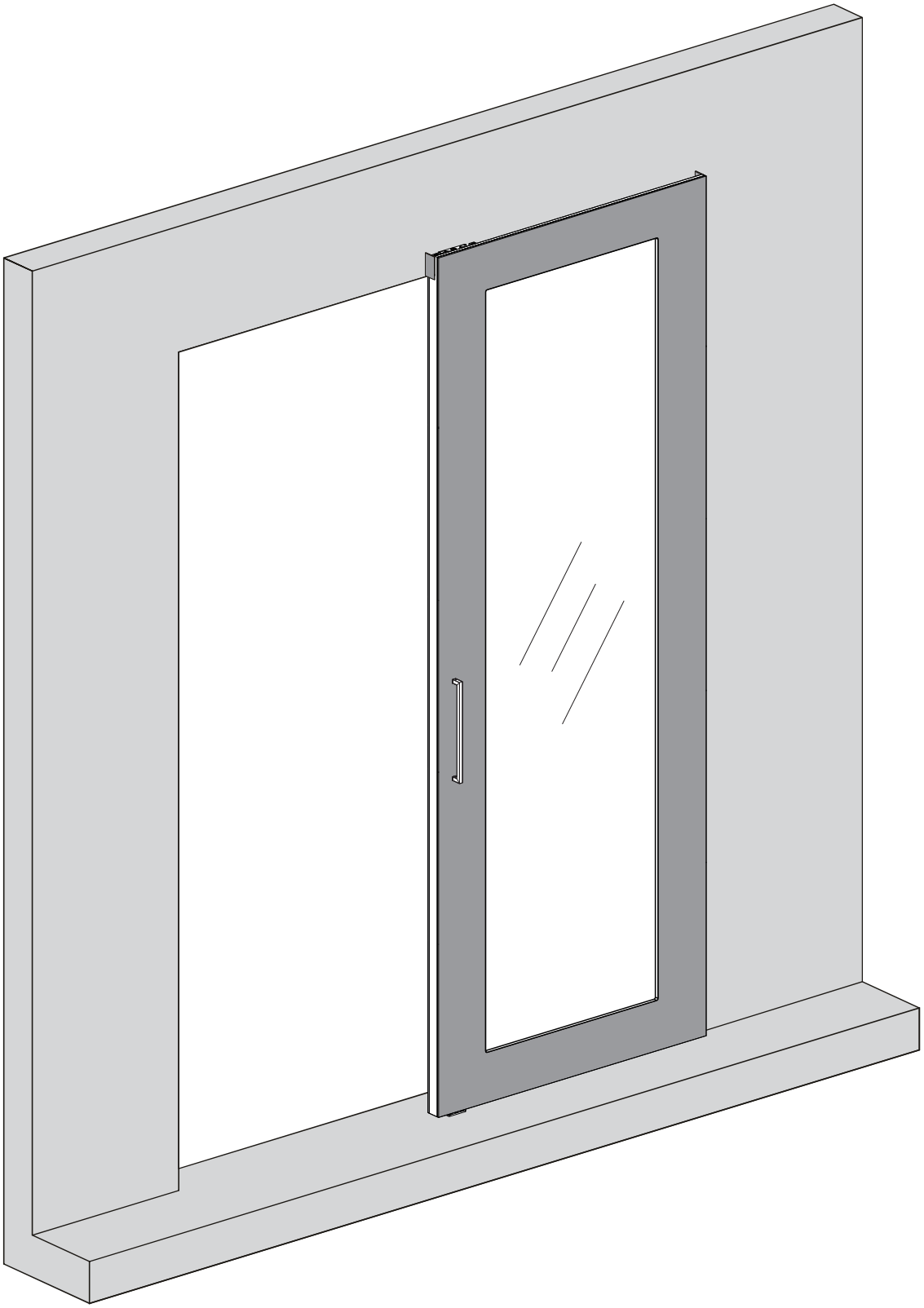

TOOLS REQUIRED

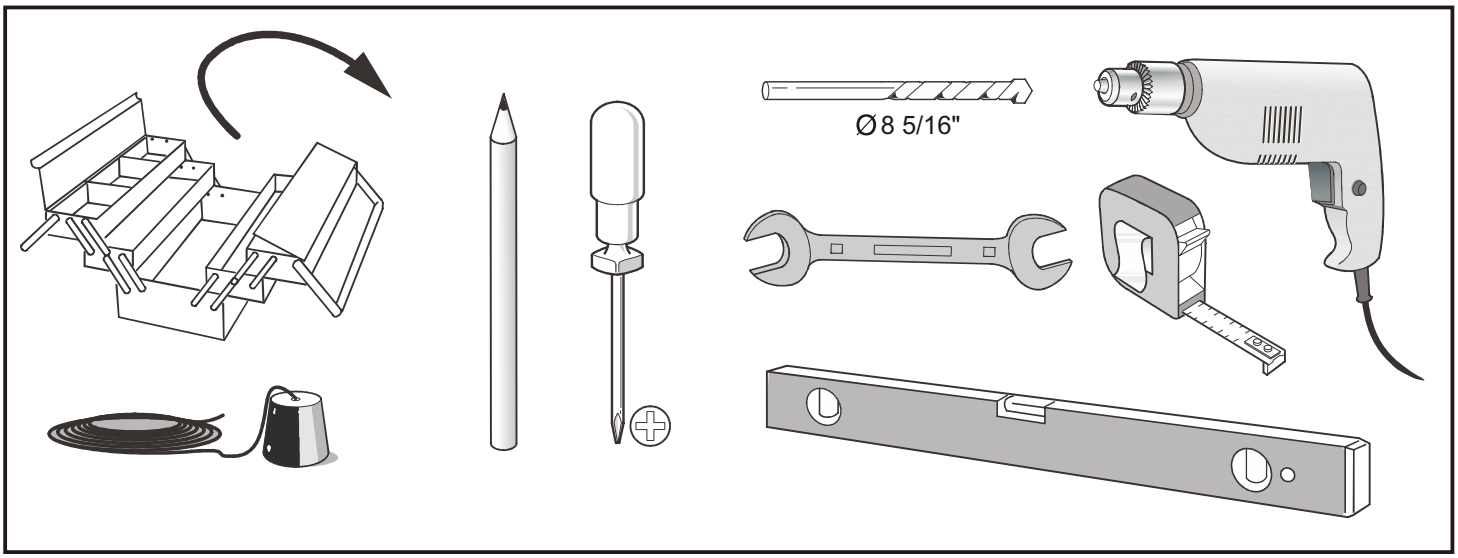

WHAT IS IN THE BOX

A Adjustable top roller

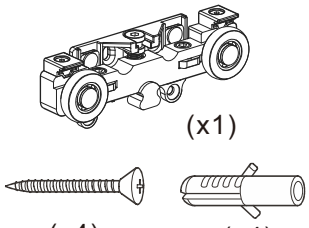

(x1)

(x4)
ST 11/64"x1 31/32"
(4.2mmx50mm)

(x4)
Ø5/16"
(8mm)

B Soft close kits

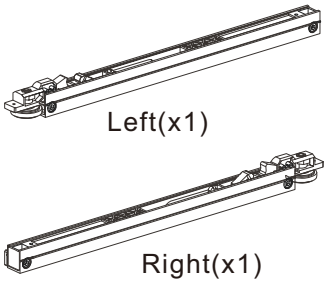

Left(x1)

Right(x1)

C Sliding track

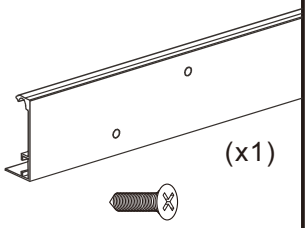

(x1)

(x9)
ST 9/64"x33/64"
(3.5mmx13mm)

D End caps for track

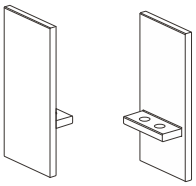

(x1) (x1)

(x2)
ST 7/64"x3/8"
(2. 9mmx9. 5mm)

E Bottom roller

(x2)

(x4)
ST 11/64"x63/64"
(4.2mmx25mm)

F Bottom guide channel

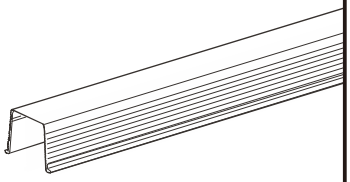

(x1)

G Floor mounted guide

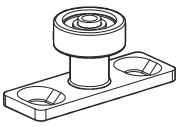

(x1)

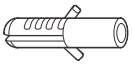

(x2)
ST 3/16"x1 1/2"
(4.8mmx38mm)

(x2)
Ø5/16"
(8mm)

H Flush pull

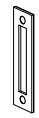

(x1)

(x1)

(x2)
ST 7/32"x63/64"
(5.5mmx25mm)

(x2)
ST 11/64"x1 1/4"
(4.2mmx31.7mm)

I Spacer

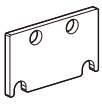

(x1)

J Door slab

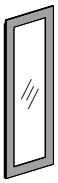

36"x80"
(914mmx2032mm)

(x1)

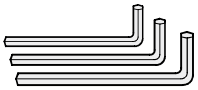

(x1)

Door opened position

Door closed position

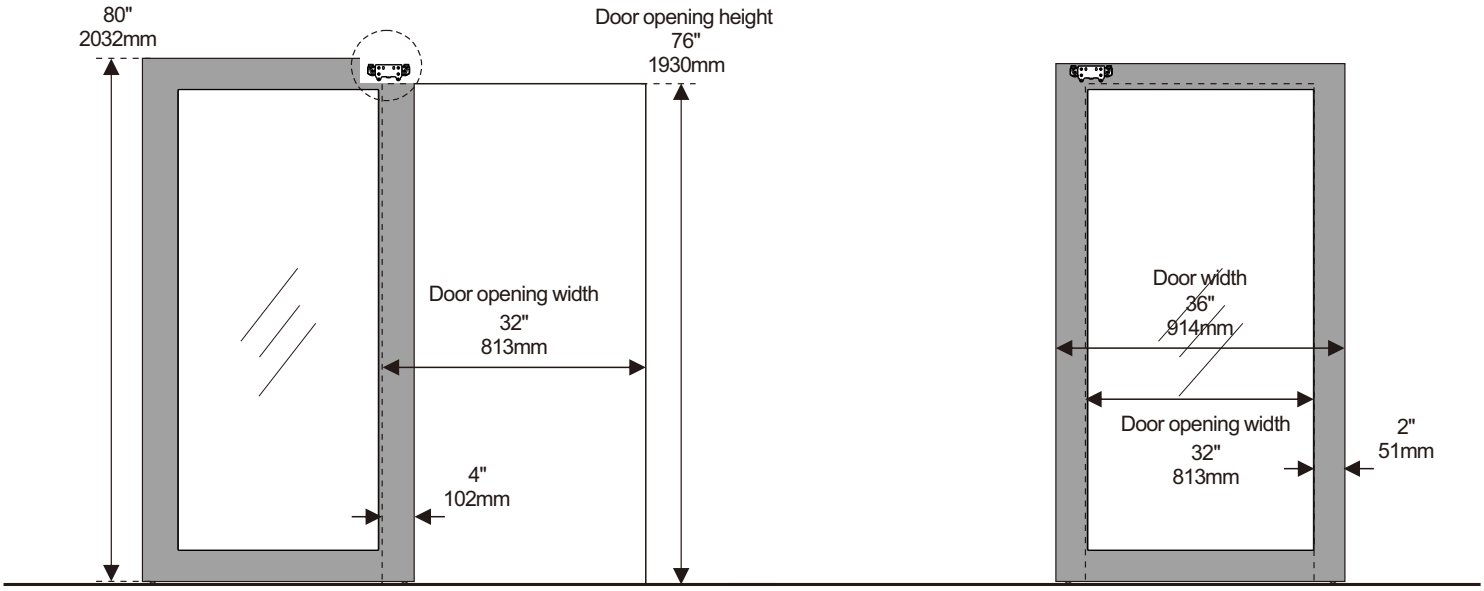

fits 32*76 or 34*76 inch door opening, please consult with us before installation if you have other sizes of door opening

Door opened position

Door closed position

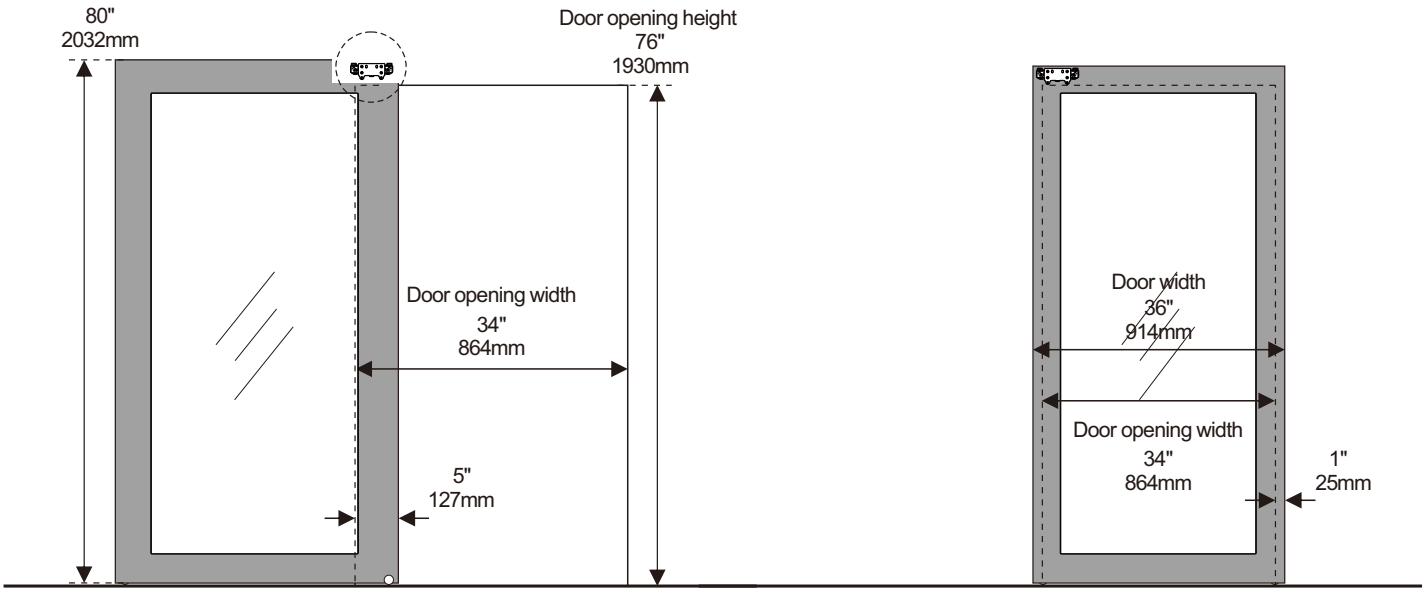

Section drawing

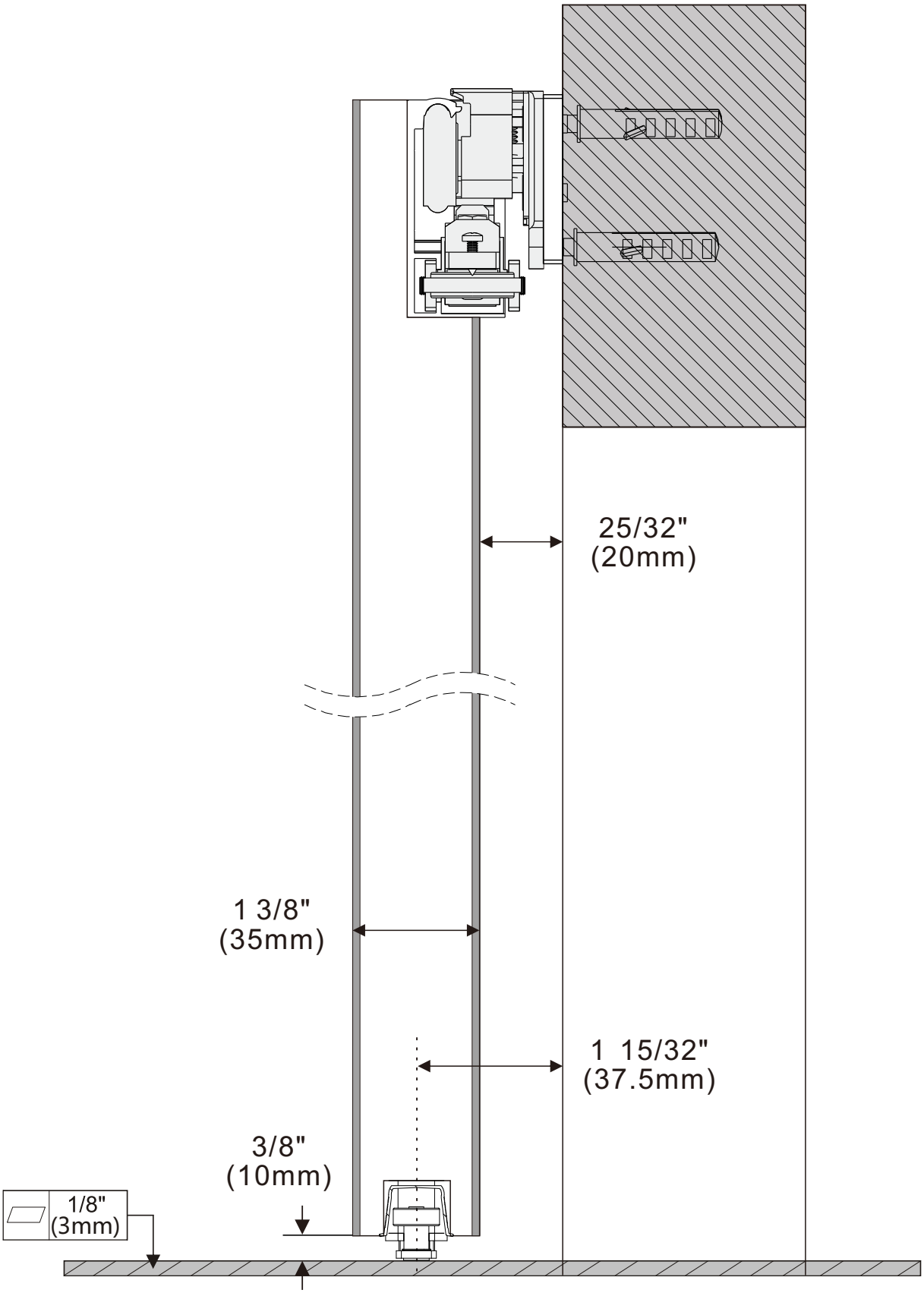

1 Mount aluminum track (C)on door (J)

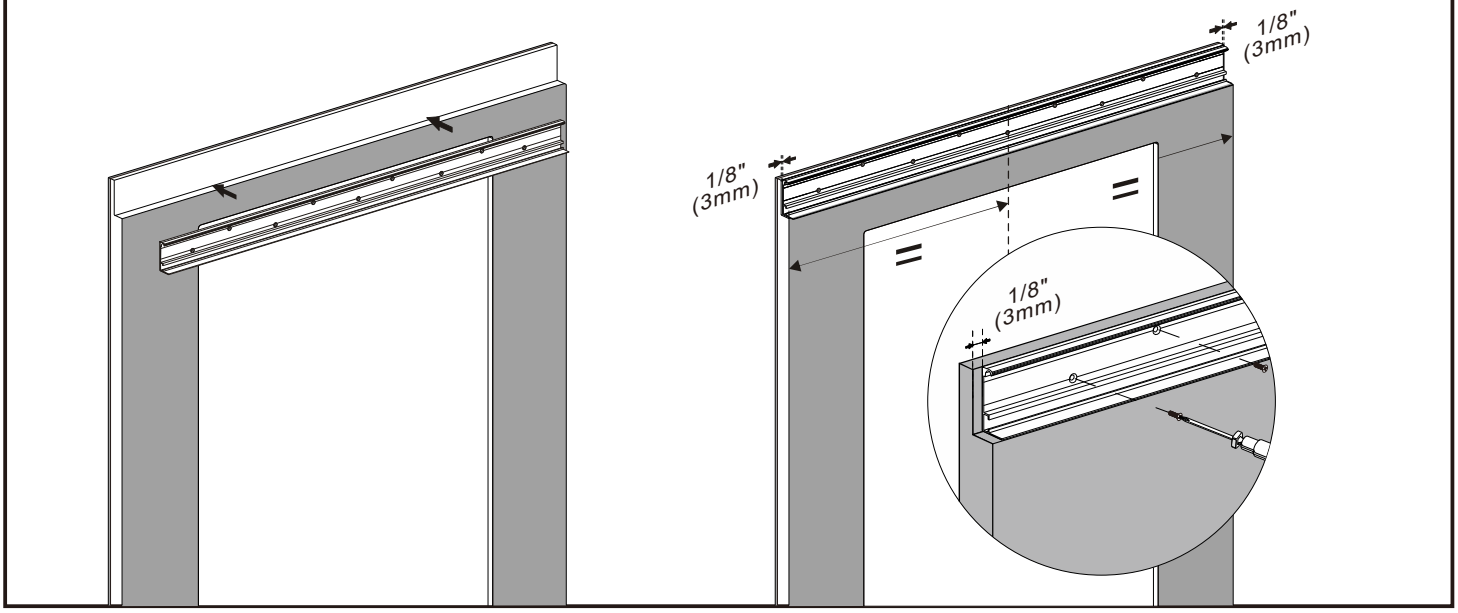

2 Mount soft close kits(B)

① Activate soft close devices by hand

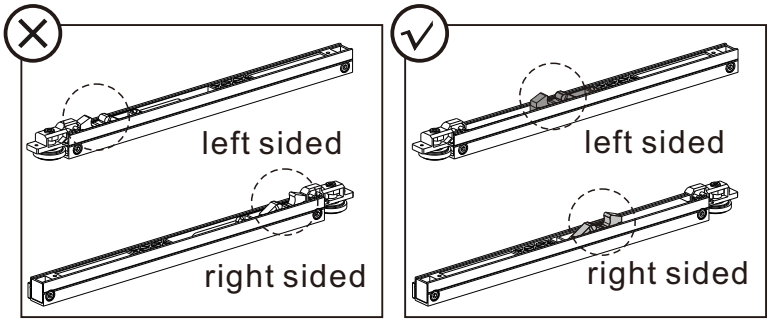

② Loosen screw on both ends of soft close device

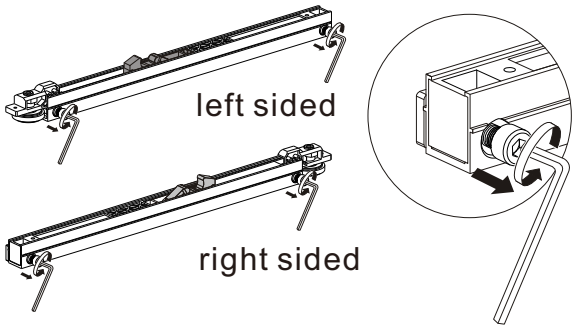

③ Slide both left sided and right sided soft close devices in the track(C)

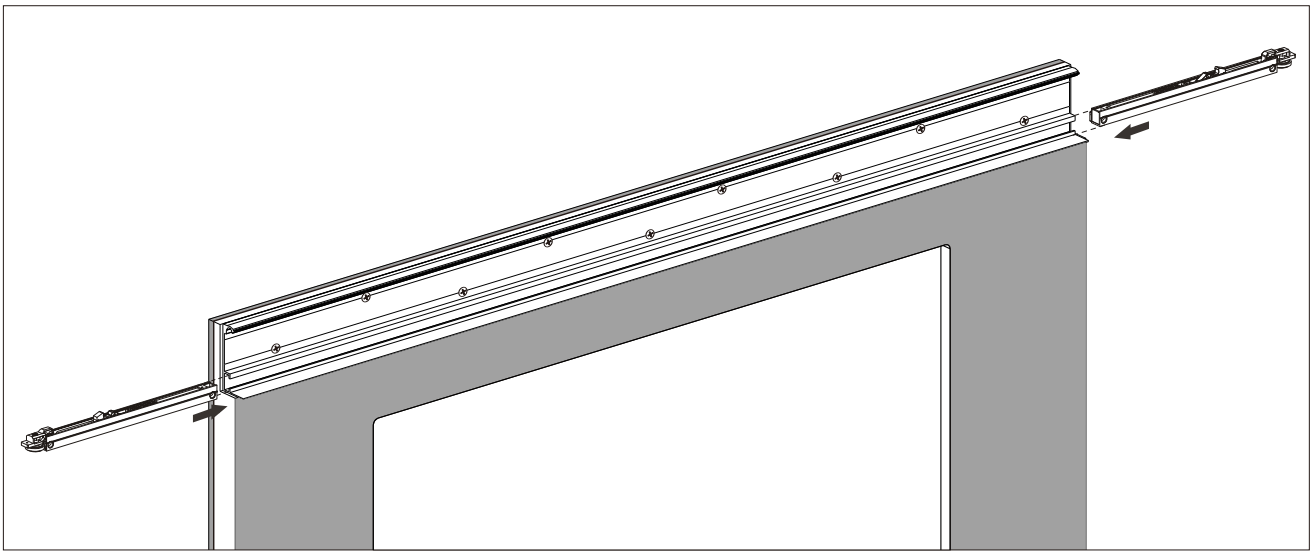

④ Ensure it is flush with the end of track(C) and fasten the screw

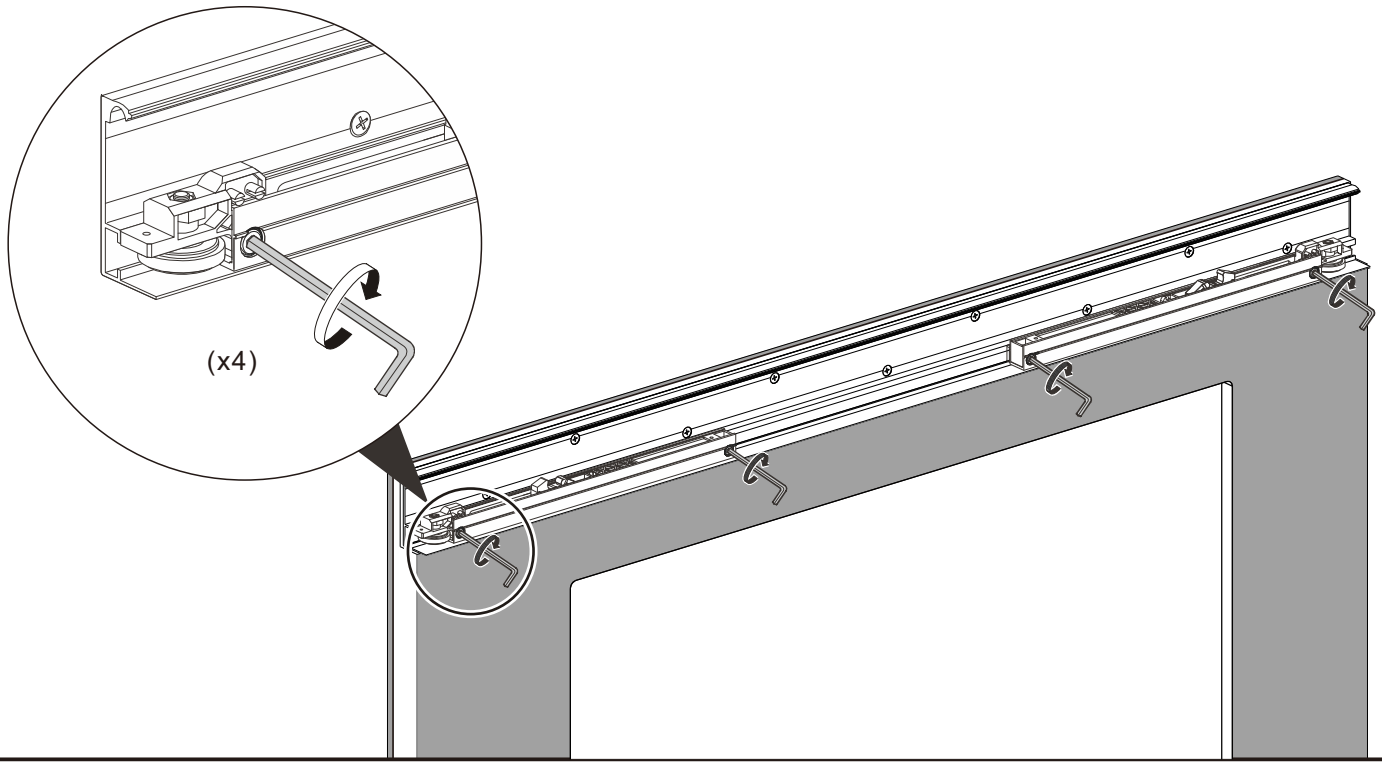

3 Fasten caps(D) onto both ends of track

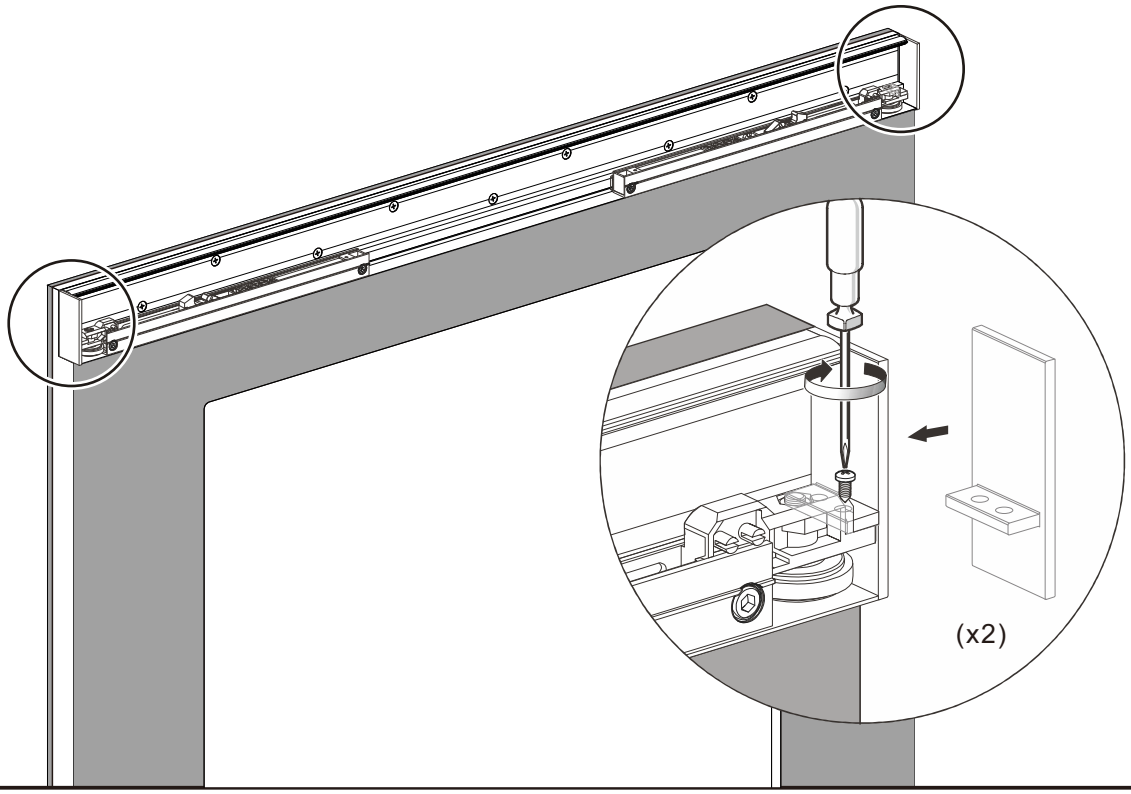

4 Install bottom roller(E) and guide channel(F) inside the slot of door slab(J)

① Remove the wheel from the case

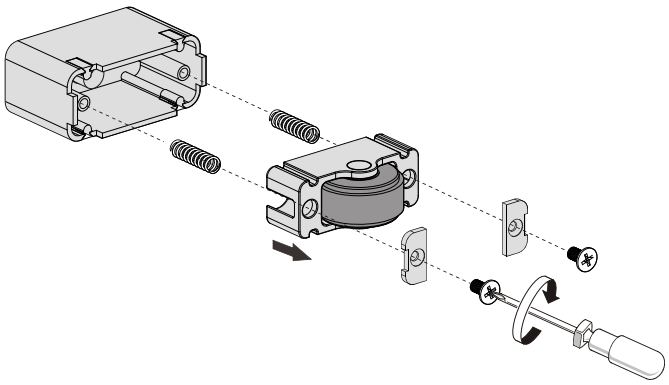

② Fasten bottom roller case inside the bottom of door slab

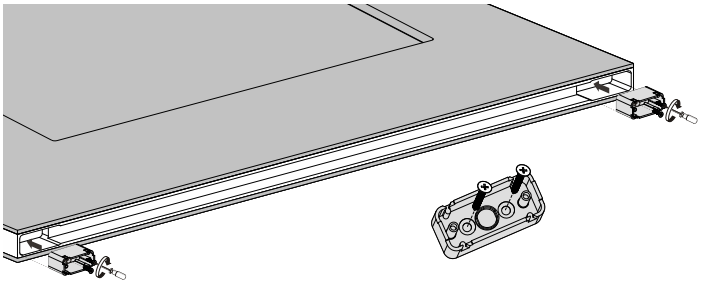

③ Fasten the wheel inside the case

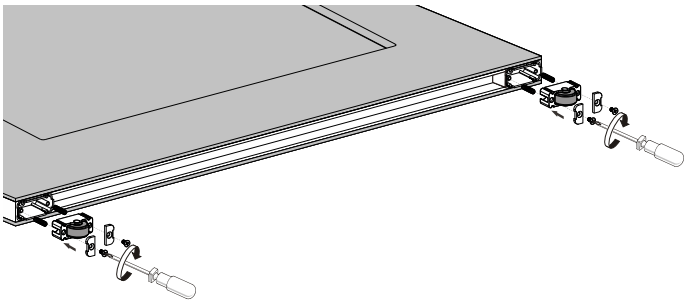

④ Press fit guide channel inside the slot

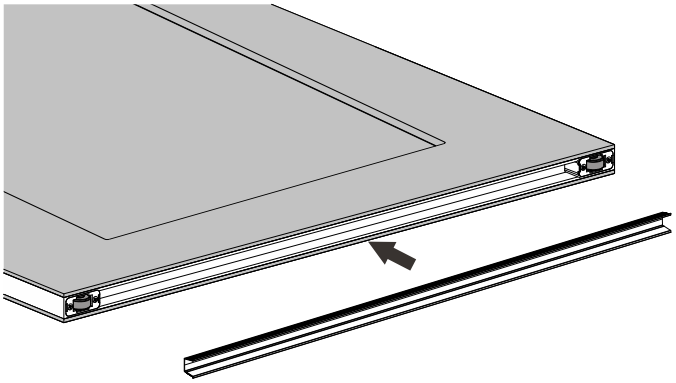

5 Mount adjustable top roller(A) and mount floor guide(G)
NOTE: top roller assembly must be installed into wall blocking.

Door opening size:32x76"

① Loose the screw and remove anti-jump block

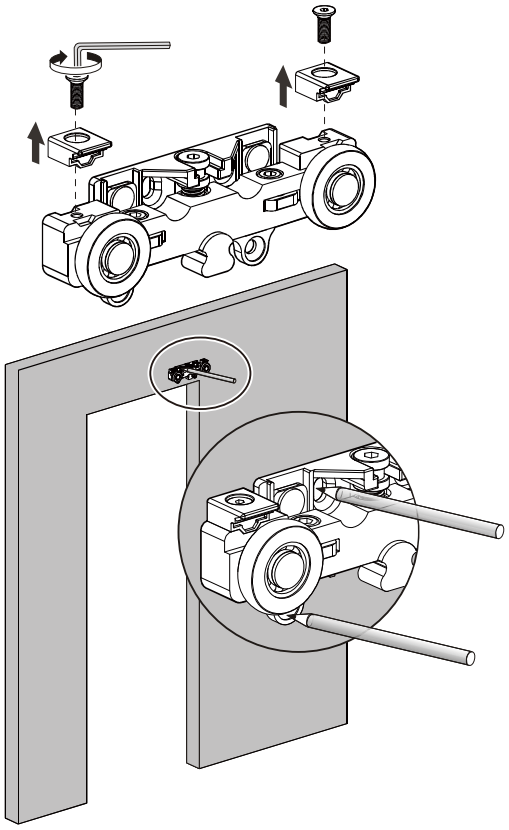

② Fasten the top roller onto wall through spacer(I)

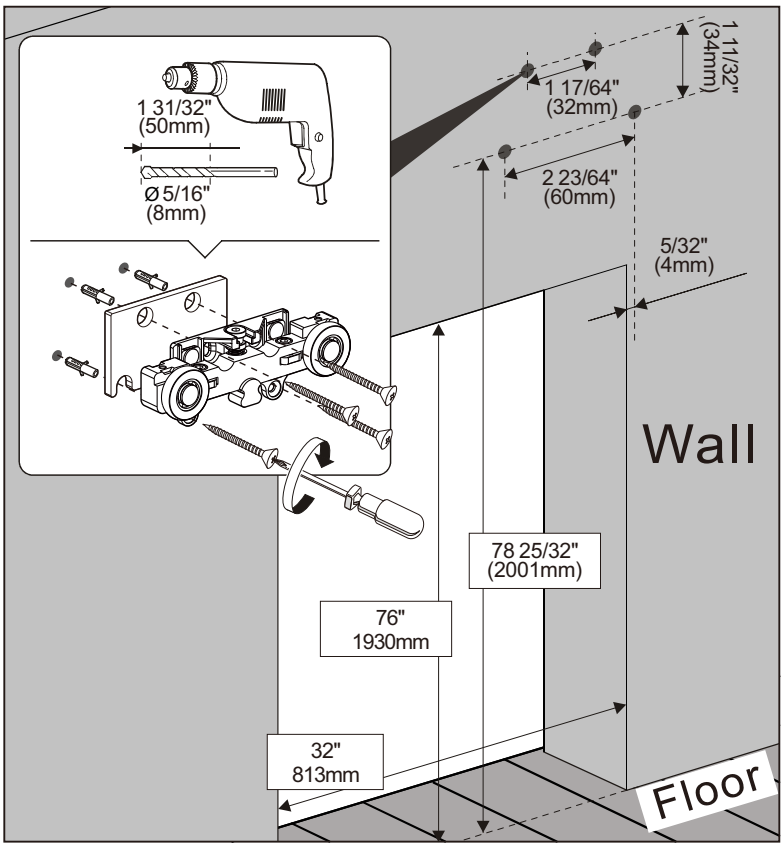

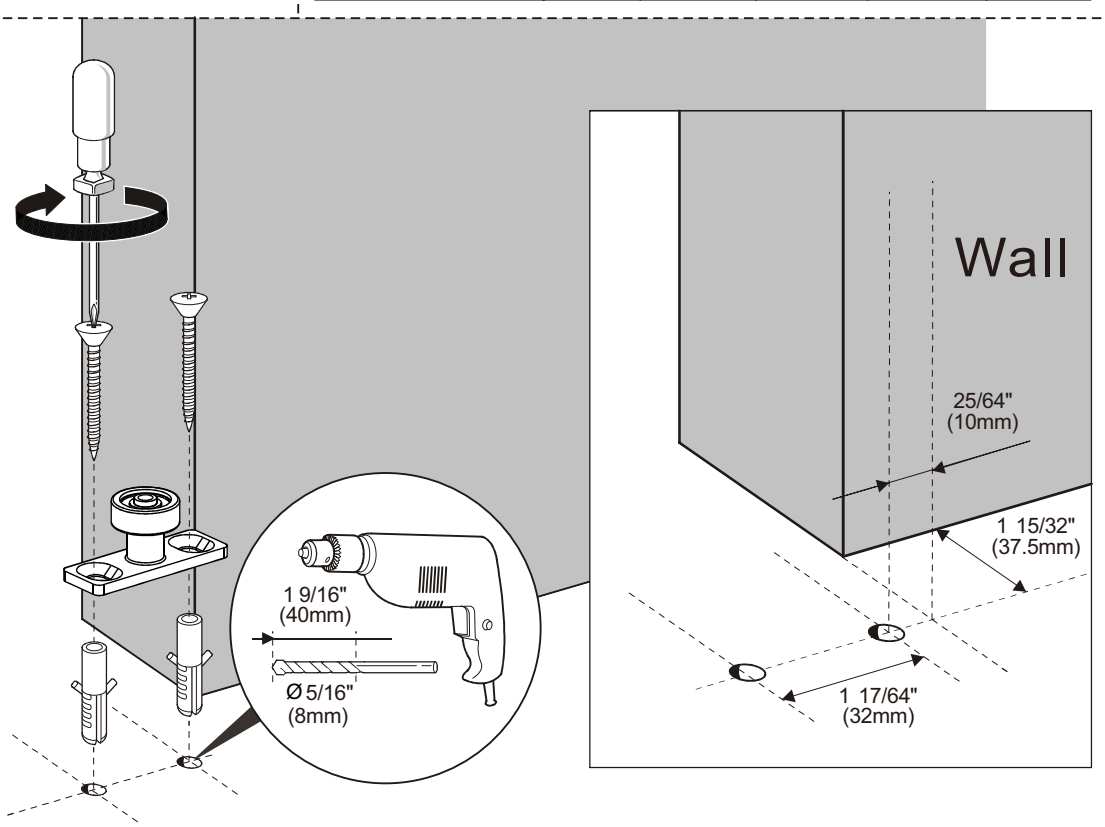

5 Mount adjustable top roller(A) and mount floor guide(G)
NOTE: top roller assembly must be installed into wall blocking.

Door opening size:34x76"

① Loose the screw and remove anti-jump block

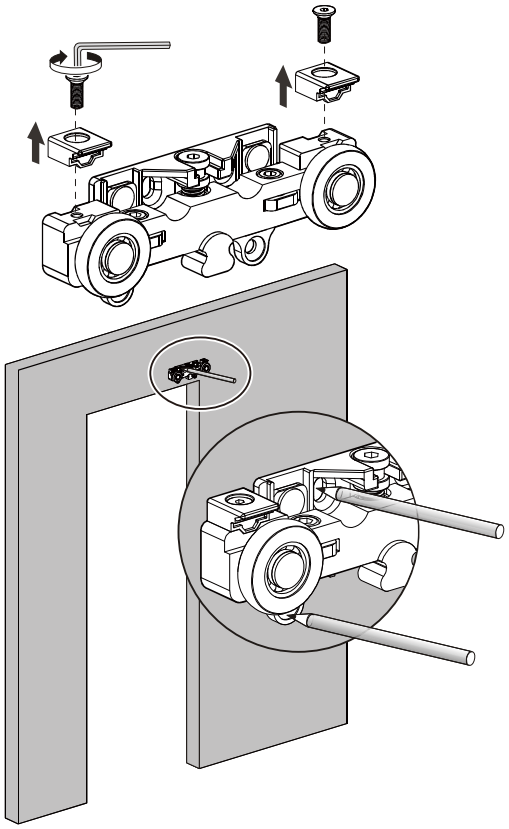

② Fasten the top roller onto wall through spacer(I)

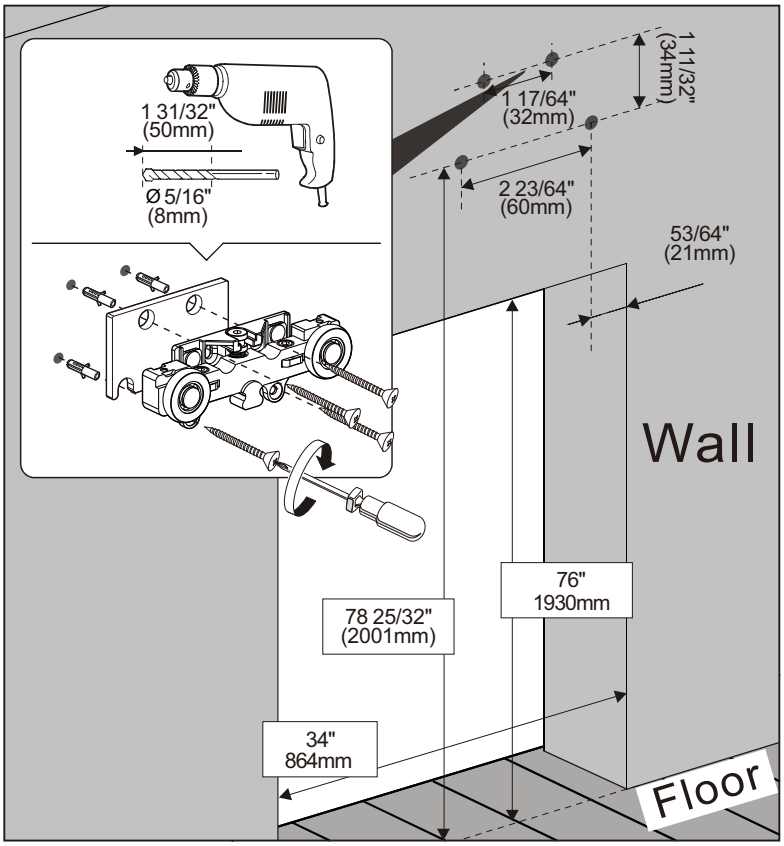

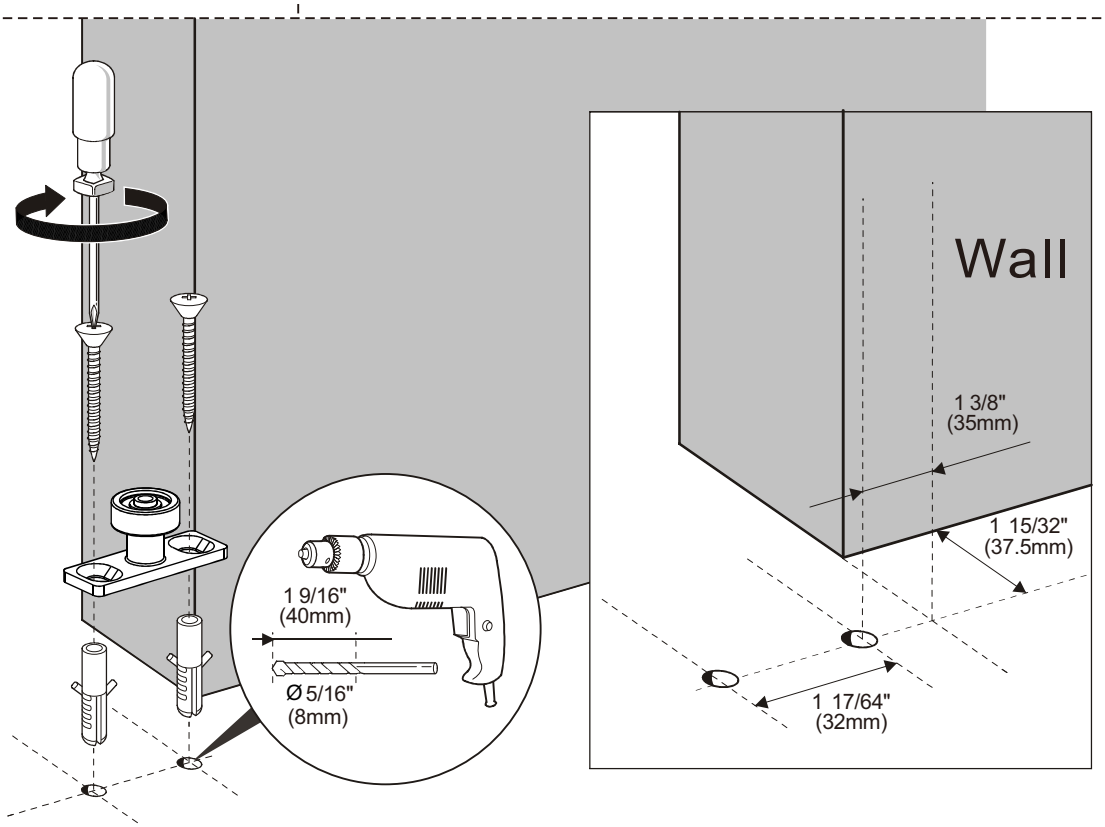

6 Install door slab(J) onto top track(C) and slide the door slab to ensure top roller(A) is at the center of track(C) horizontally

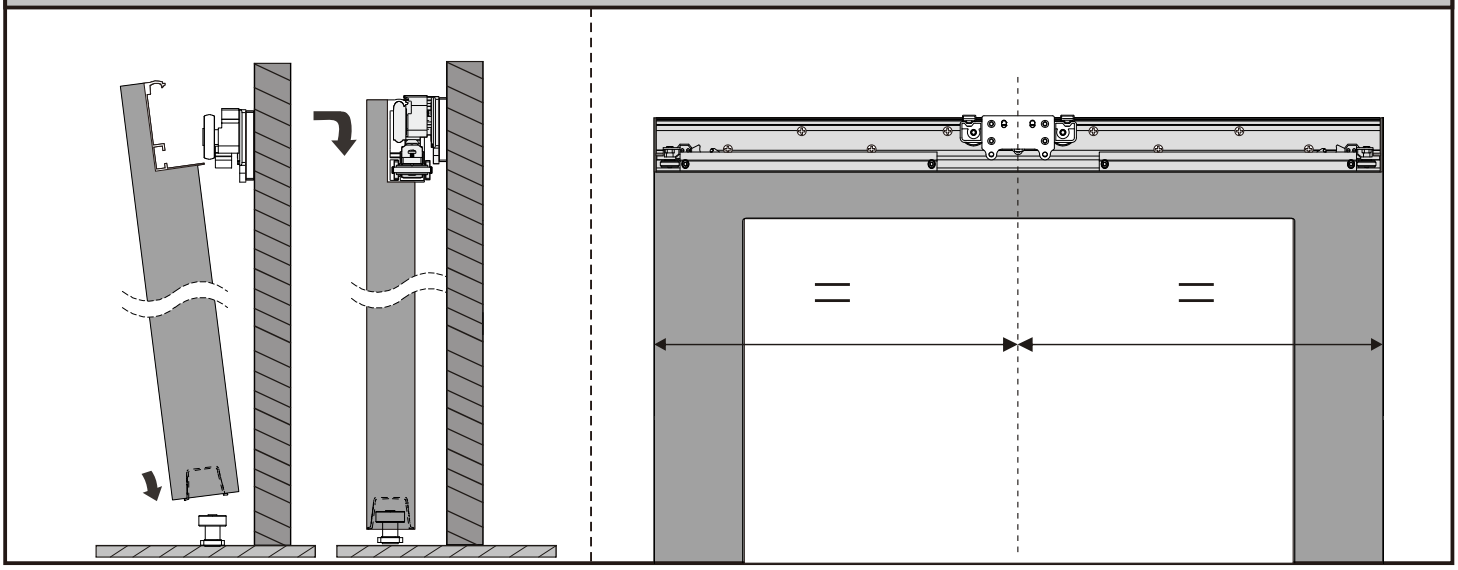

7 Fasten the screw to adjust the hanger height to ensure wheel touches the upper inside of track

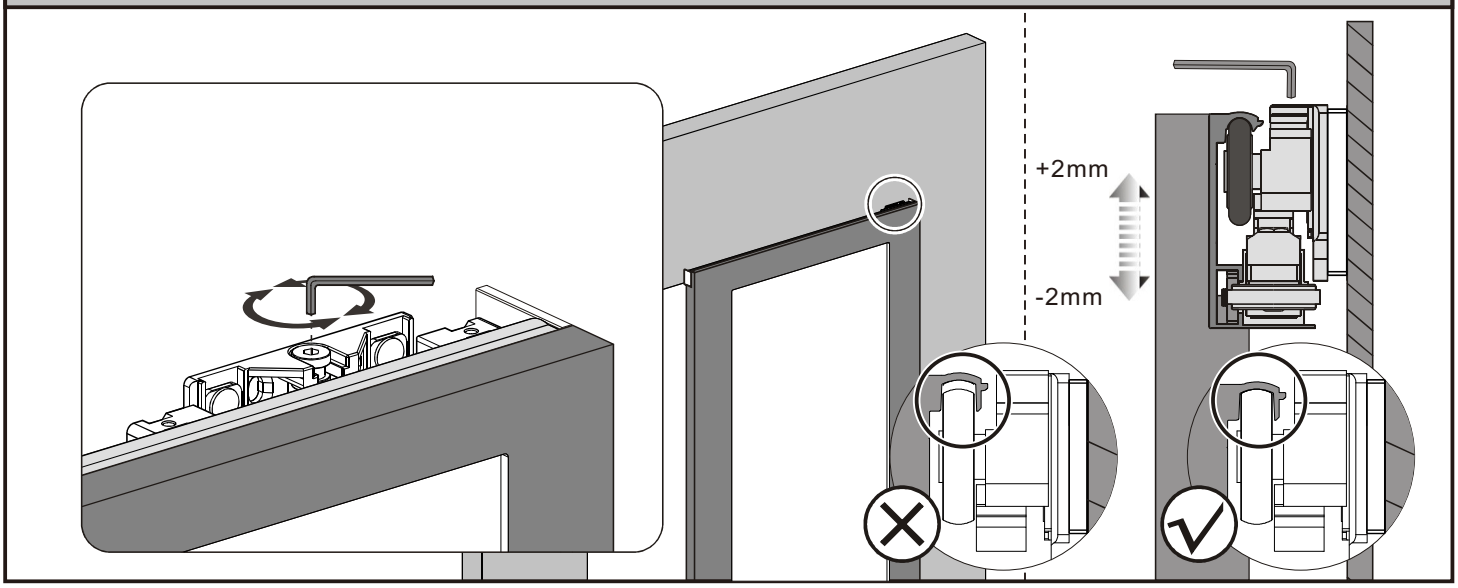

8 Tighten the anti-jump block

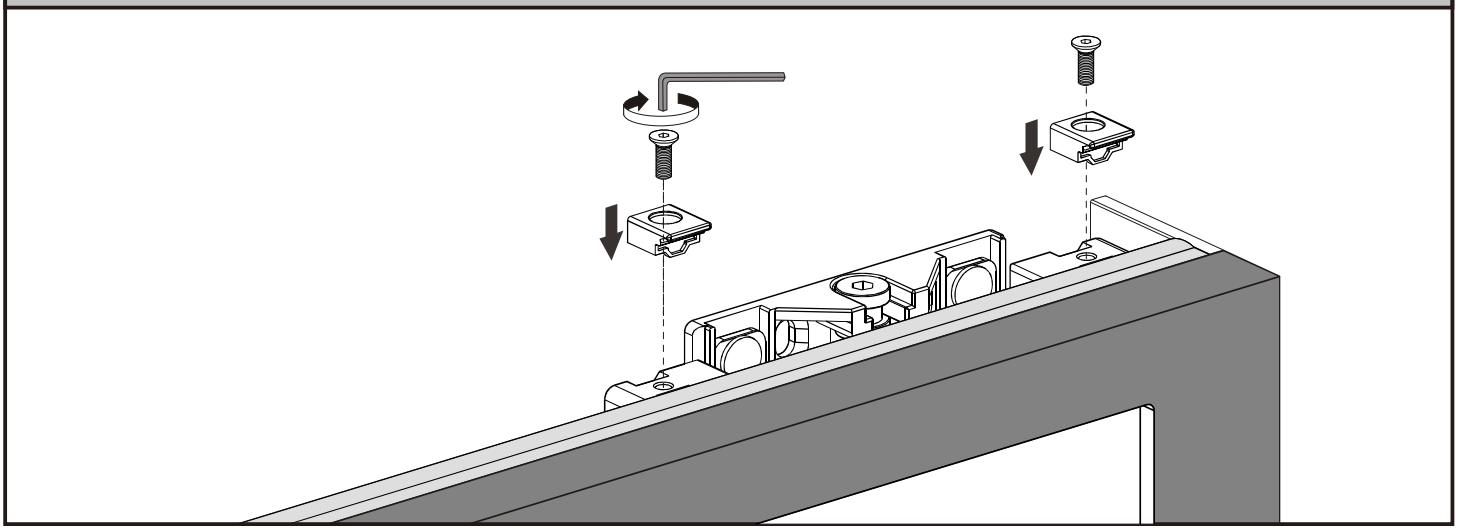

9 Slide the door slab both left and right to ensure actuator is in between the fin of soft close device

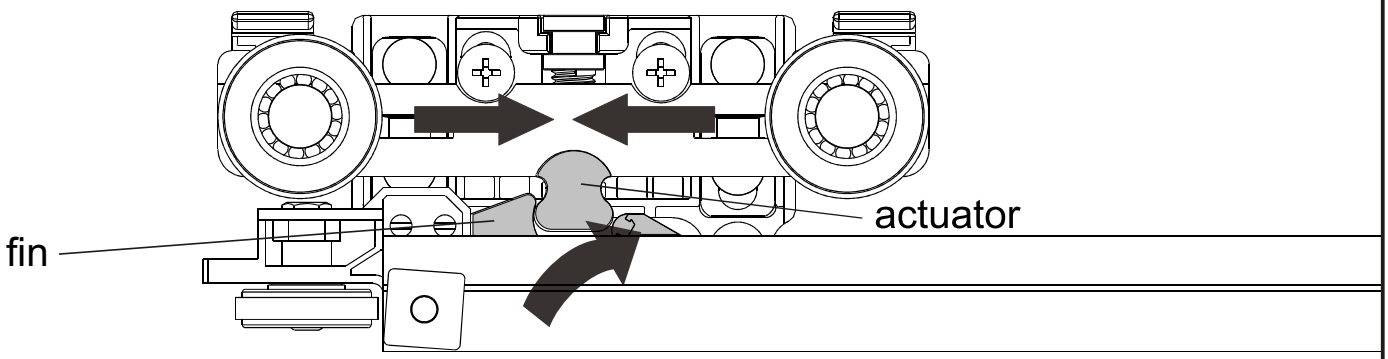

10 Adjust the tightness of the screw to ensure door slab(J) is parallel with wall

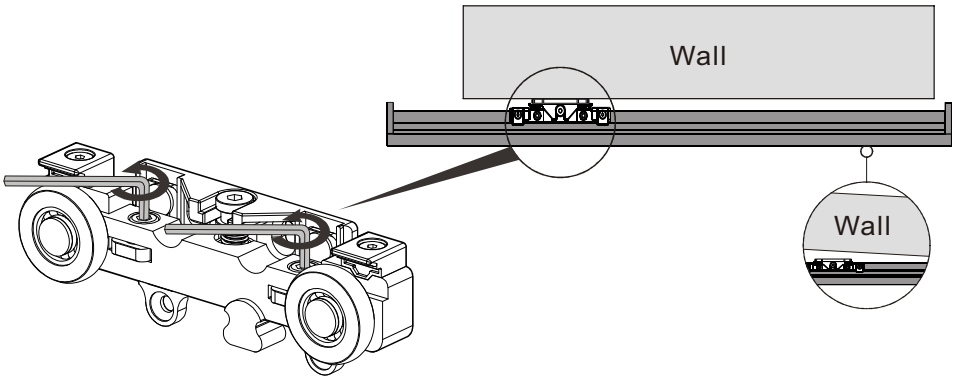

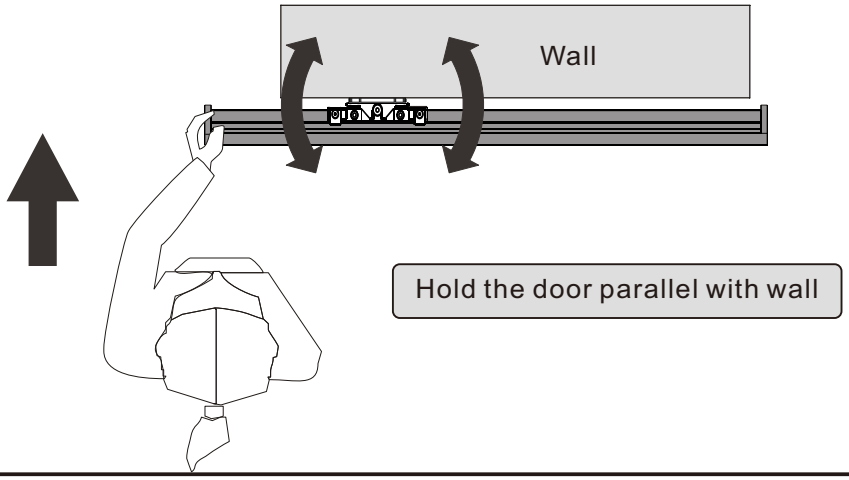

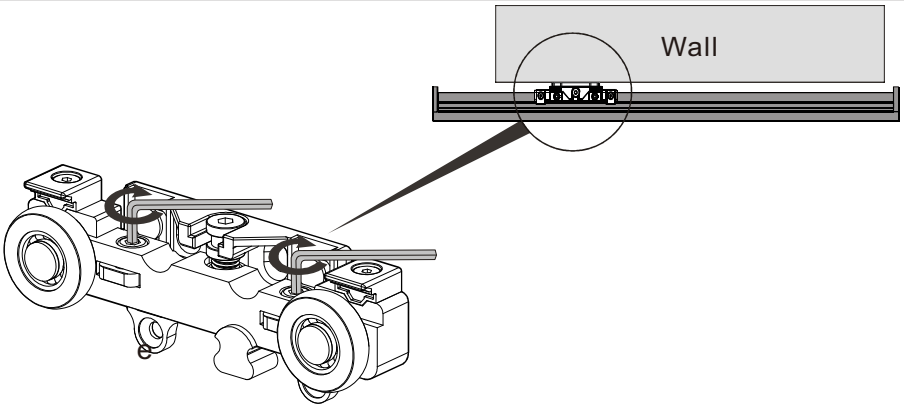
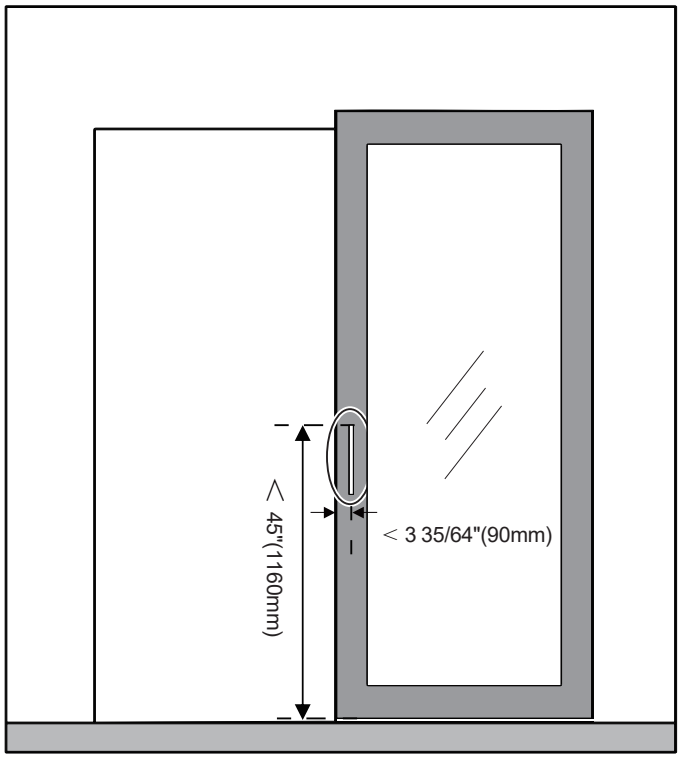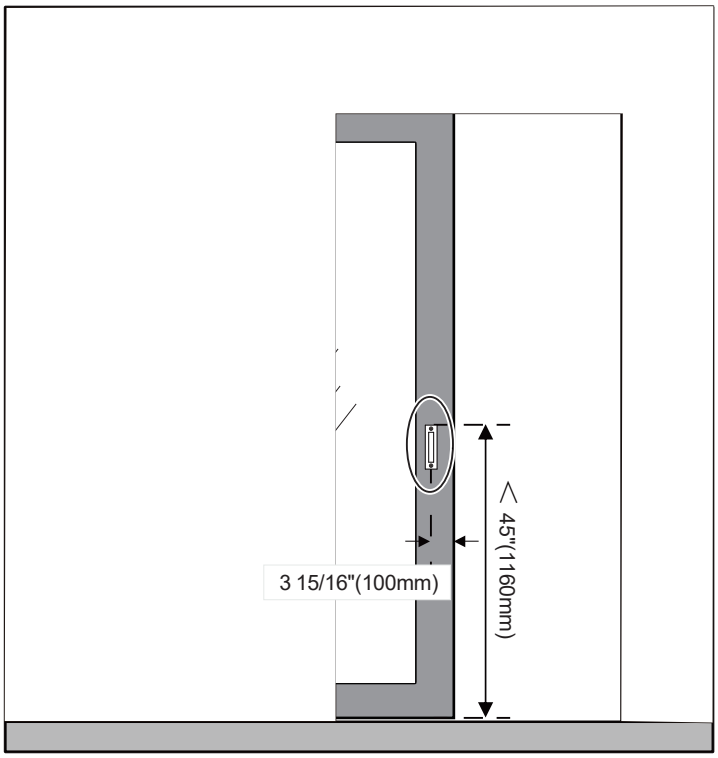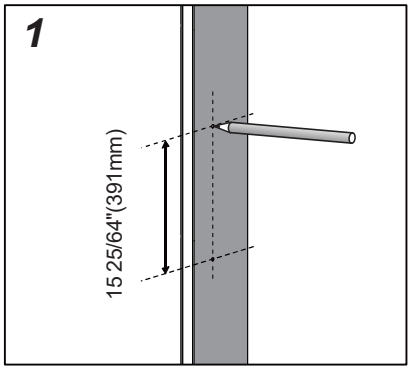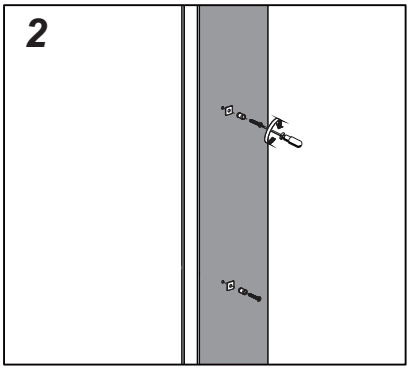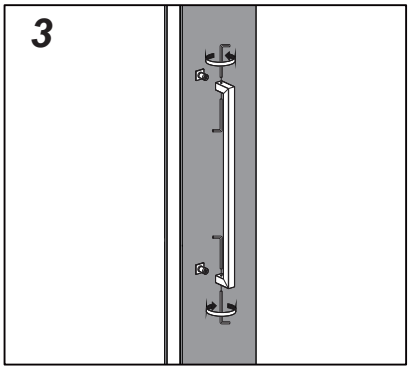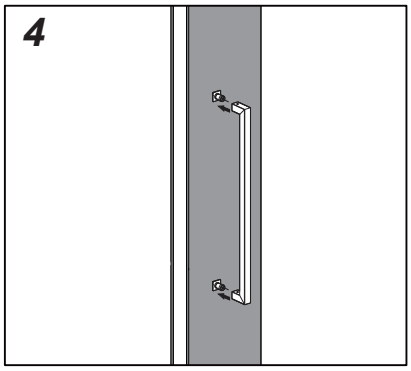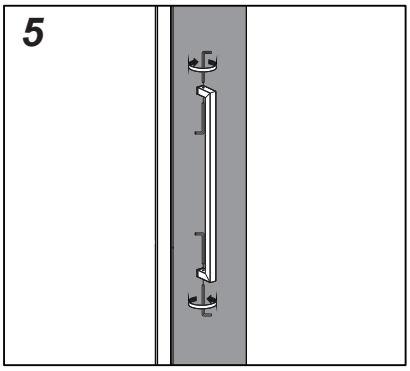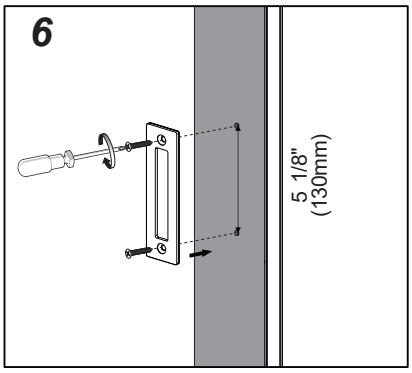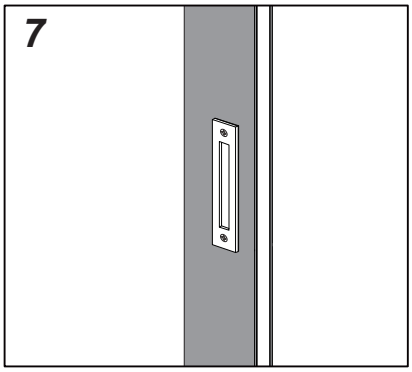
11 install flush pull(H) onto both sides of door slab(J)