Assembly Instruction

Part List

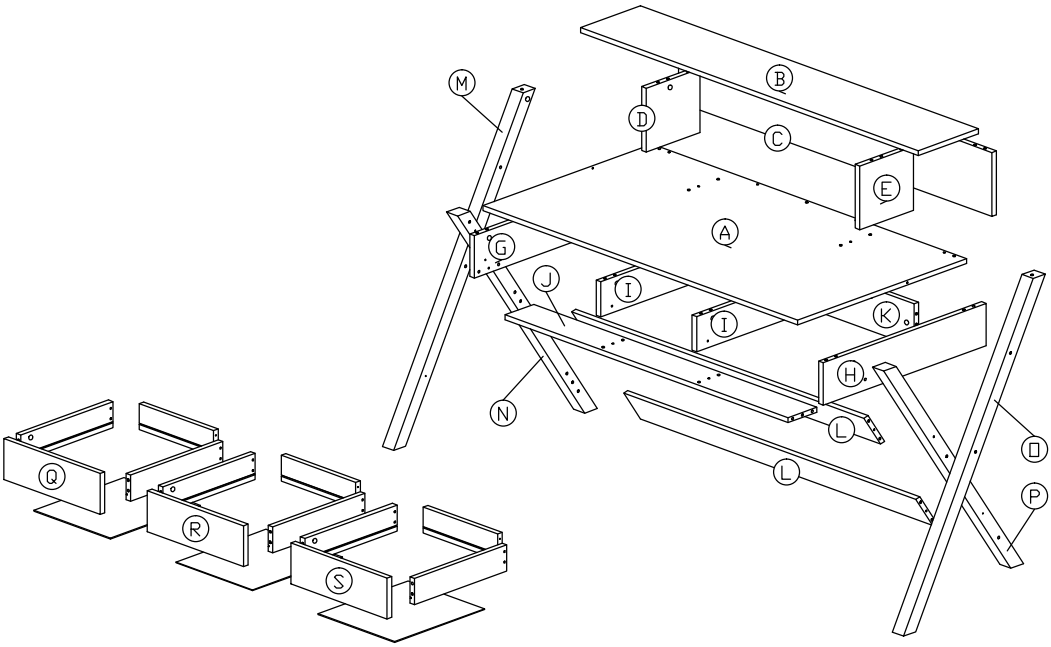

Hardware List			
No.	SHAPE	DESCRIPTION	Qty.
1		**8x25mm Wood Dowel**	56Pcs
2		**M5x8mm Screw** *(Euro Screw)*	12Pcs
3		**M3.5x16mm Screw** *(Black)*	16Pcs
4		**M4x38mm Screw**	12Pcs
5		**M5x38mm Screw**	10Pcs
6		**M6x40mm Screw**	2Pcs
7		**M7x60mm Screw**	8Pcs
8		**15MM Titus Mini Fix**	29Sets
9		**Nail Leg**	4Pcs
10		**15mm Minifix Cap**	6Pcs
11		**15mm Minifix Cap (hole)**	2Pcs
12		**Drawer Slide = 300mm**	3Sets
13		**L Key**	1Pc
14		**Metal Plate** *(304x15x2mm)*	2Pcs

Dowel / Cam - Lock Installation

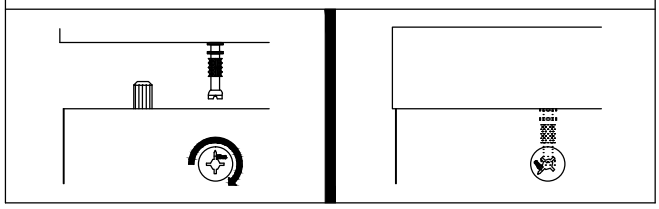

Assembly Instruction

Step 1

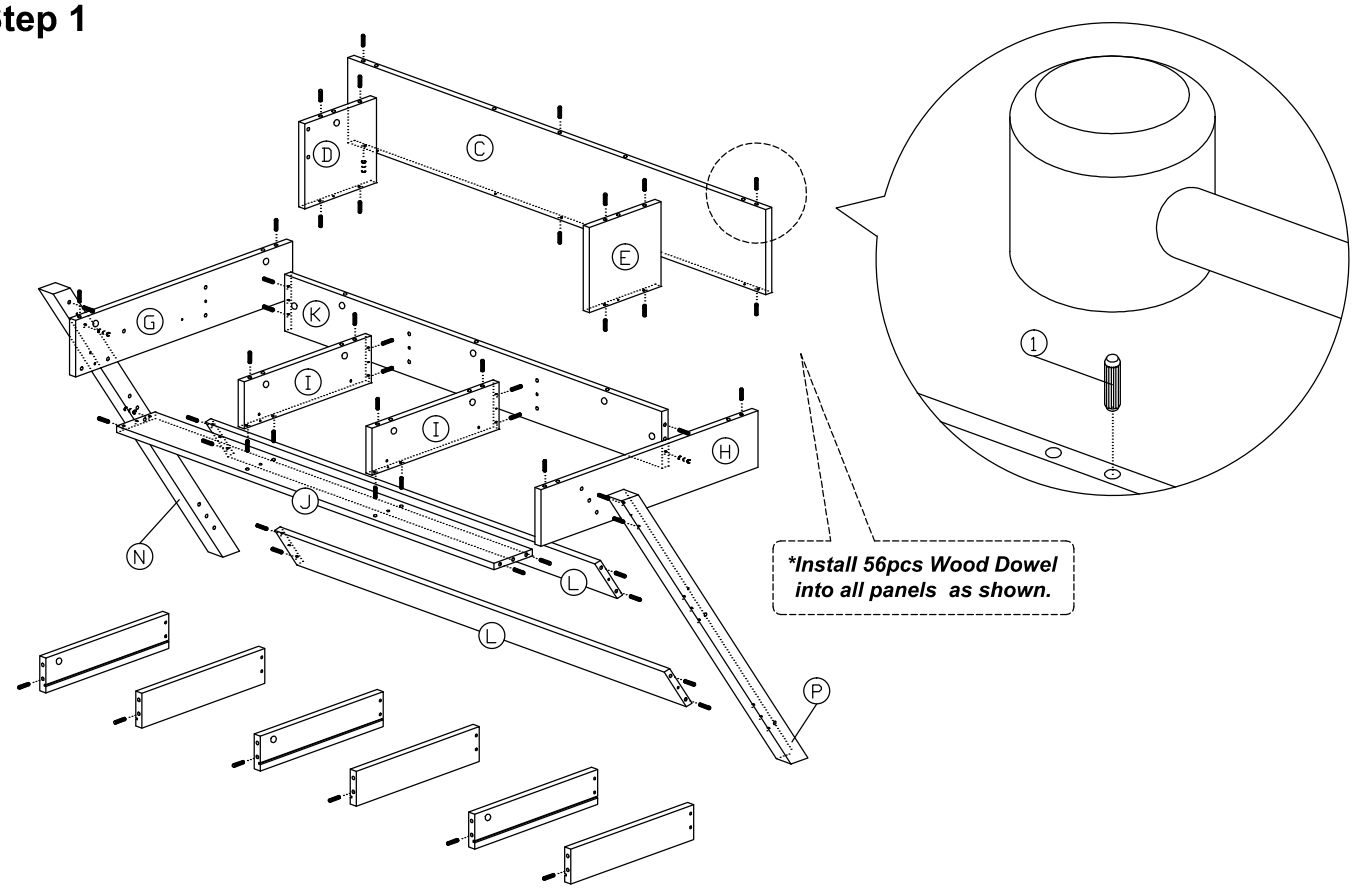

Step 2

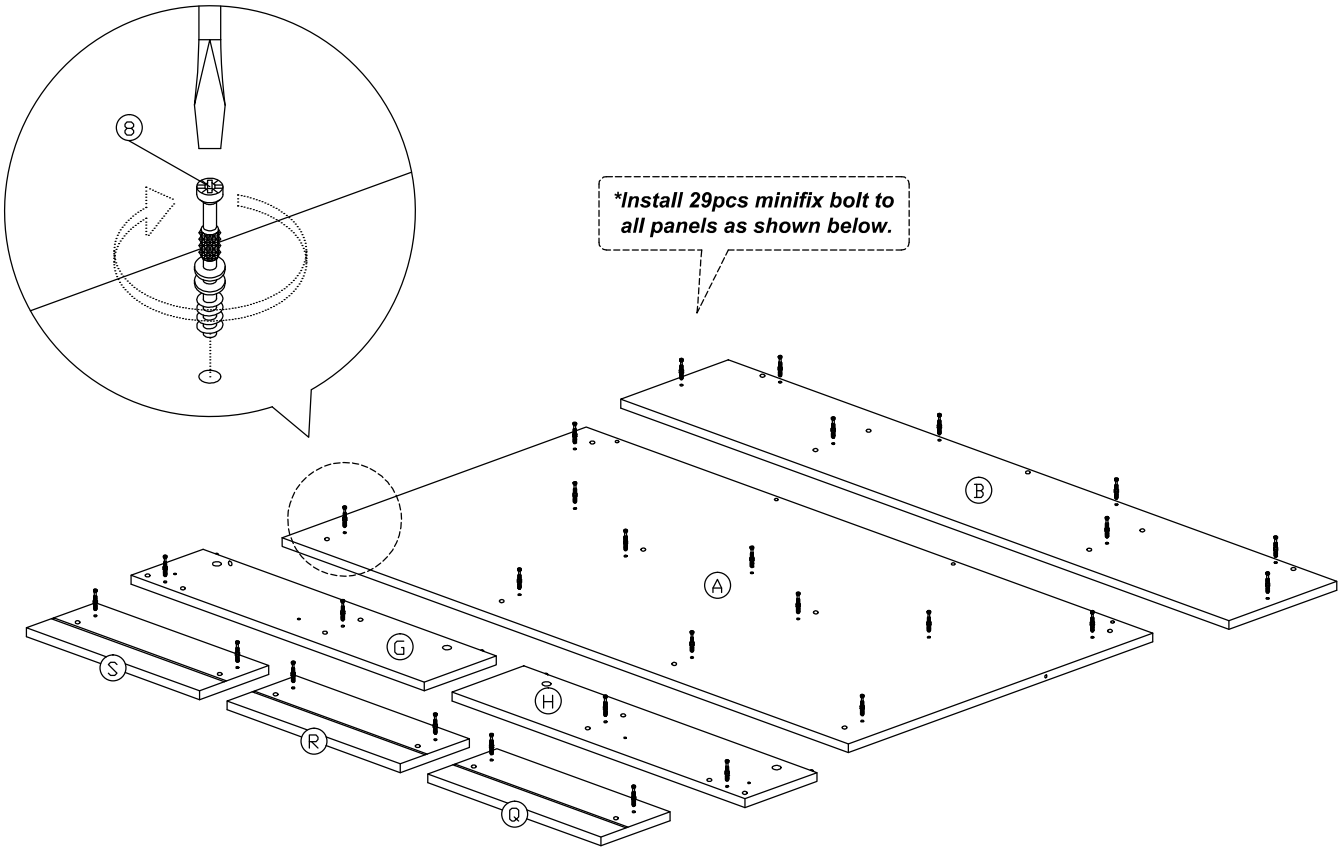

Assembly Instruction

Step 3

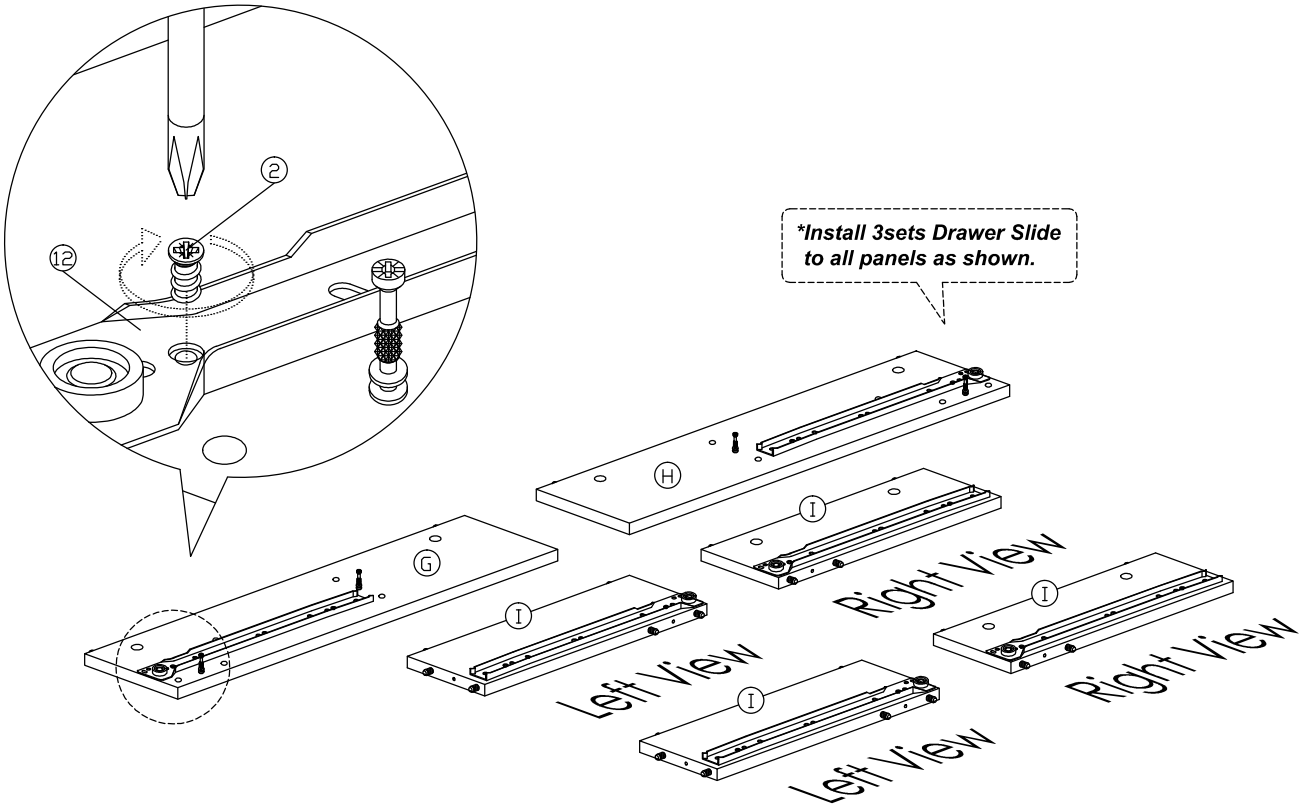

Step 4

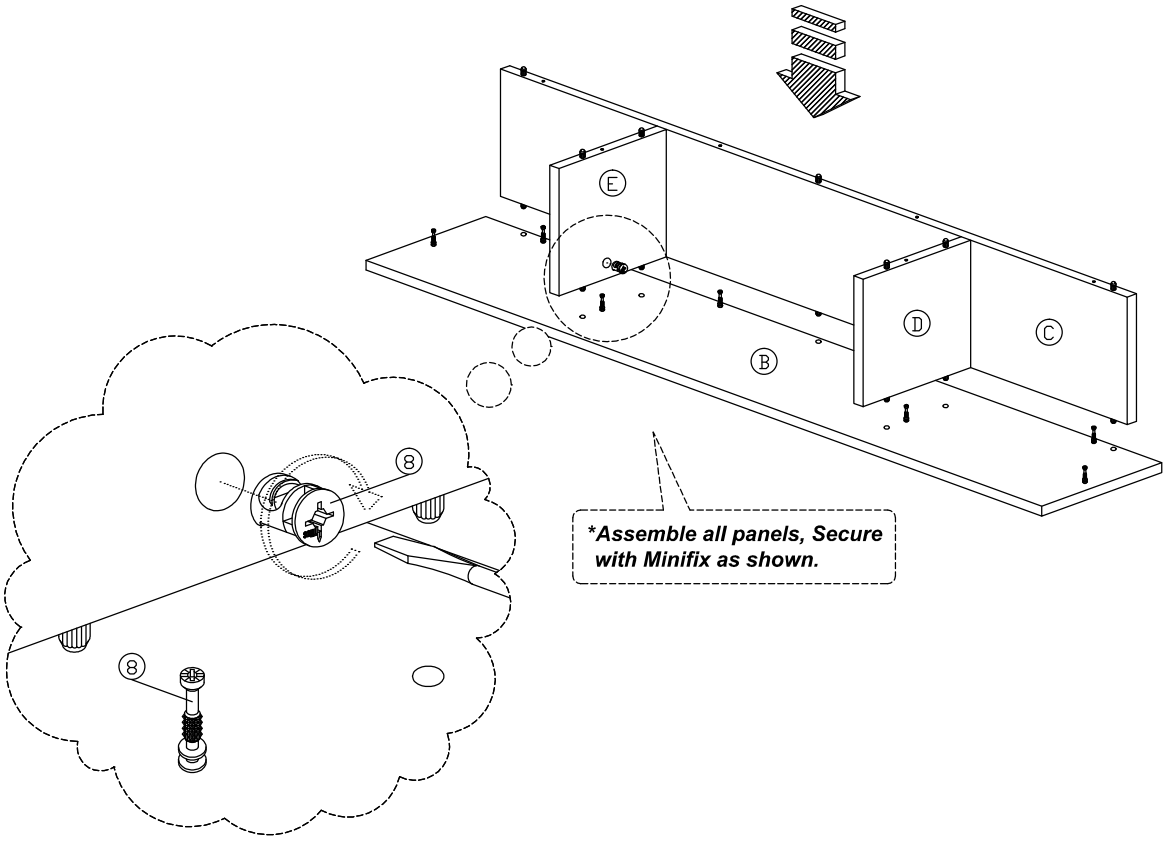

Assembly Instruction

Step 5

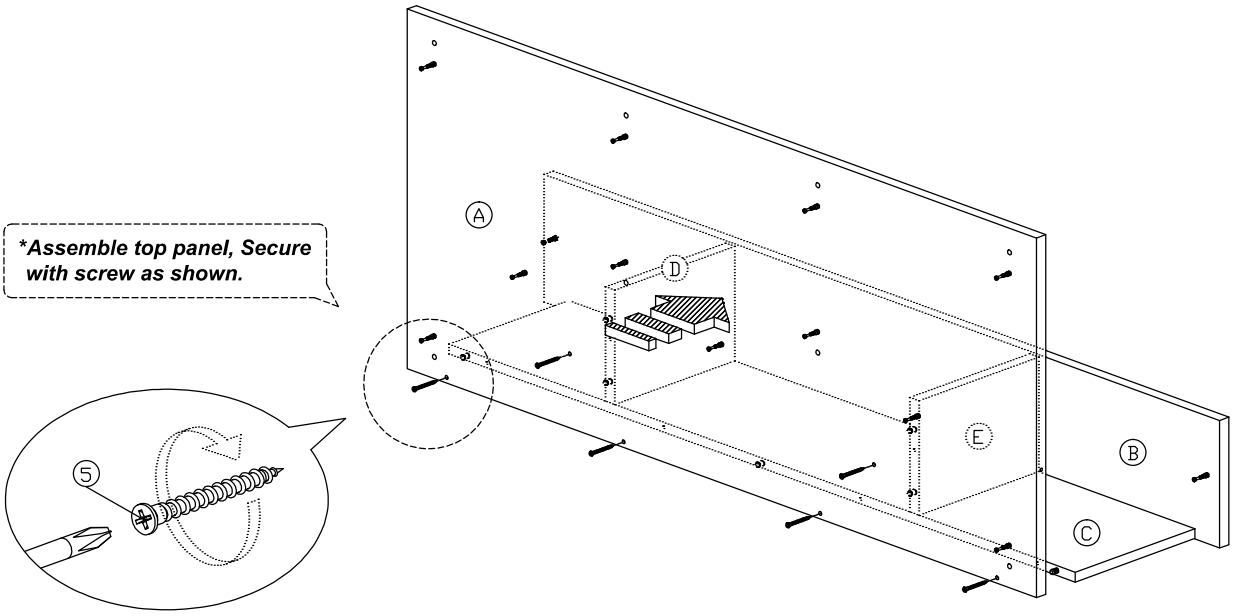

Step 6

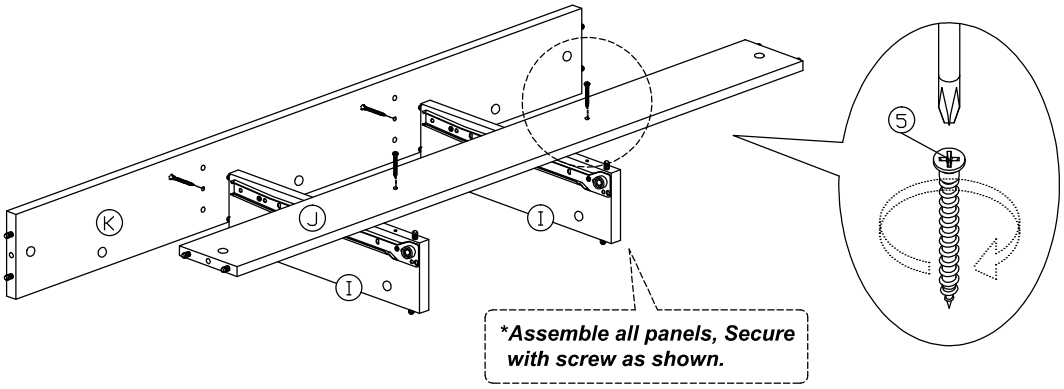

Step 7

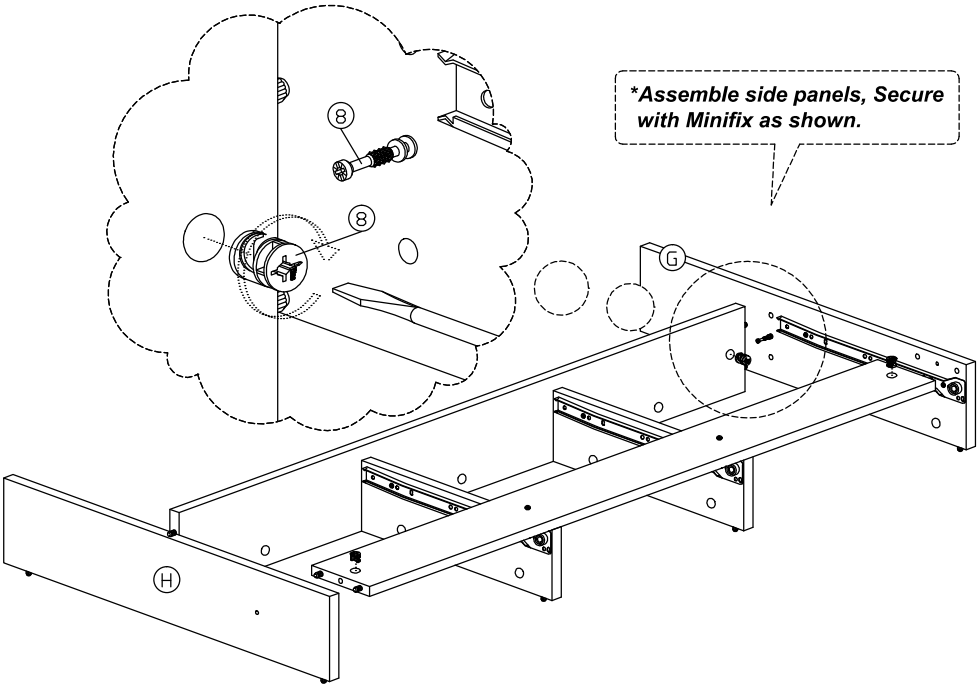

Assembly Instruction

Step 8

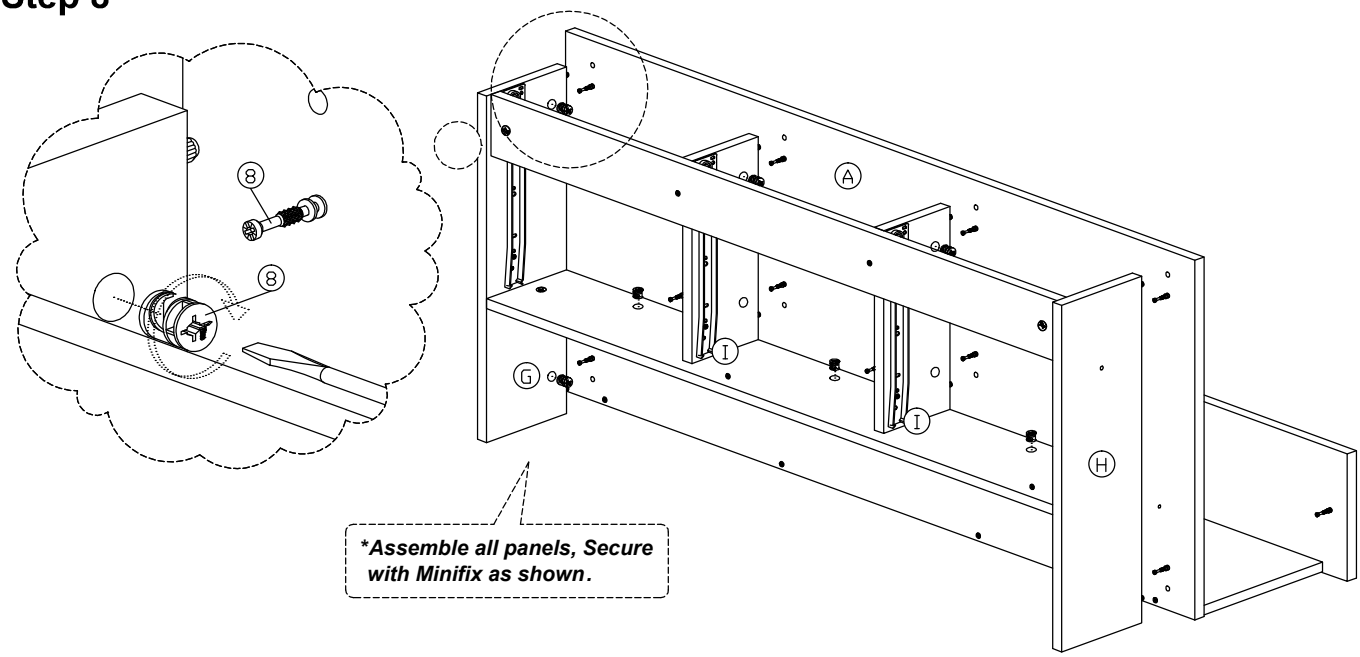

Step 9

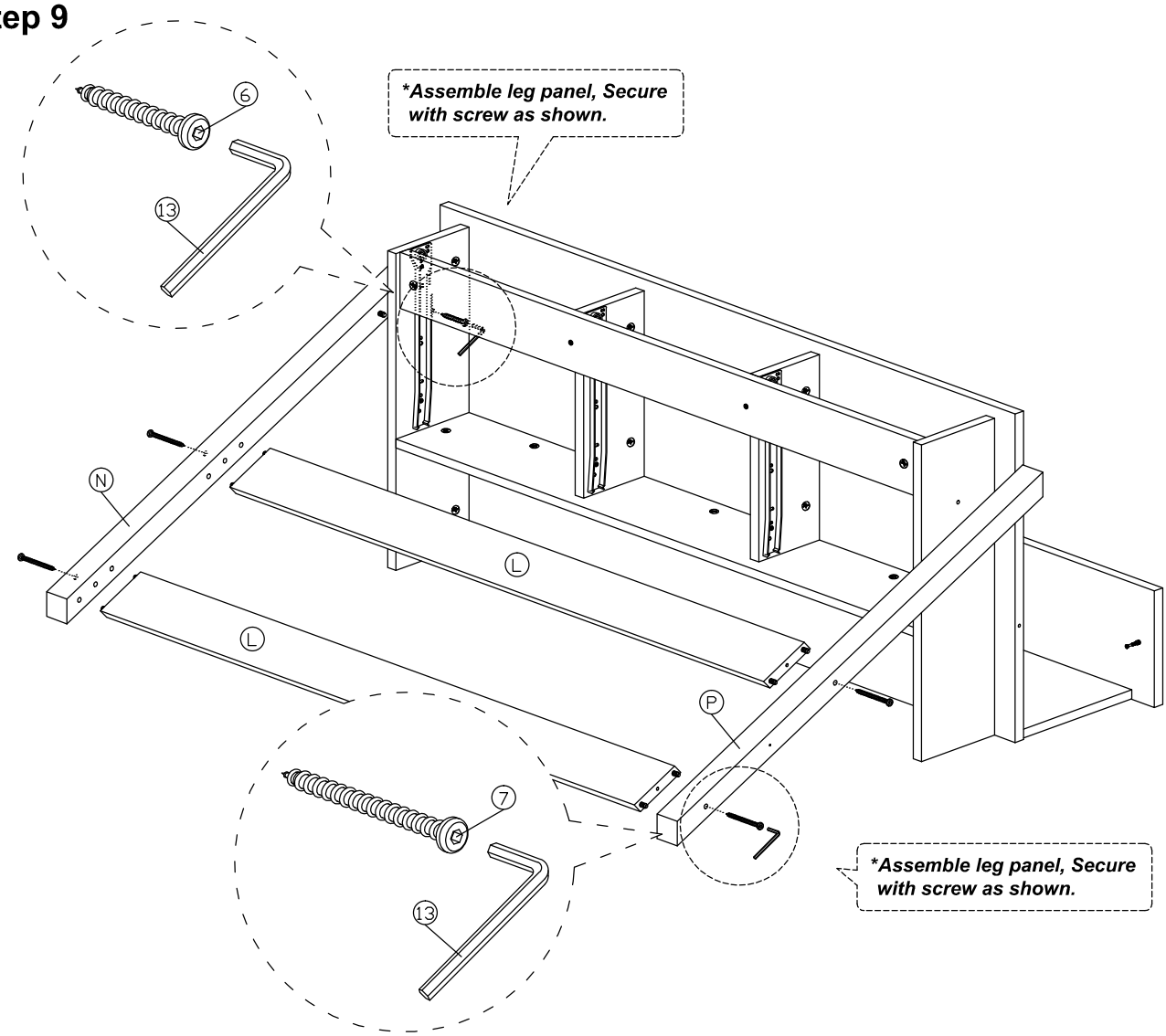

Assembly Instruction

Step 10

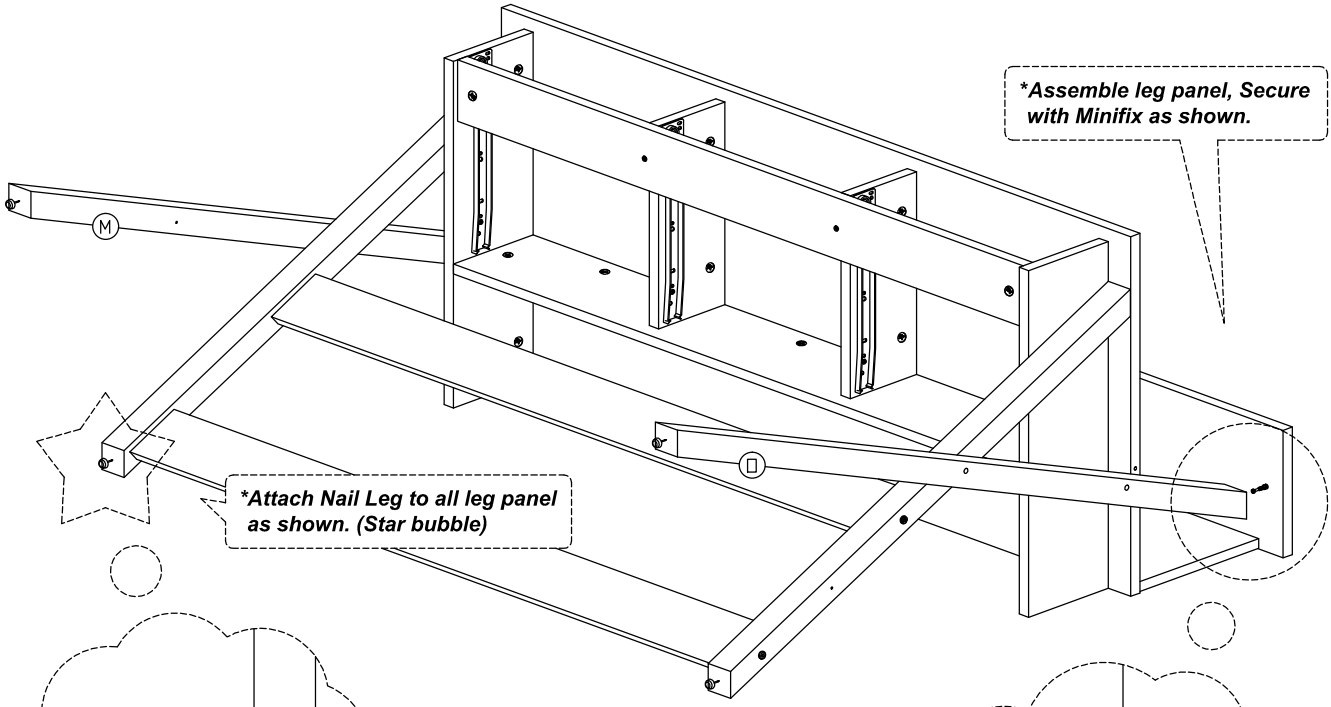

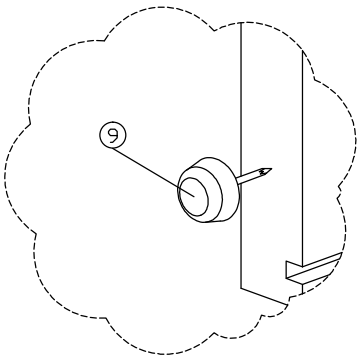

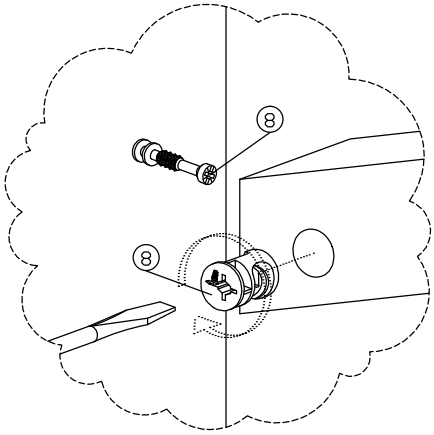

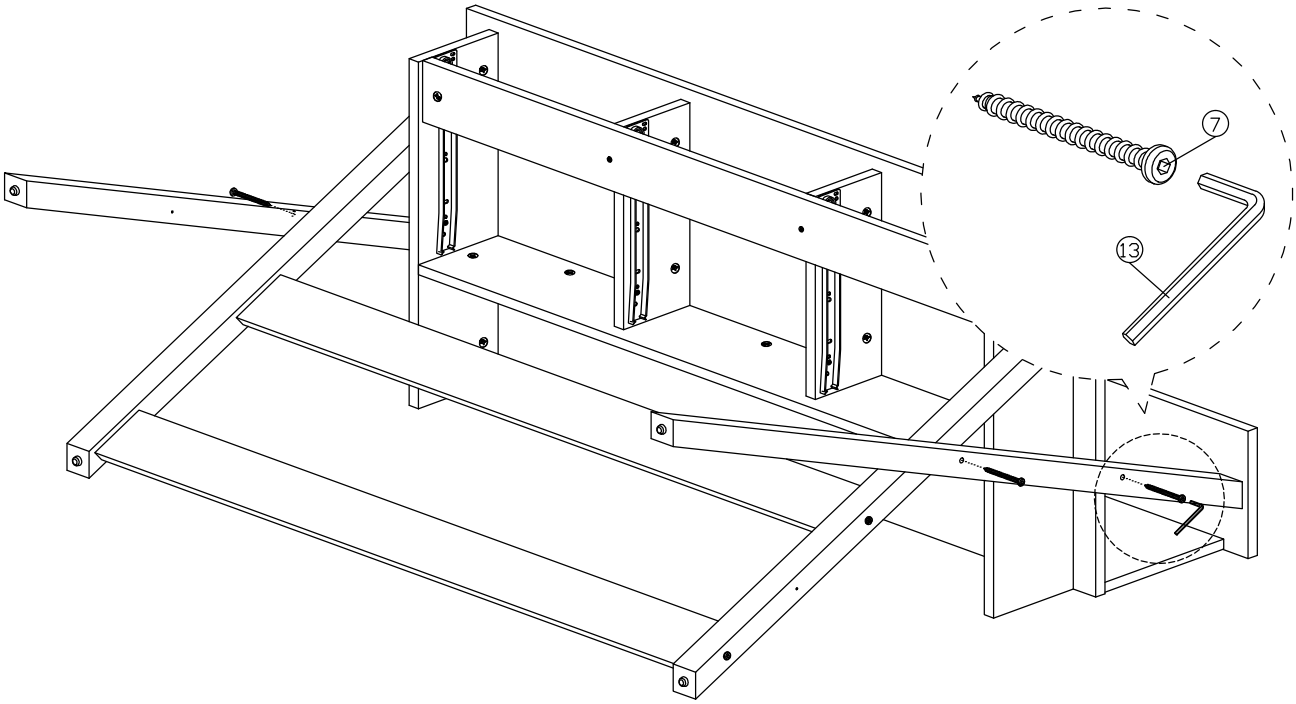

Assembly Instruction

Step 11

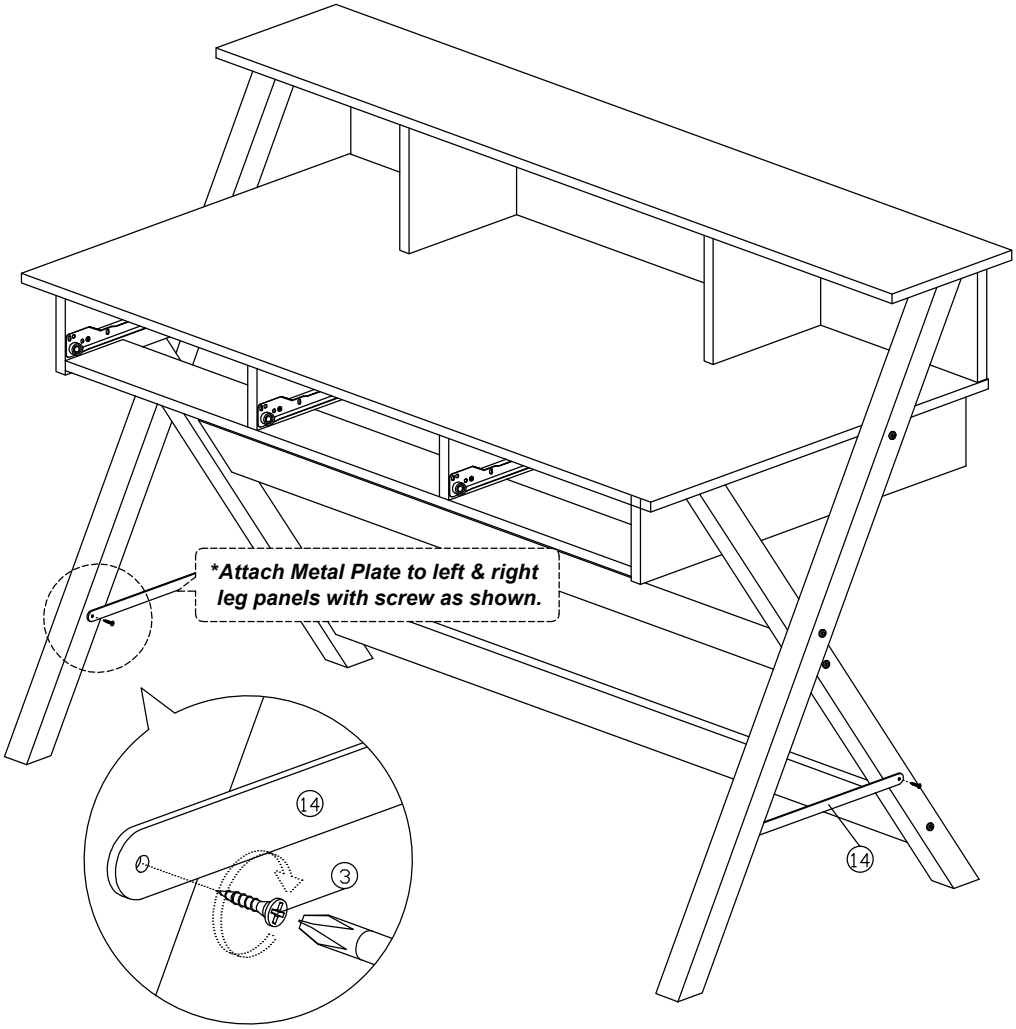

Step 12

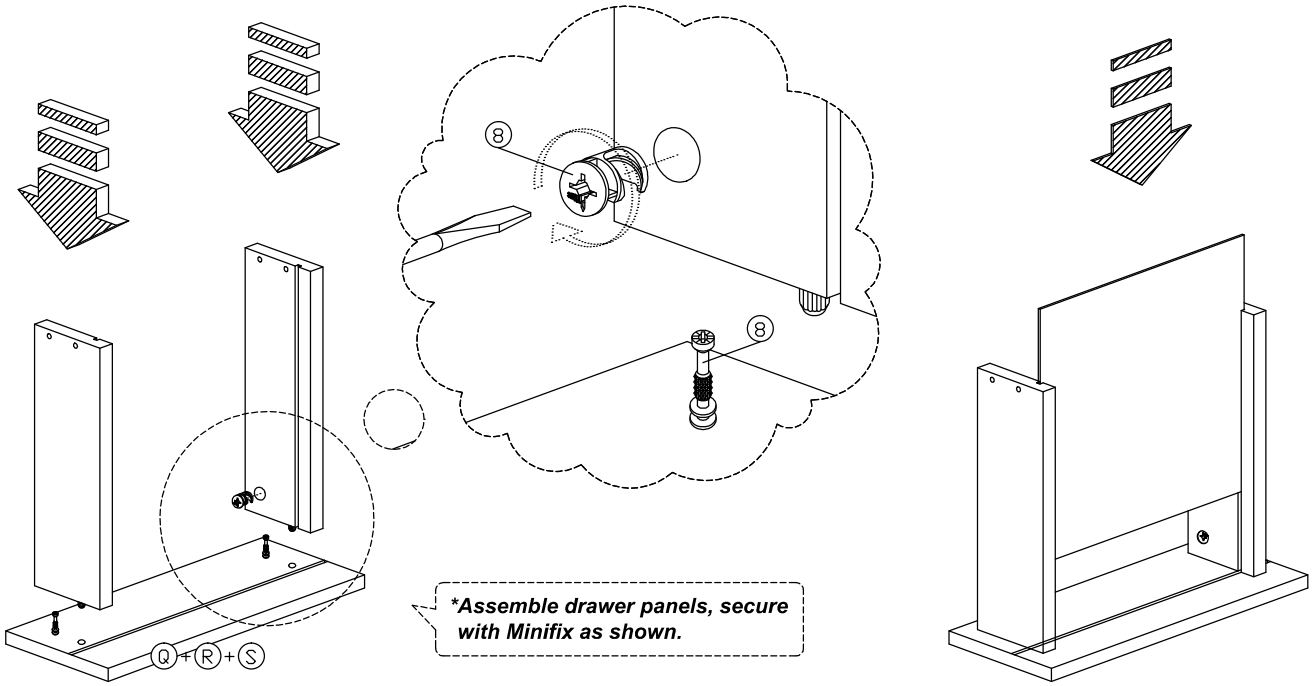

Assembly Instruction

Step 13

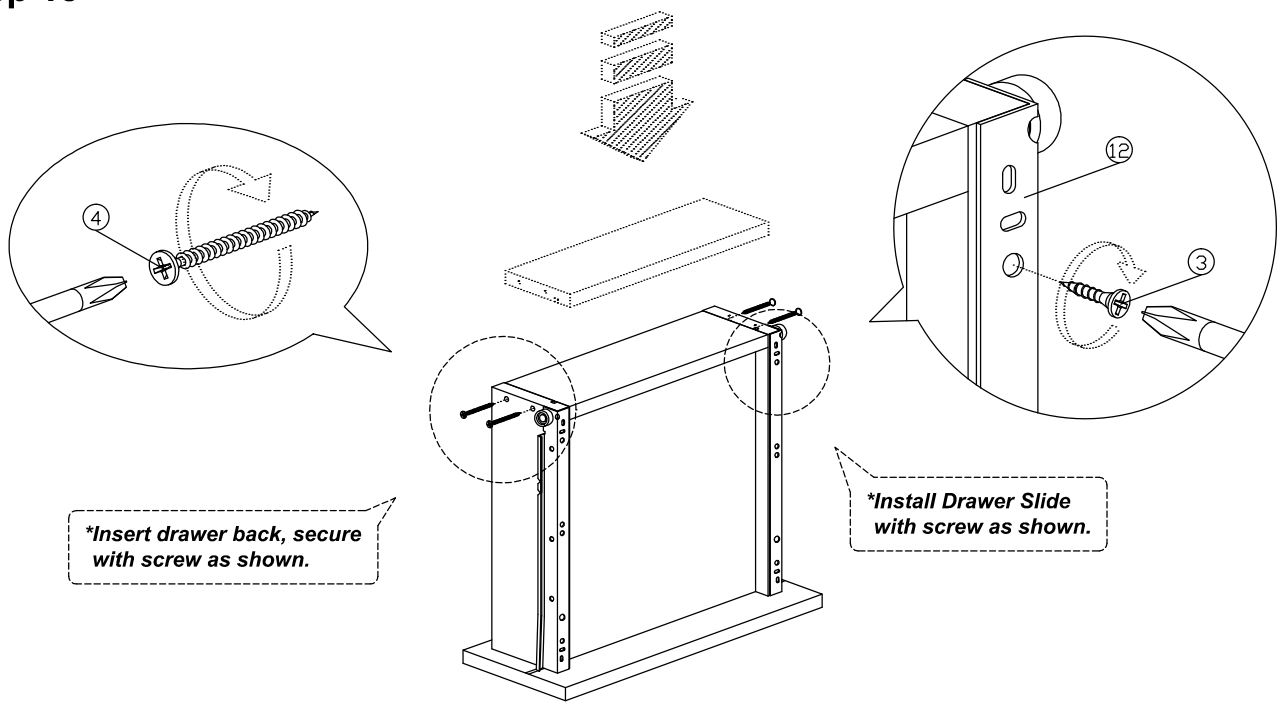
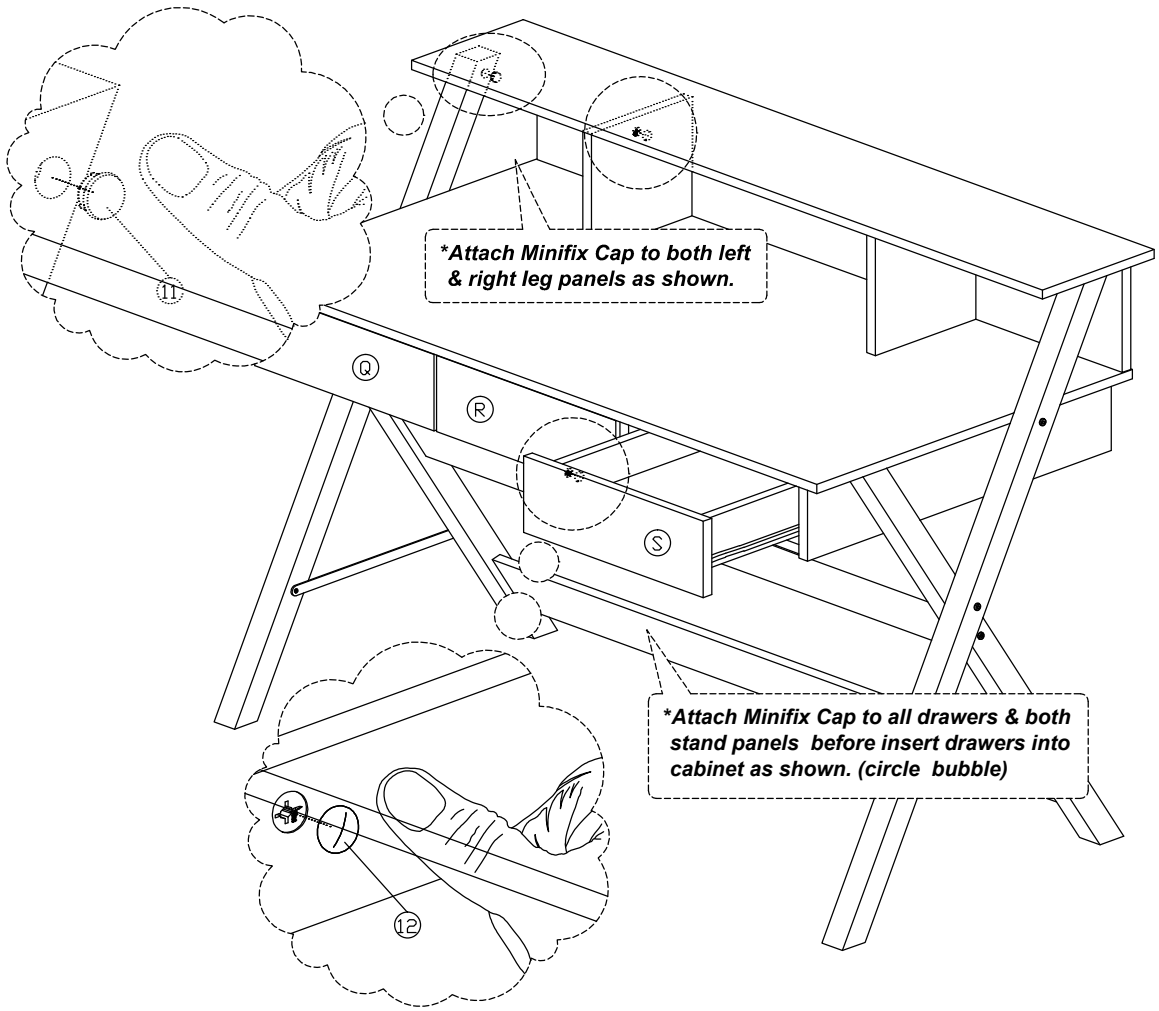
Step 14