KINGSTON

TO ORDER PARTS, CALL: 1-877-252-7277
www.kingstonbrass.com

KB6340,1,2,3,6,7,8NDLE

Single Handle Pressure Balanced Tub & Shower Faucet, Valve Trim Only

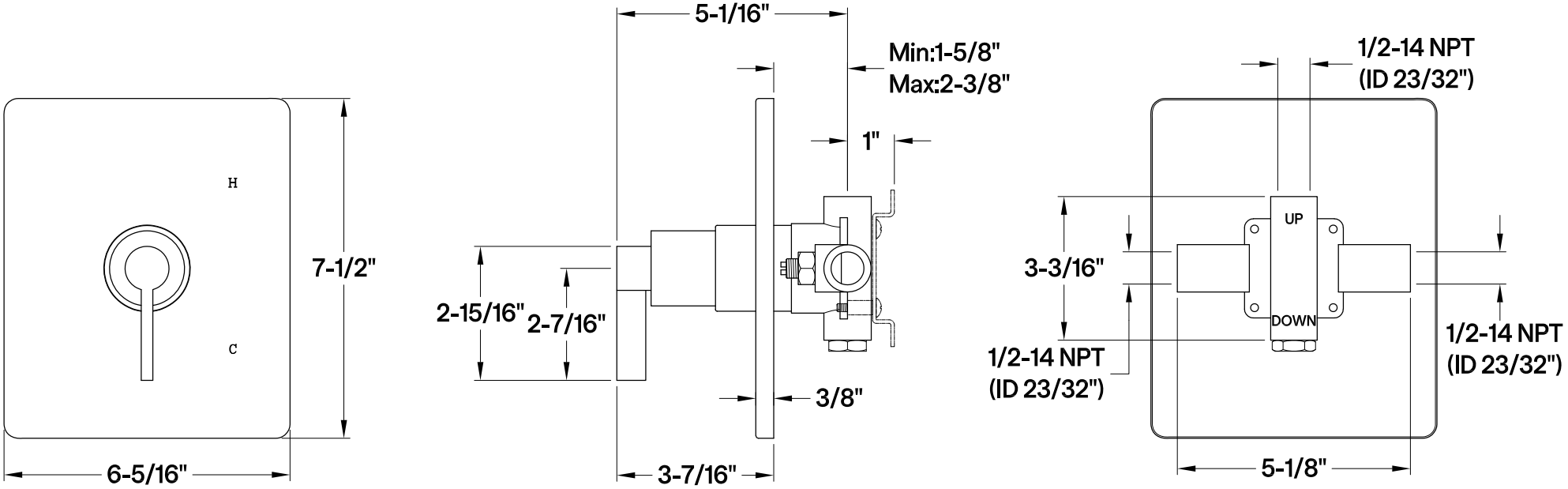

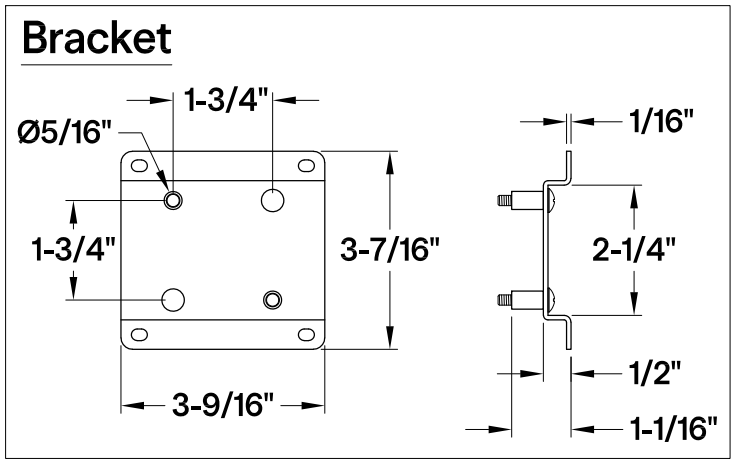

2025-12-A