CHENIER FABRIC COMBINATION SOFA

USAGE GUIDELINES

(To use this product, please read this User Guide carefully)

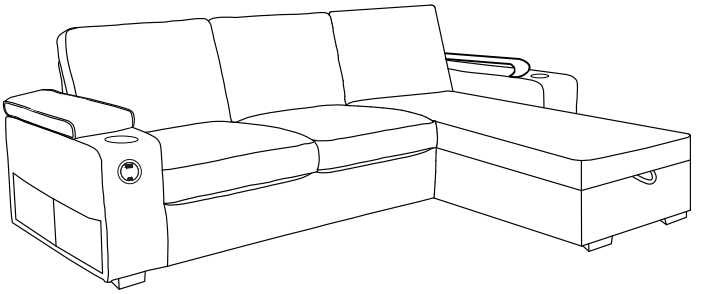

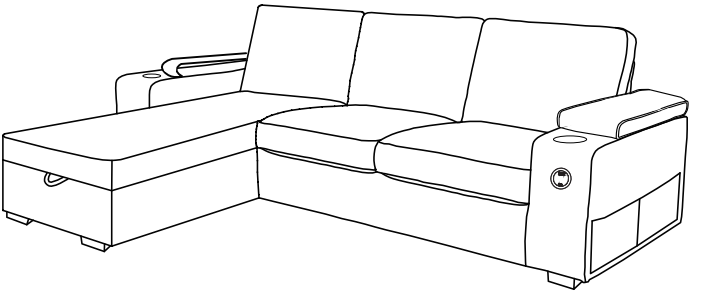

Dear friends.
Thank you for using our products, in order to facilitate your correct operation of this product, please read this user guide carefully before use, and store it in a fixed place so that you can consult it in the future.

PREAMBLE

CATALOGS

Basic Product Parameters ---------- 01

Unpacking List ---------- 01

Installation instructions ---------- 04

Transport and installation ---------- 43

Caveat ---------- 43

Methods of care ---------- 45

BASIC PRODUCT PARAMETERS

BRAND NAME	CHENIER FABRIC COMBINATION SOFA
SIZES	301CMX164CMX83CM

UNPACKING LIST

LOVESEAT

BOX-A

A	B	C	D	E
 x1	 x1	 x2	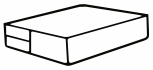 x2	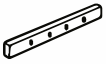 x1
Back bracket	Seat frame	back frame connector	Seat cushion	Front seat frame connector

F	G	H	U2
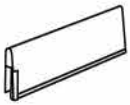 x1	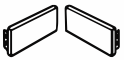 x1	 x1	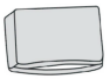 x1
Backrest cover	Foreseat plate	Foreseat plate fabric cover	Back cushion cover

BOX-B

I	J	K	L	M
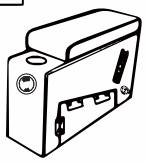 x1	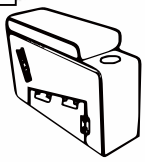 x1	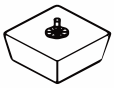 x4	 x2	 x1
Handrail	Handrail	Feet	Back cushion	Power cord

N	O	P	Q	R
 M6 x1	 M8*70mm x2	 M8*35mm x12	 M8*50mm x4	 R1 R2 x2
Allen Key	Bolt	Bolt	Bolt	Middle leg

S	O Q	O P Q
 x2		
Handrail bottom plate	Butterfly nut 4PCS	Flat Washer 20pcs

CHAISE

I	V	W	X	Y
 x1	 x1	 x1	 x2	
Chaise back cushion	Chaise Seat frame	Chaise seat cushion	Feet	Chaise Back bracket

N	K	Z	Z	12
 x1	 x2	 M6*50mm x1		 x1
Allen Key	Feet	Bolt	Flat Washer 1pcs	Back cushion cover

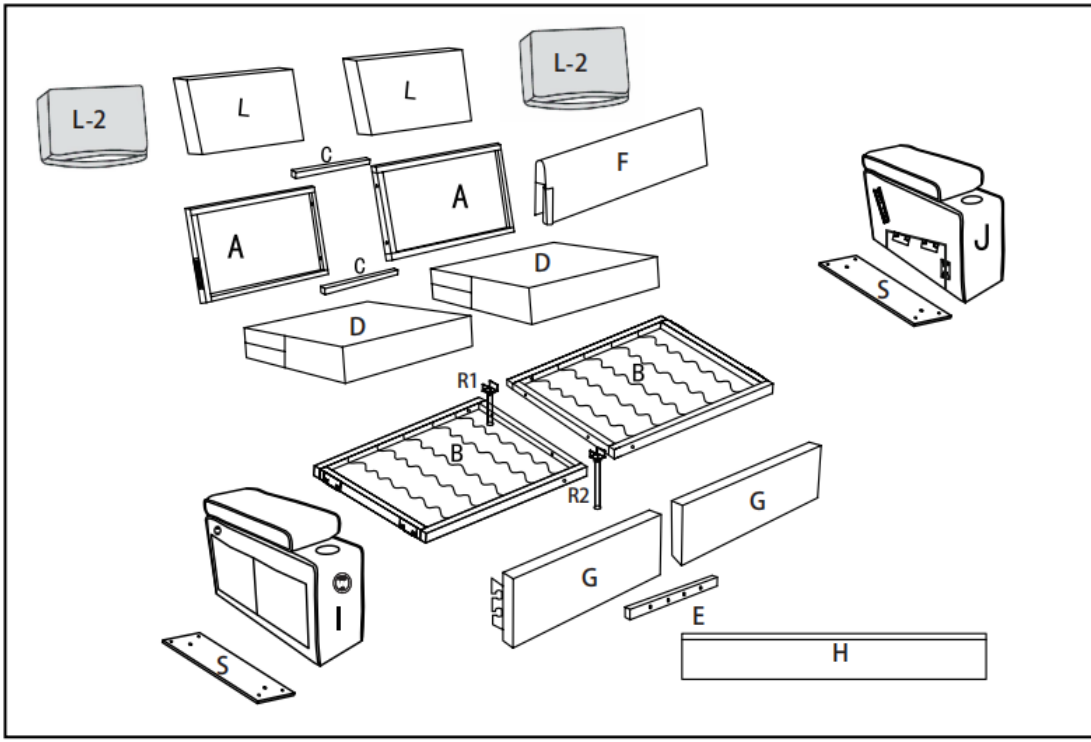
L-2
L
L
L-2
C
A
A
F
C
D
D
J
S
R1
B
B
R2
G
G
I
S
E
H

INSTALLATION INSTRUCTIONS

step1

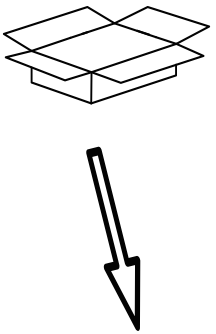

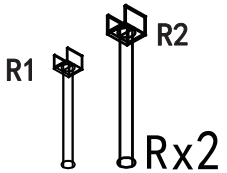

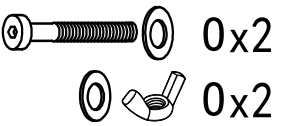



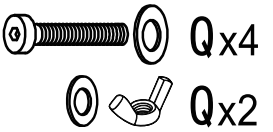



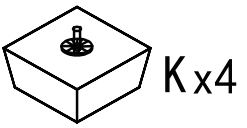



1、Seat and back cushions may take 24-48 hours to fully expand, which will allow wrinkles and indentations caused by packing to fade.

2、To close the zipper, please follow diagram 1. Failure to follow this could result in damage to the zipper.

INSTALLATION INSTRUCTIONS

step2

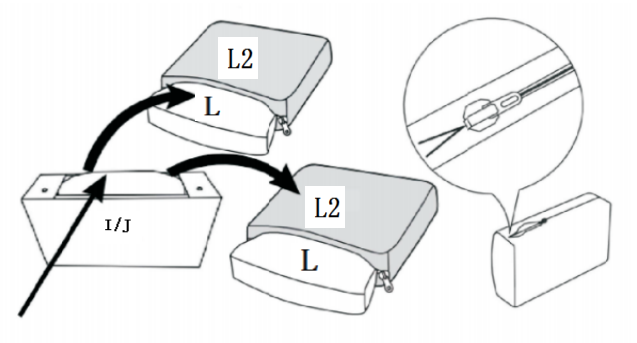

Back cushion interior are in the armrest frame, first you should take out then tuck it in cover

step3

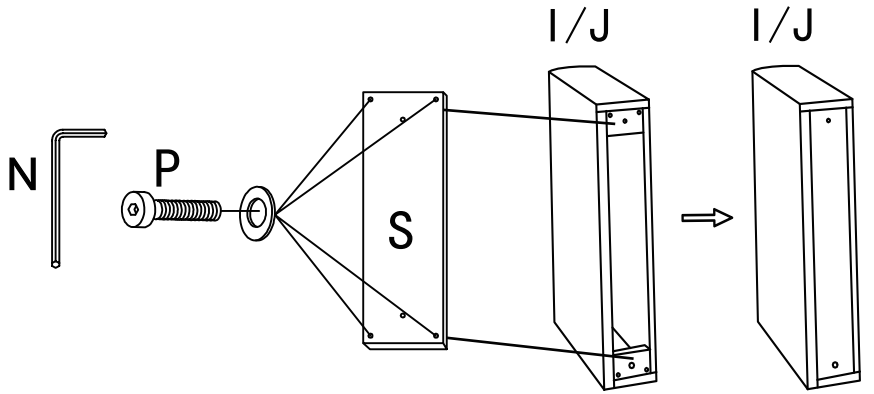

INSTALLATION INSTRUCTIONS

step4

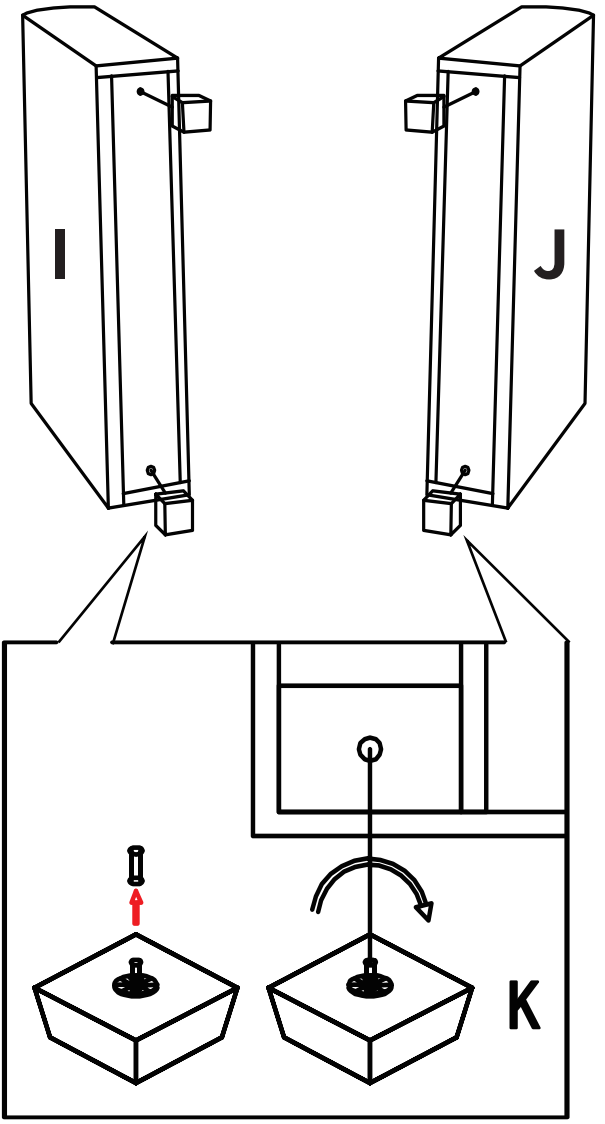

step5

How to use control panel that outside of right armrest?

Control panel hasdual USB outlets.....(5V2A+TypeC) that keep your devices charging, such as neariy all smartphone(like iPhone, Samsung..), ipad, headphones, kindle..

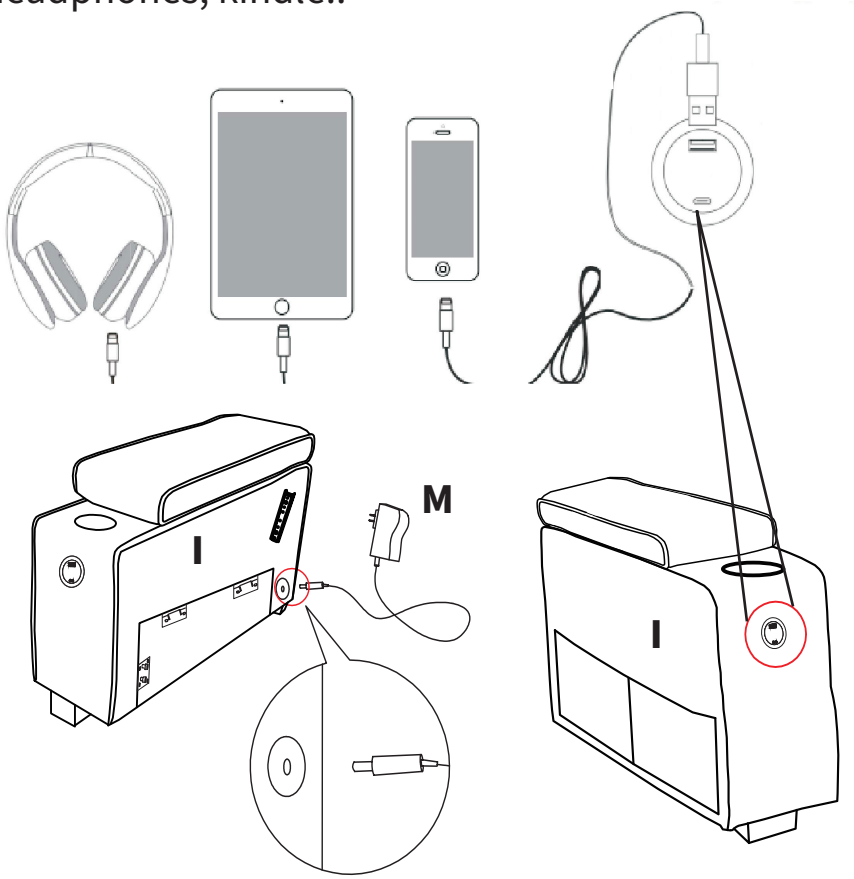

INSTALLATION INSTRUCTIONS

step6

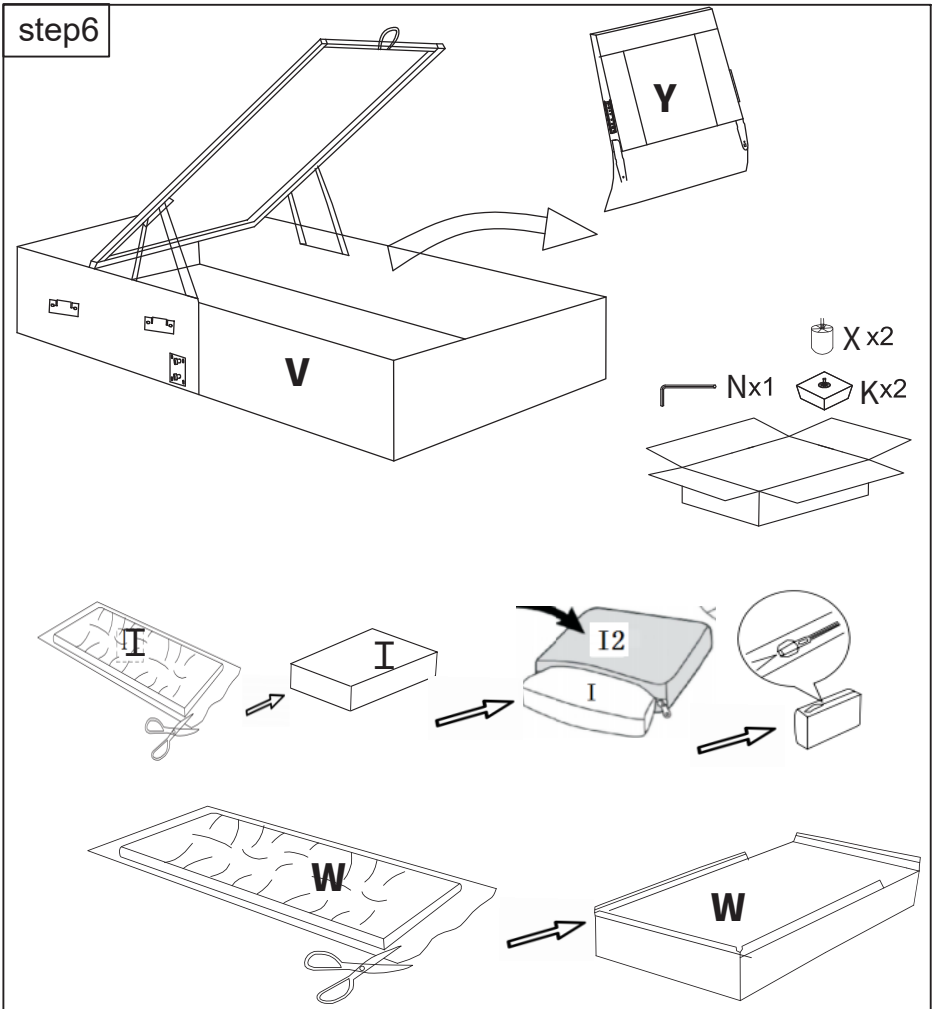

Seat and back cushions may take 24-48 hours to fully expand, which will allow wrinkles and indentations caused by packing to fade.

step7

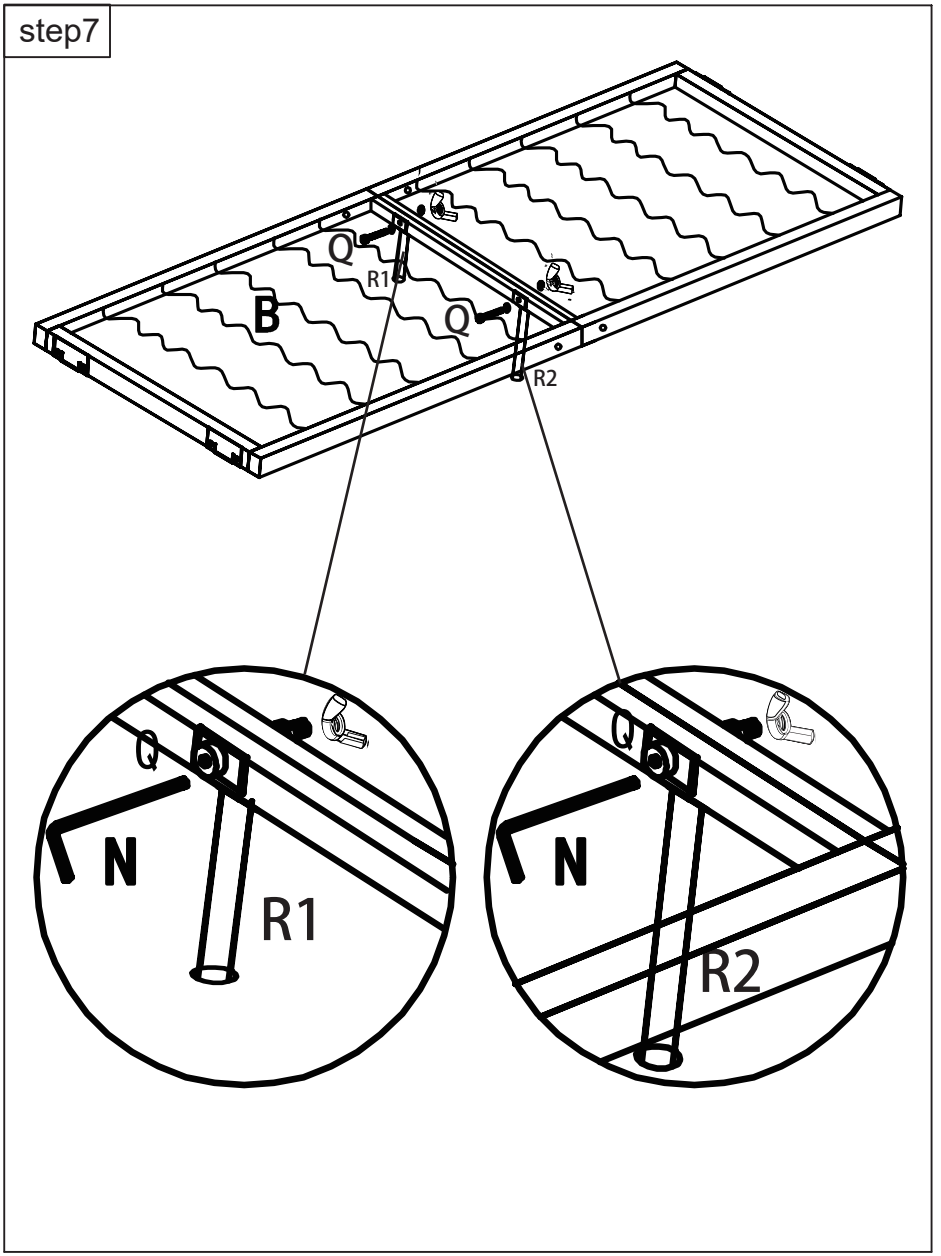

INSTALLATION INSTRUCTIONS

step8

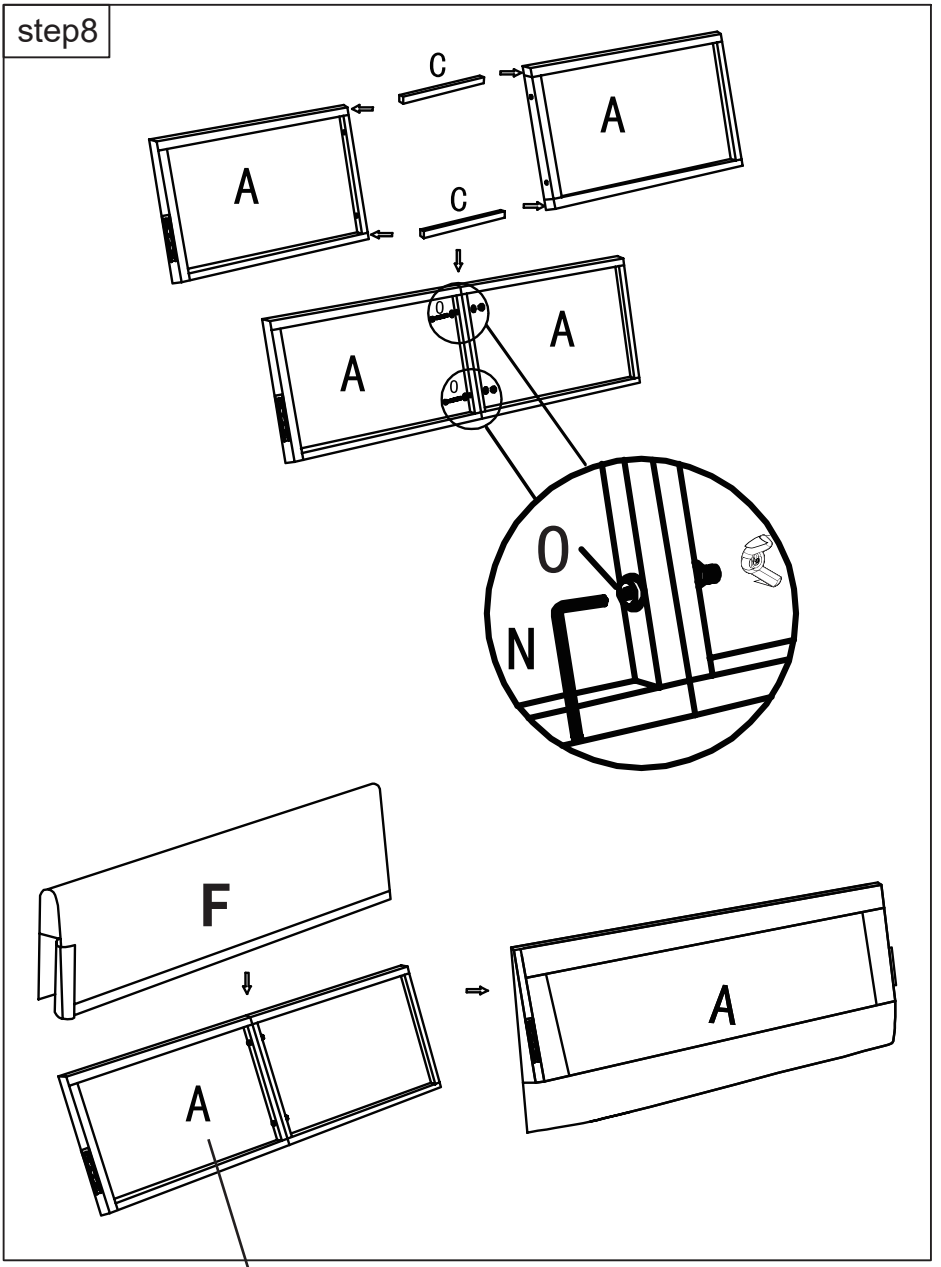

step9

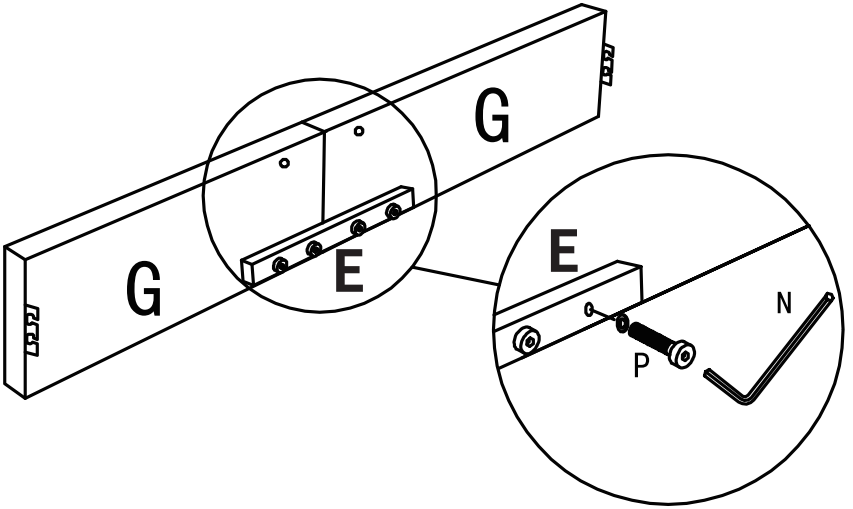

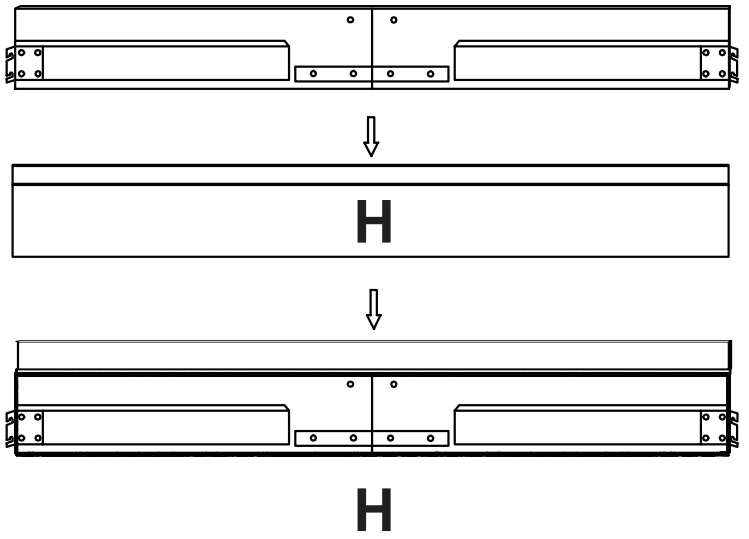

INSTALLATION INSTRUCTIONS

step10

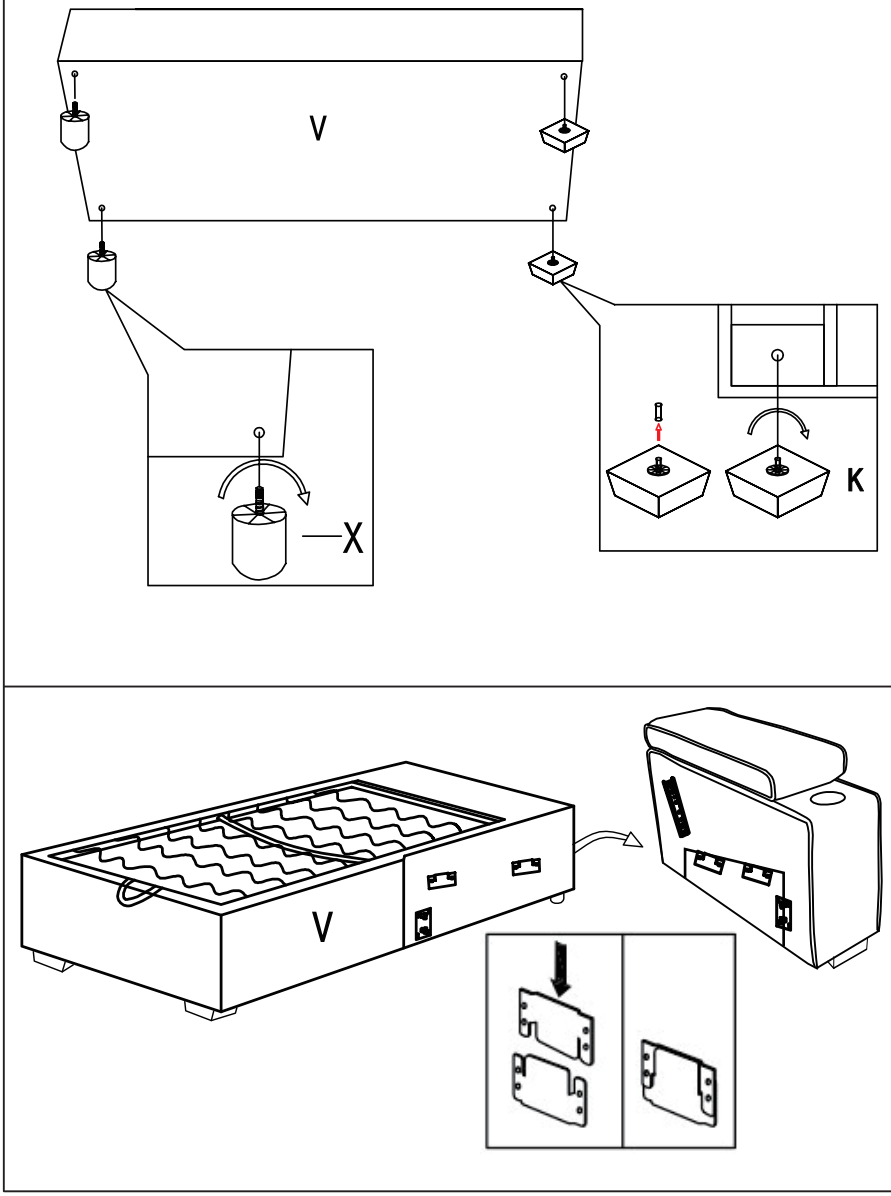

step11

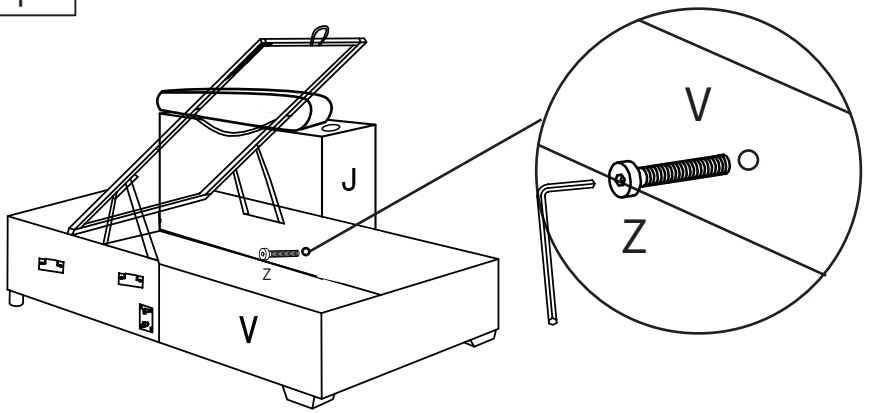

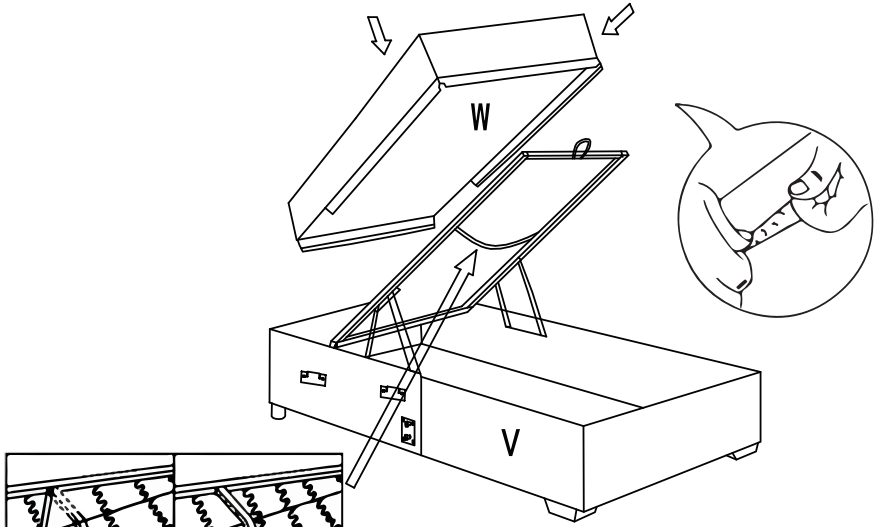

step12

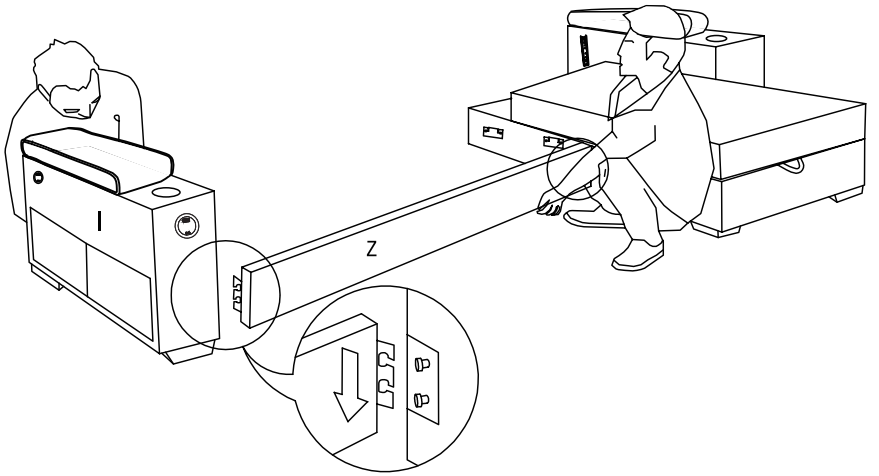

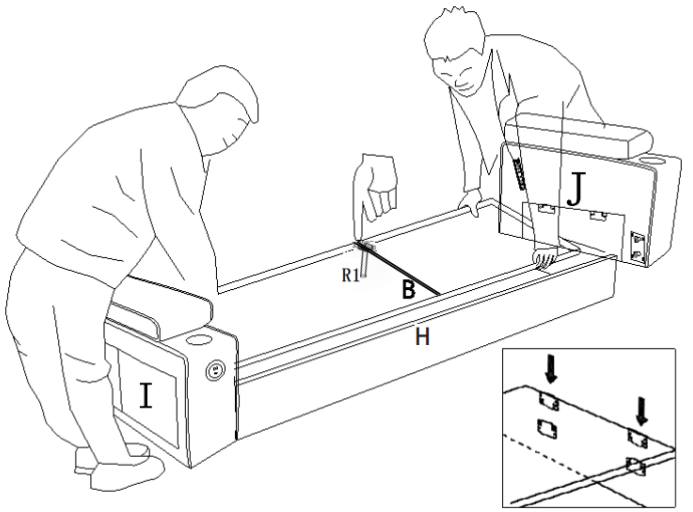

step13

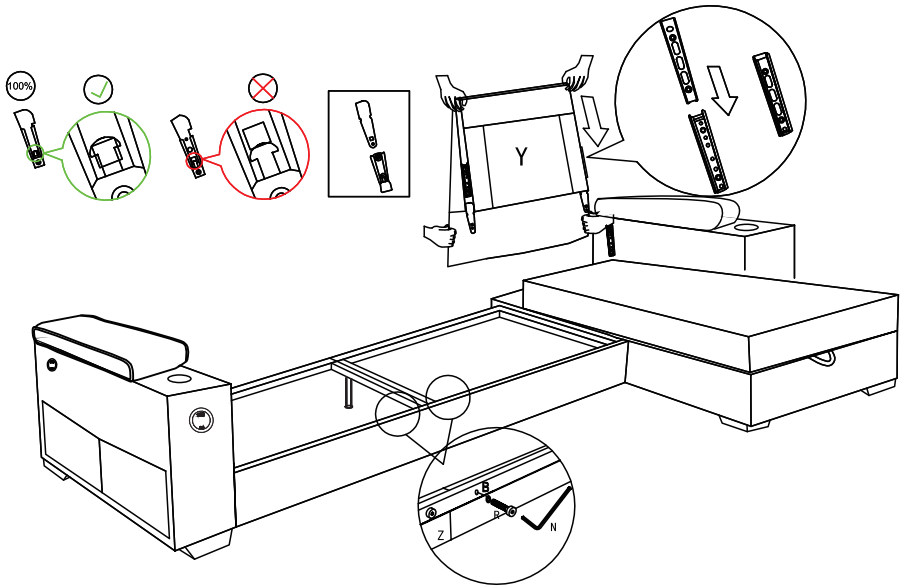

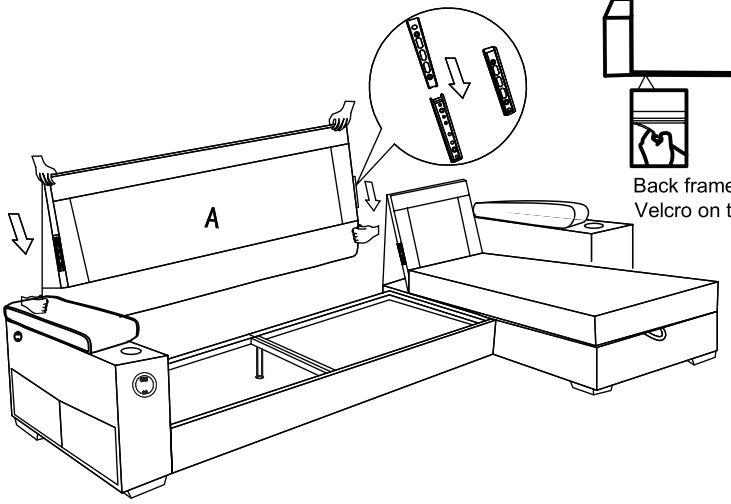

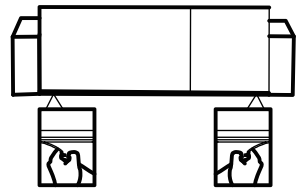

Back frame jacket back seal
Velcro on the back link

step14

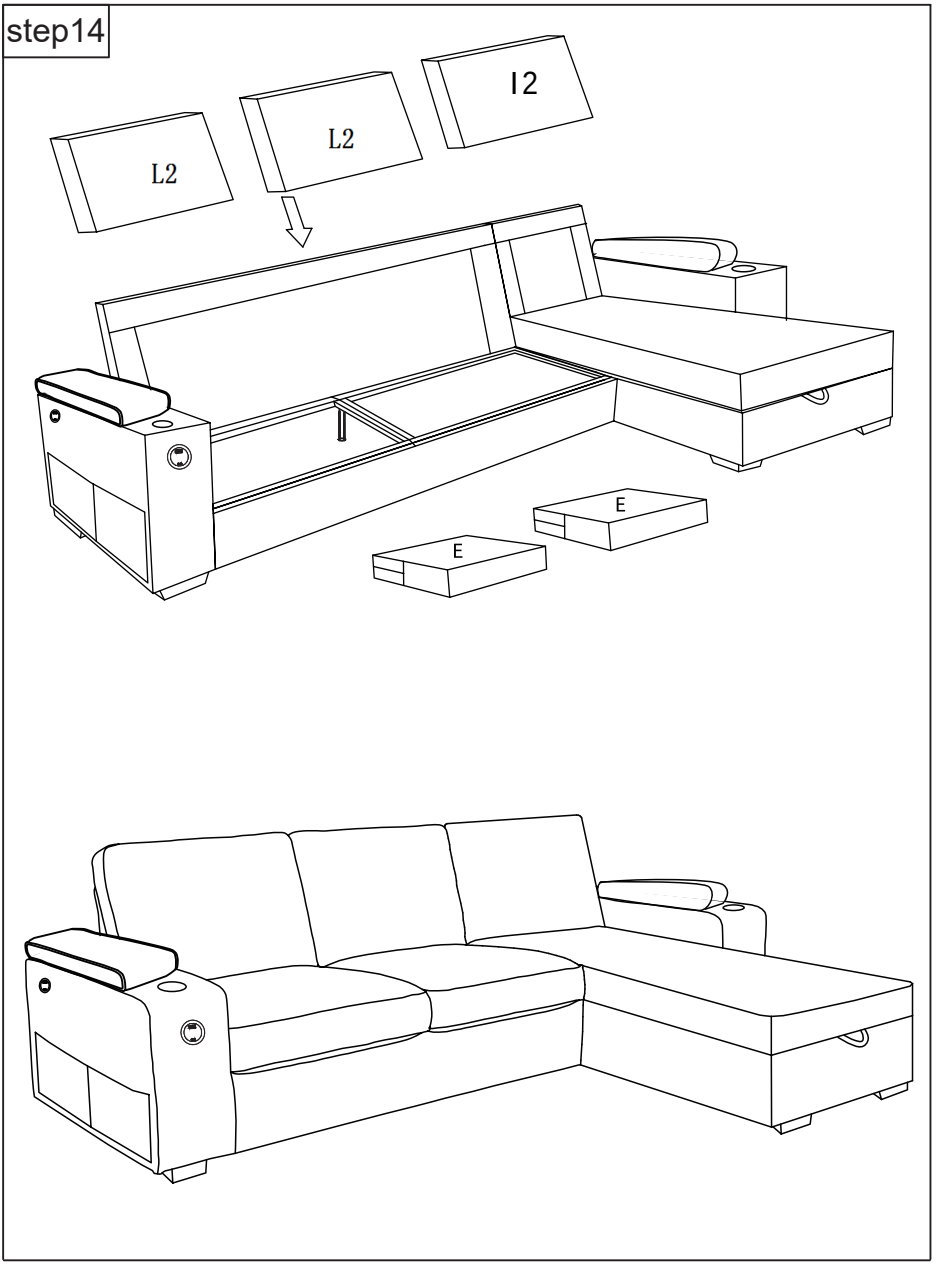

step15

Dear Customer, the combination of the sofa you purchased is left side facing arm loveseat and right side facing arm chaise, if you want to change the combination of the right side facing arm loveseat and left side facing arm chaise, please follow the following steps:1~8

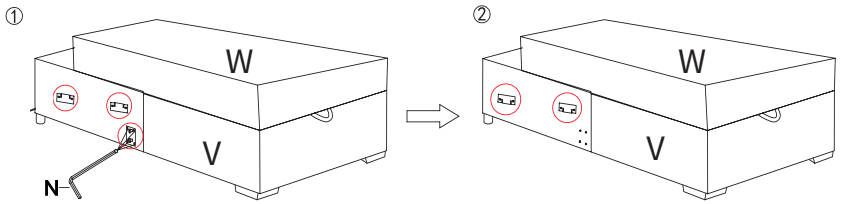

The left rear connecting rod sleeve and the seat front plate insert are removed and instaled in the same position on the right。

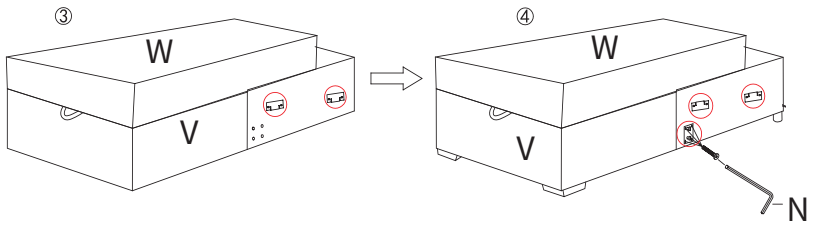

INSTALLATION INSTRUCTIONS

step16

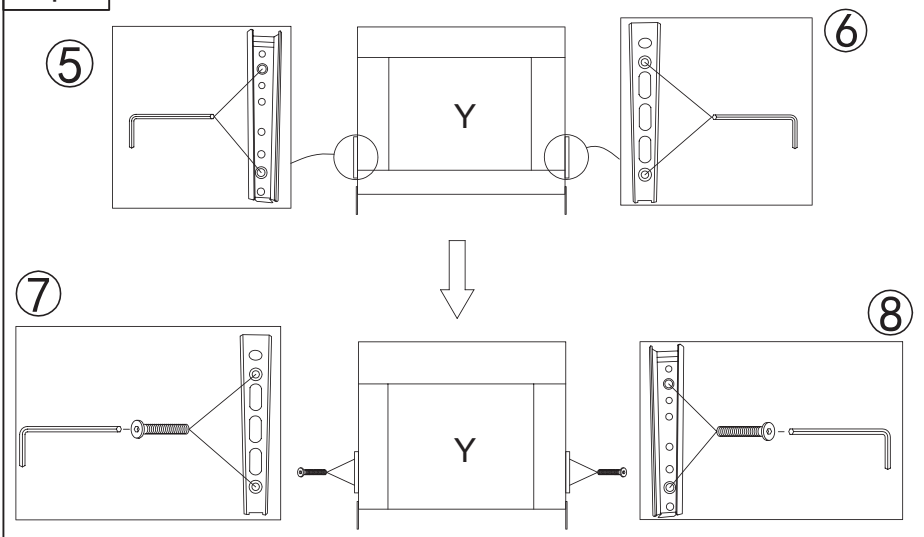

Right side facing arm chaise's back bracket plug-in is interchangeably assembled into the left side facing arm chaise's back bracket

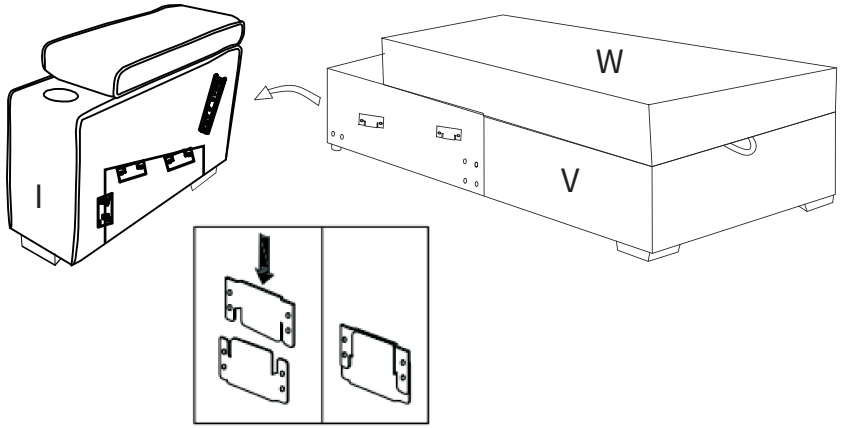

step17

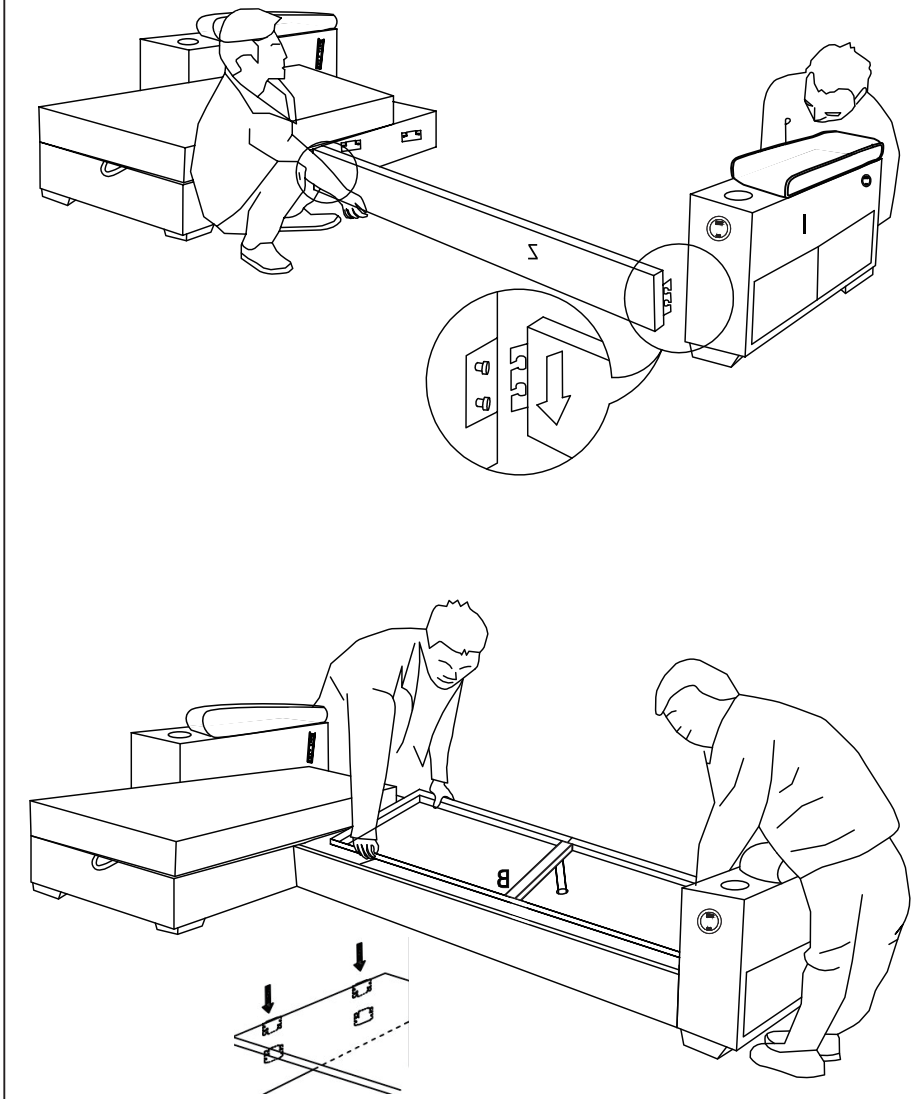

step18

Back frame jacket back seal
Velcro on the back link

step19

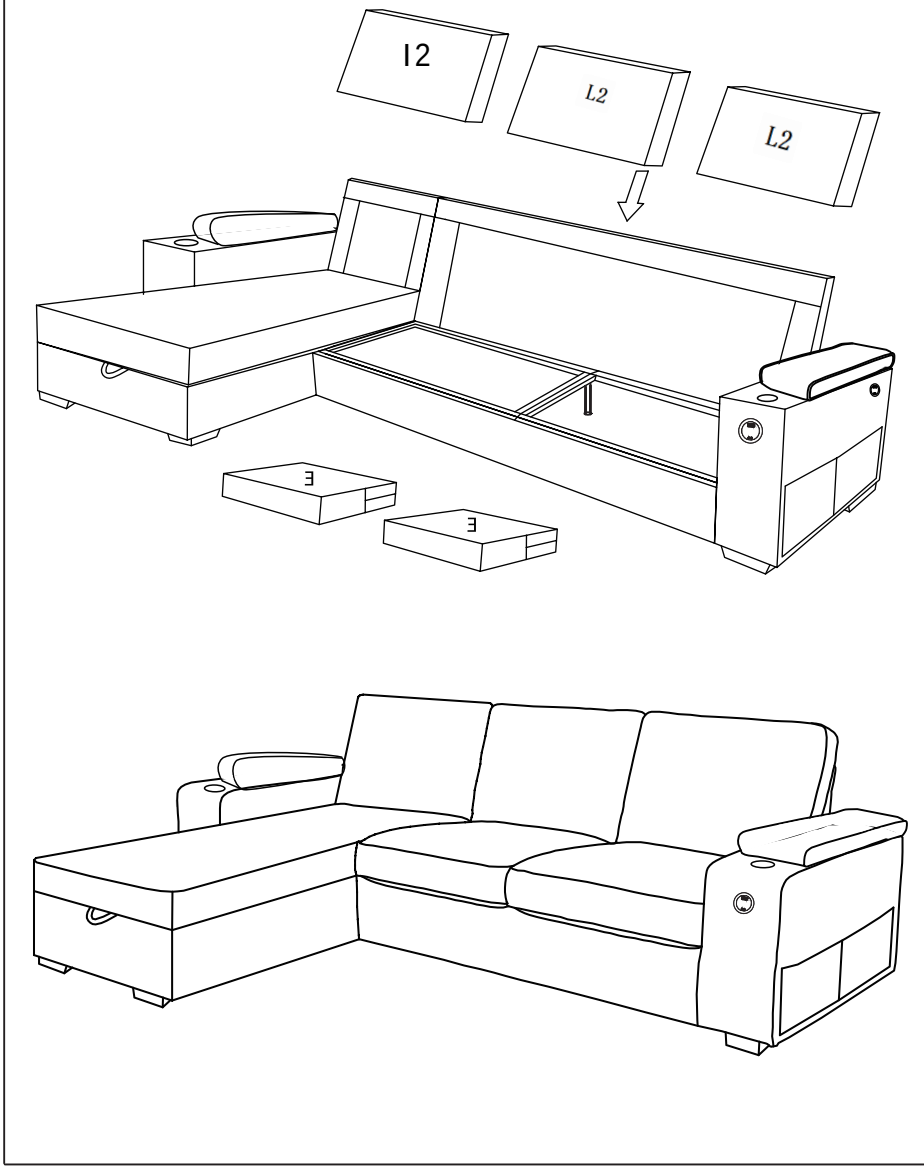

step20

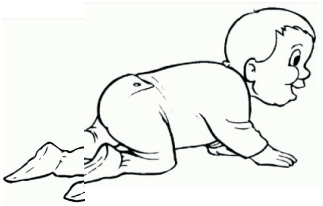

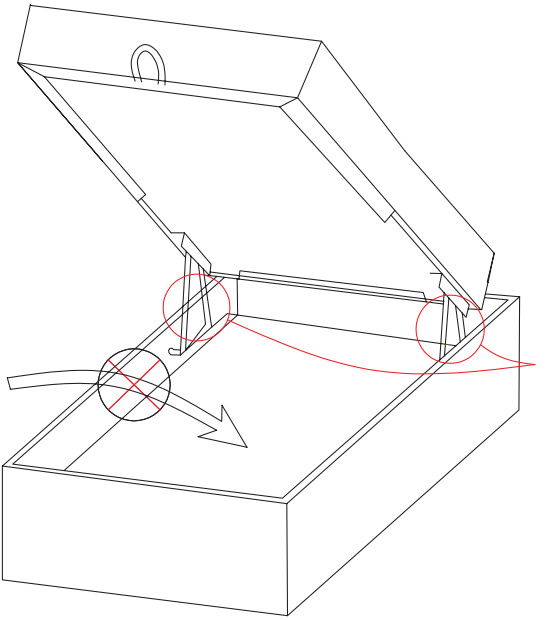

WARNING!

TO AVOID DANGER OF SUFFOCATION,CHILDRE SHOULD NOT CRAWL INTO THE STORAGE BOX.

WARNING!



Do not put your hand on the movable part of the product when opening and closing,it may cause injury.please be careful not to let children use it alone.



BASIC PRODUCT PARAMETERS

BRAND NAME	CHENIER FABRIC COMBINATION SOFA
SIZES	301CMX164CMX83CM

UNPACKING LIST

LOVESEAT

BOX-A

A	B	C	D	E
 x1	 x1	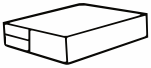 x2	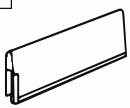 x1	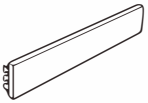 x1
Back bracket	Seat frame	Seat cushion	Backrest cover	Foreseat plate

BOX-B

F	G	H	I	J
 x1	 x1	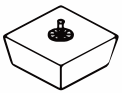 x4	 x2	 x1
Handrail	Handrail	Feet	Back cushion	Power cord

K	L	M	N	N
 M6 x1	 x1	 x2	 M8*35mm x8	
Allen Key	Middle leg	Handrail bottom plate	Bolt	Flat Washer 8pcs

CHAISE

	Q	R	S	T
 x1	 x1	 x1	 x2	
Chaise back cushion	Chaise Seat frame	Chaise seat cushion	Feet	Chaise Back bracket

U	H	W	W	I2
 x1	 x2	 M6*35mm x1		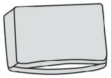 x1
Allen Key	Feet	Bolt	Flat Washer 1pcs	Back cushion cover

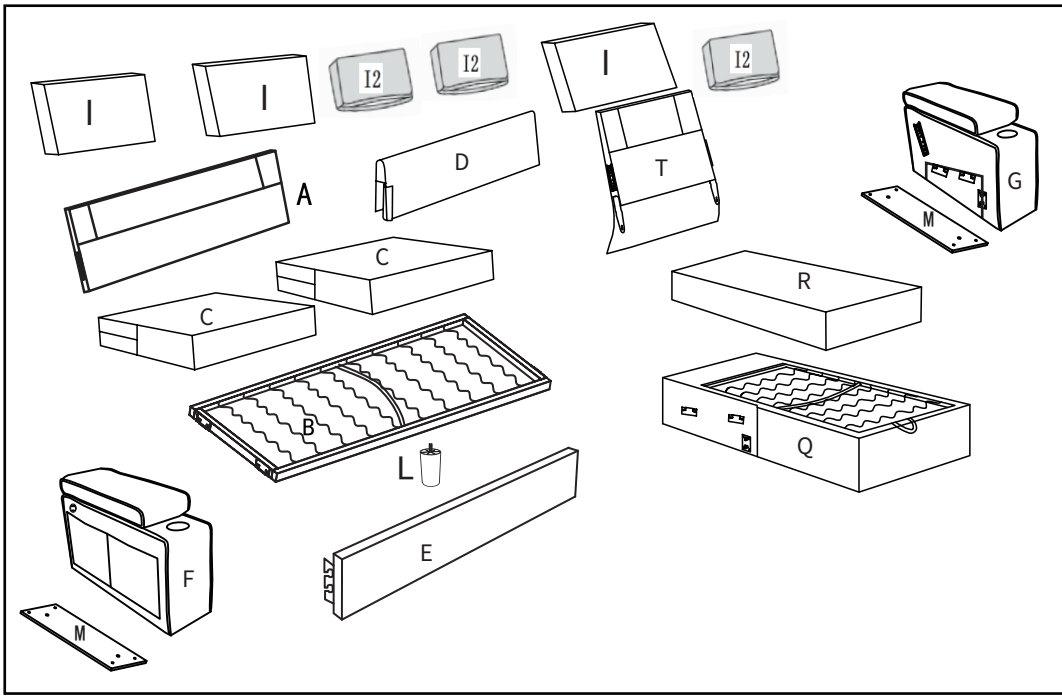
I
I
I2
I2
I
I2
A
D
T
G
M
C
C
R
B
L
Q
E
F
M

INSTALLATION INSTRUCTIONS

step1

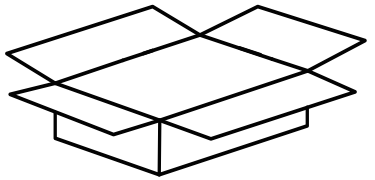



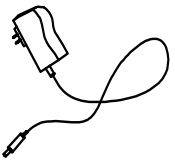

J x1

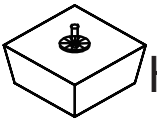

H x4



L x1



K x1

1、Seat and back cushions may take 24-48 hours to fully expand, which will allow wrinkles and indentations caused by packing to fade.

2、To close the zipper, please follow diagram 1. Failure to follow this could result in damage to the zipper.

INSTALLATION INSTRUCTIONS

step2

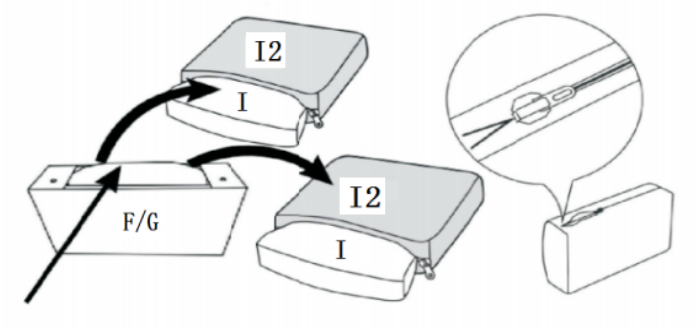

Back cushion interior are in the armrest frame, first you should take out then tuck it in cover

step3

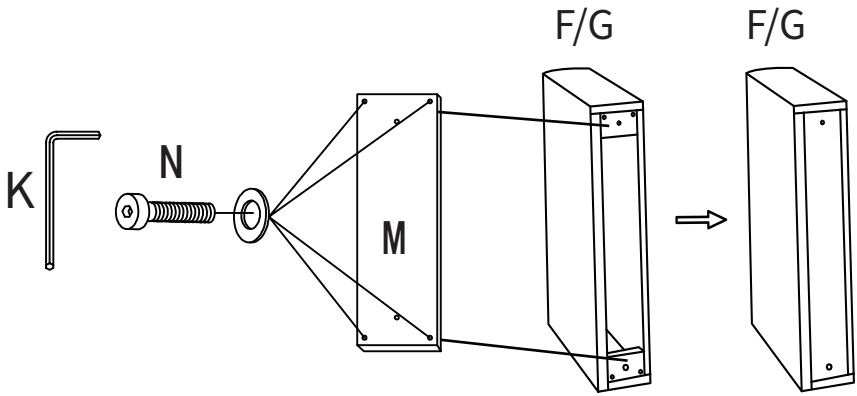

step4

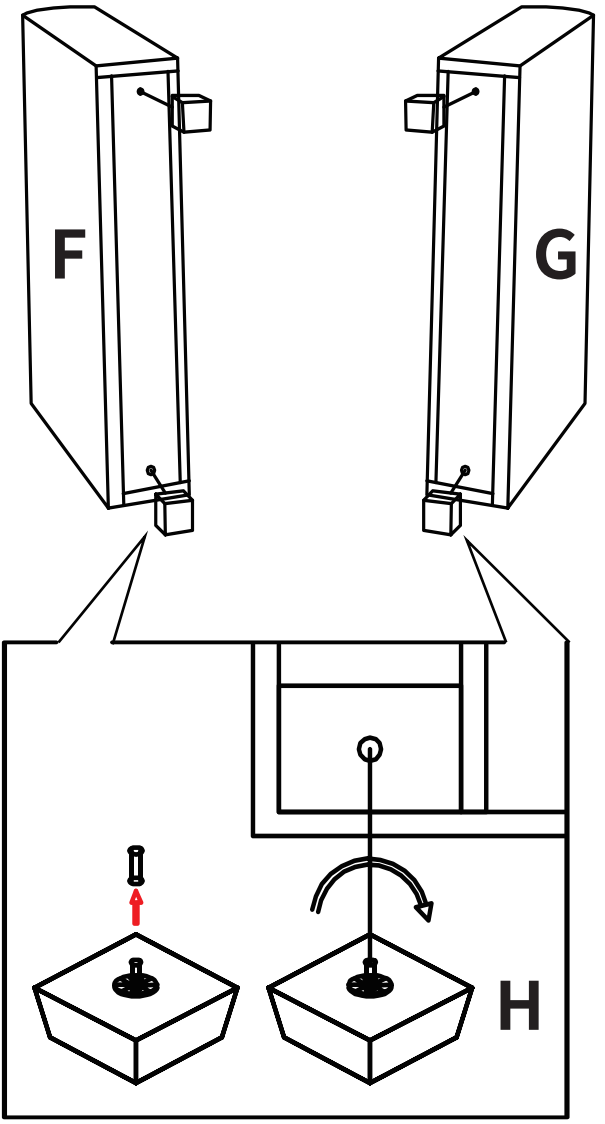

INSTALLATION INSTRUCTIONS

step5

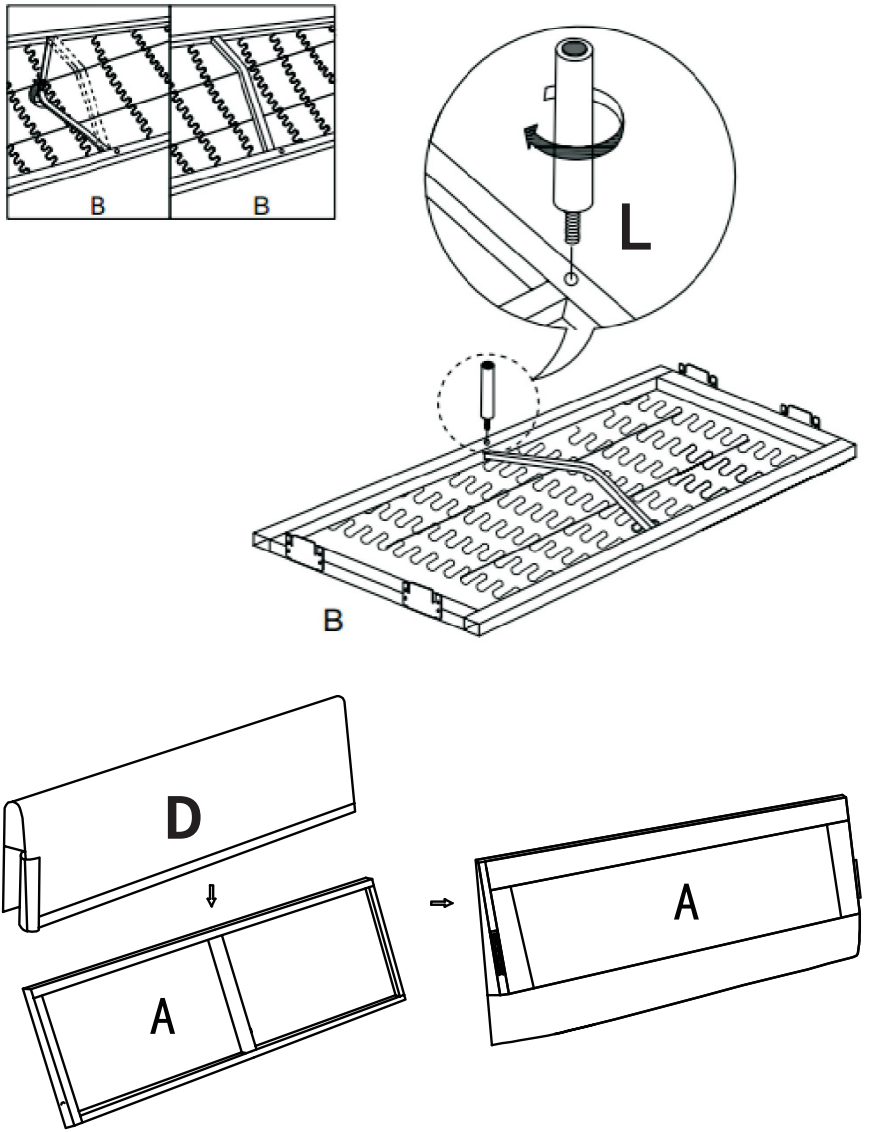

step6

How to use control panel that outside of right armrest?

Control panel hasdual USB outlets.....(5V2A+TypeC) that keep your devices charging, such as neariy all smartphone(like iPhone, Samsung..), ipad, headphones, kindle..

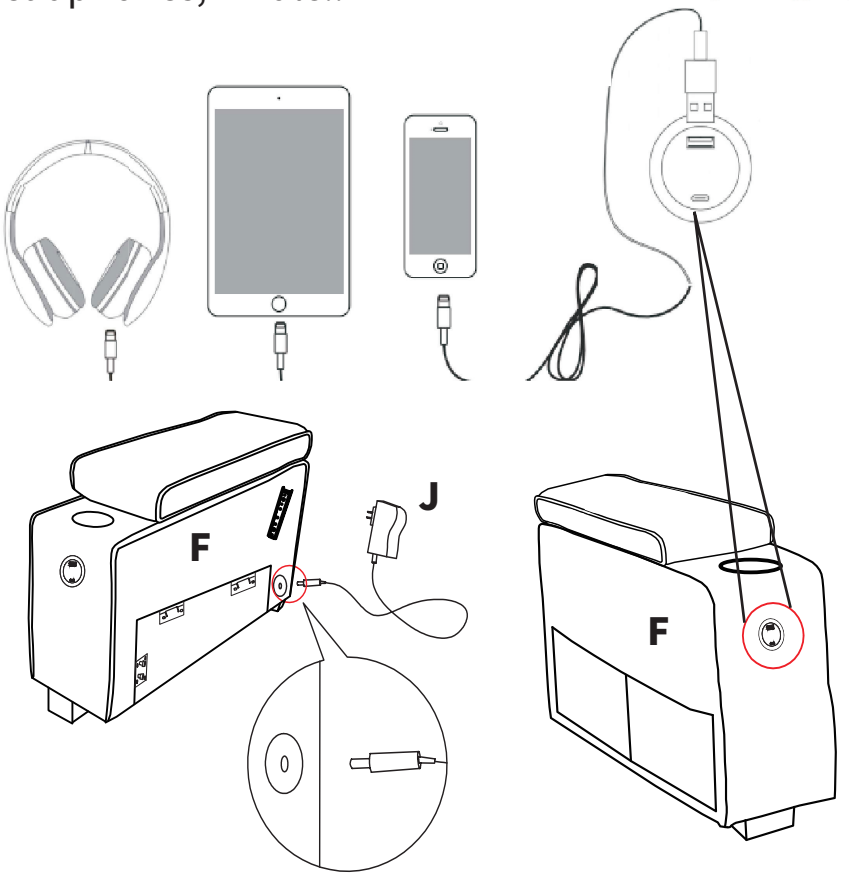

INSTALLATION INSTRUCTIONS

step7

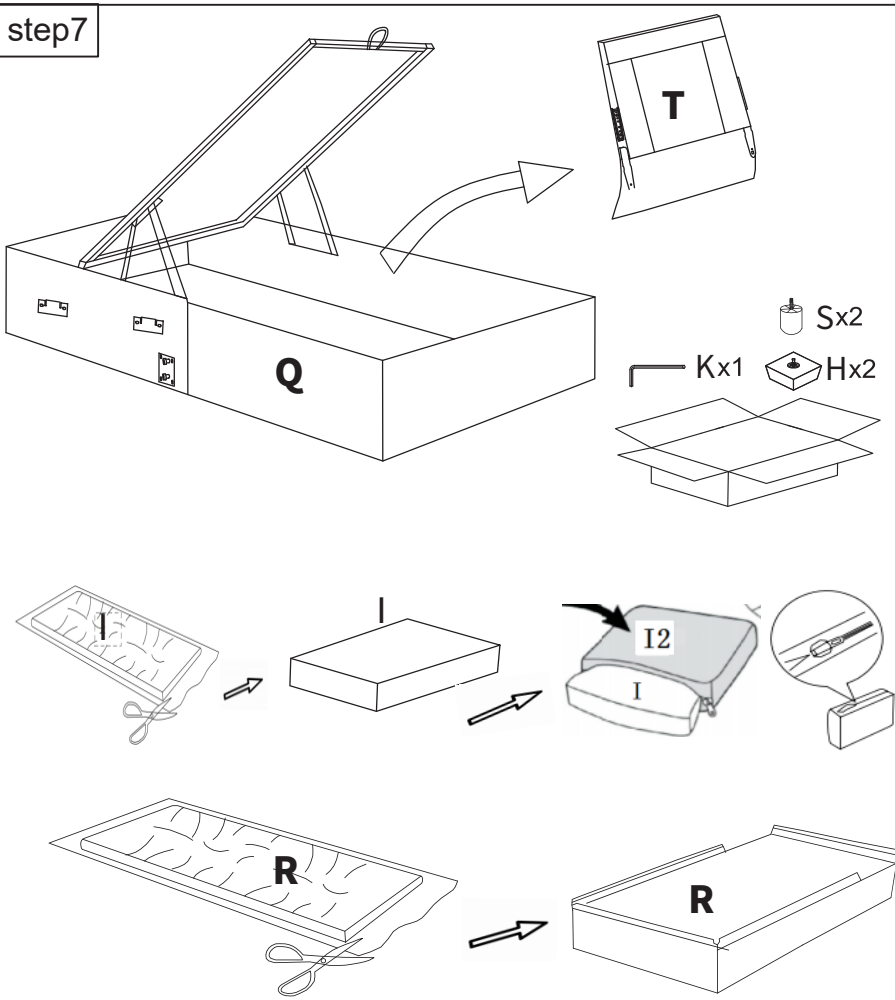

Seat and back cushions may take 24-48 hours to fully expand, which will allow wrinkles and indentations caused by packing to fade.

INSTALLATION INSTRUCTIONS

step8

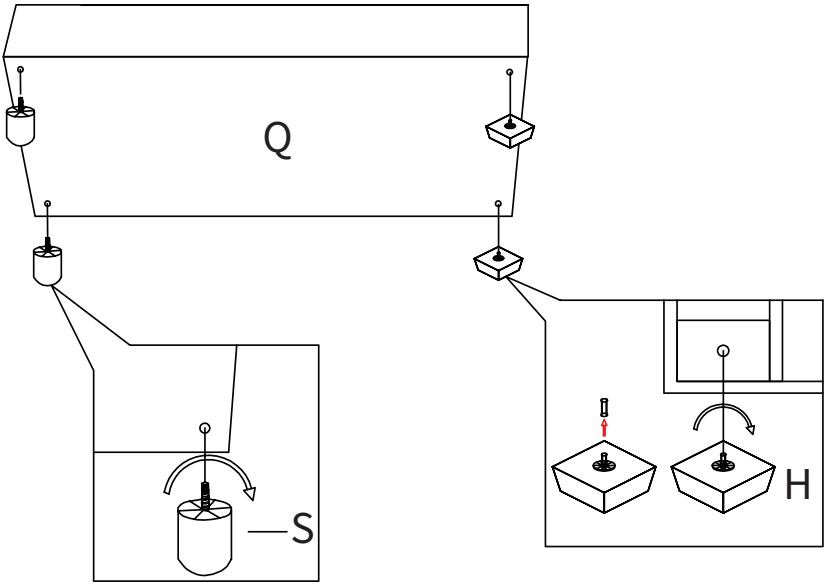

step9

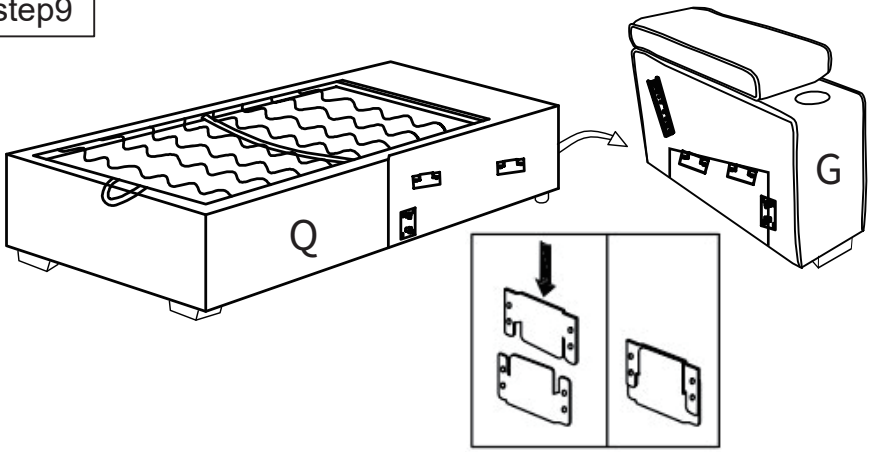

step10

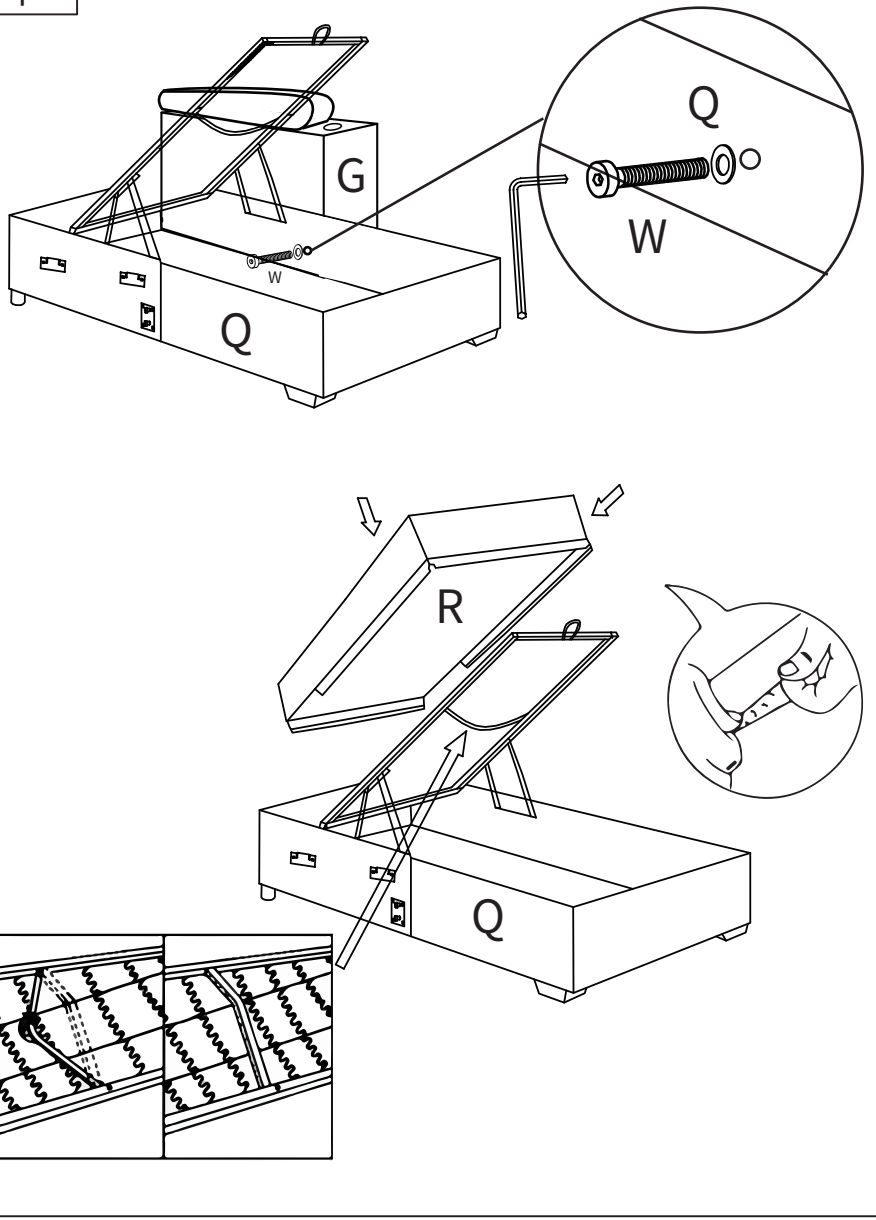

step11

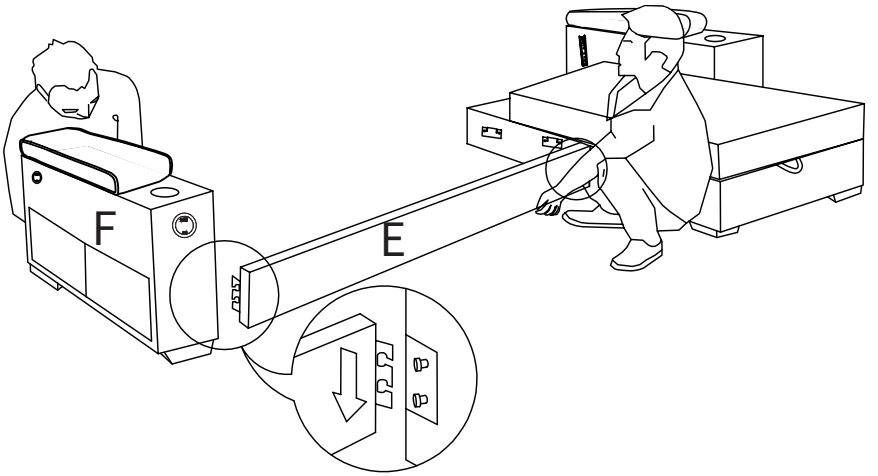

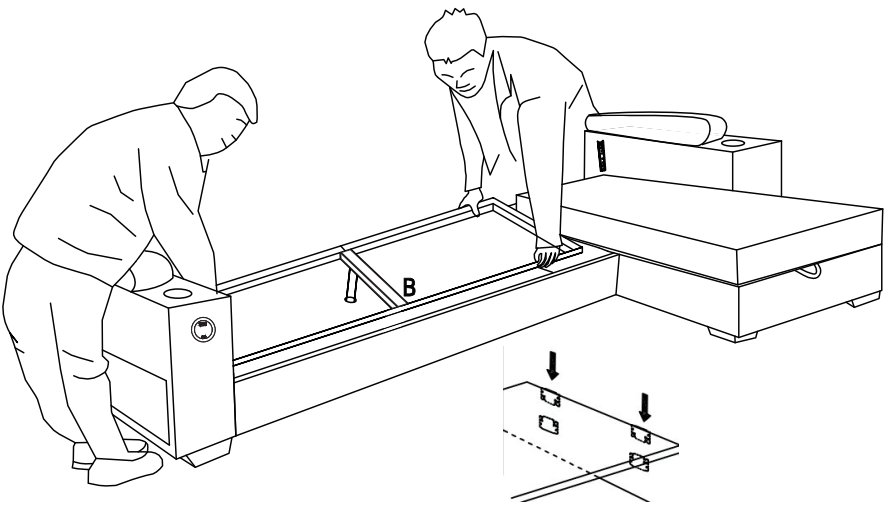

step12

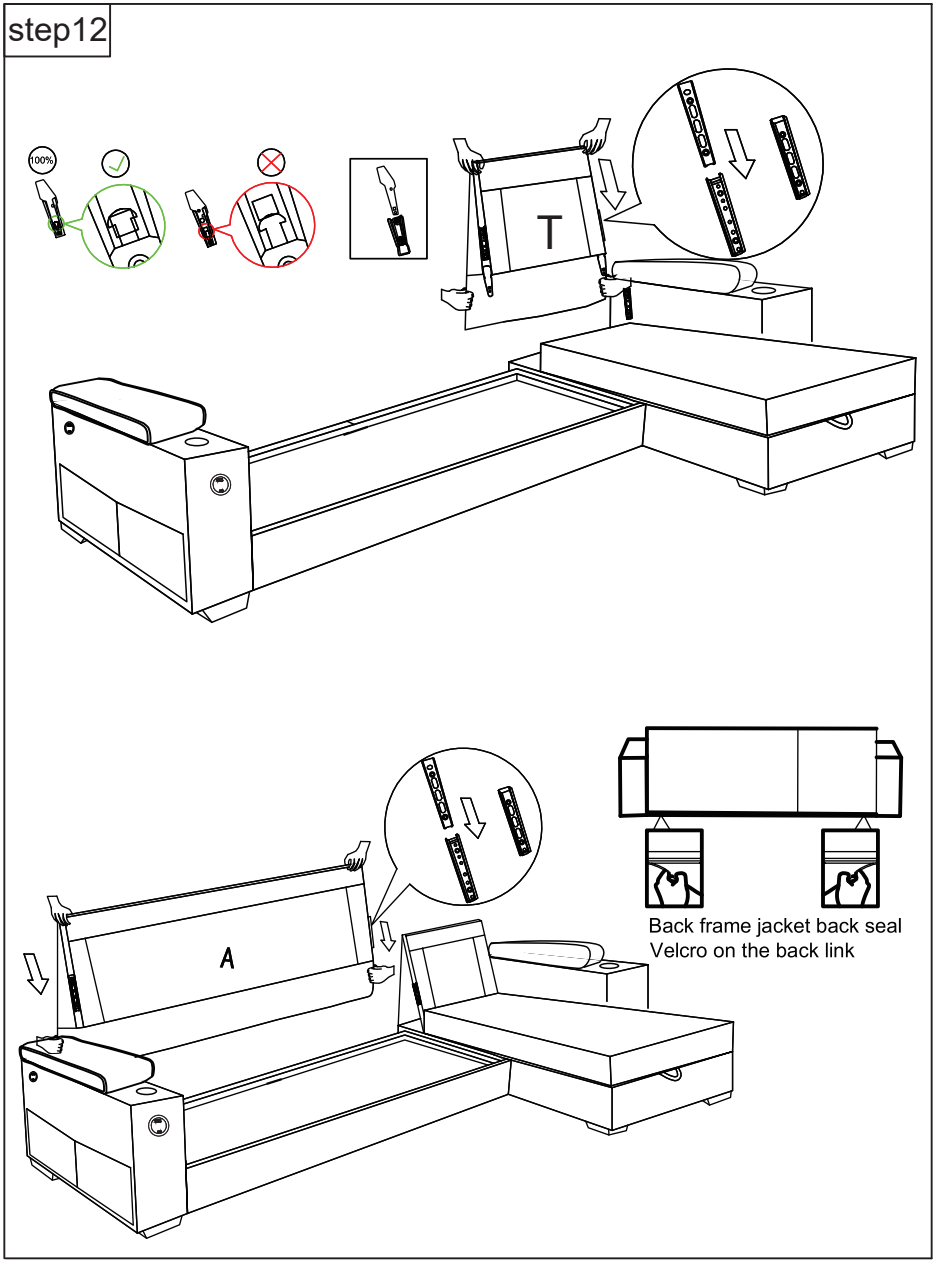

INSTALLATION INSTRUCTIONS

step13

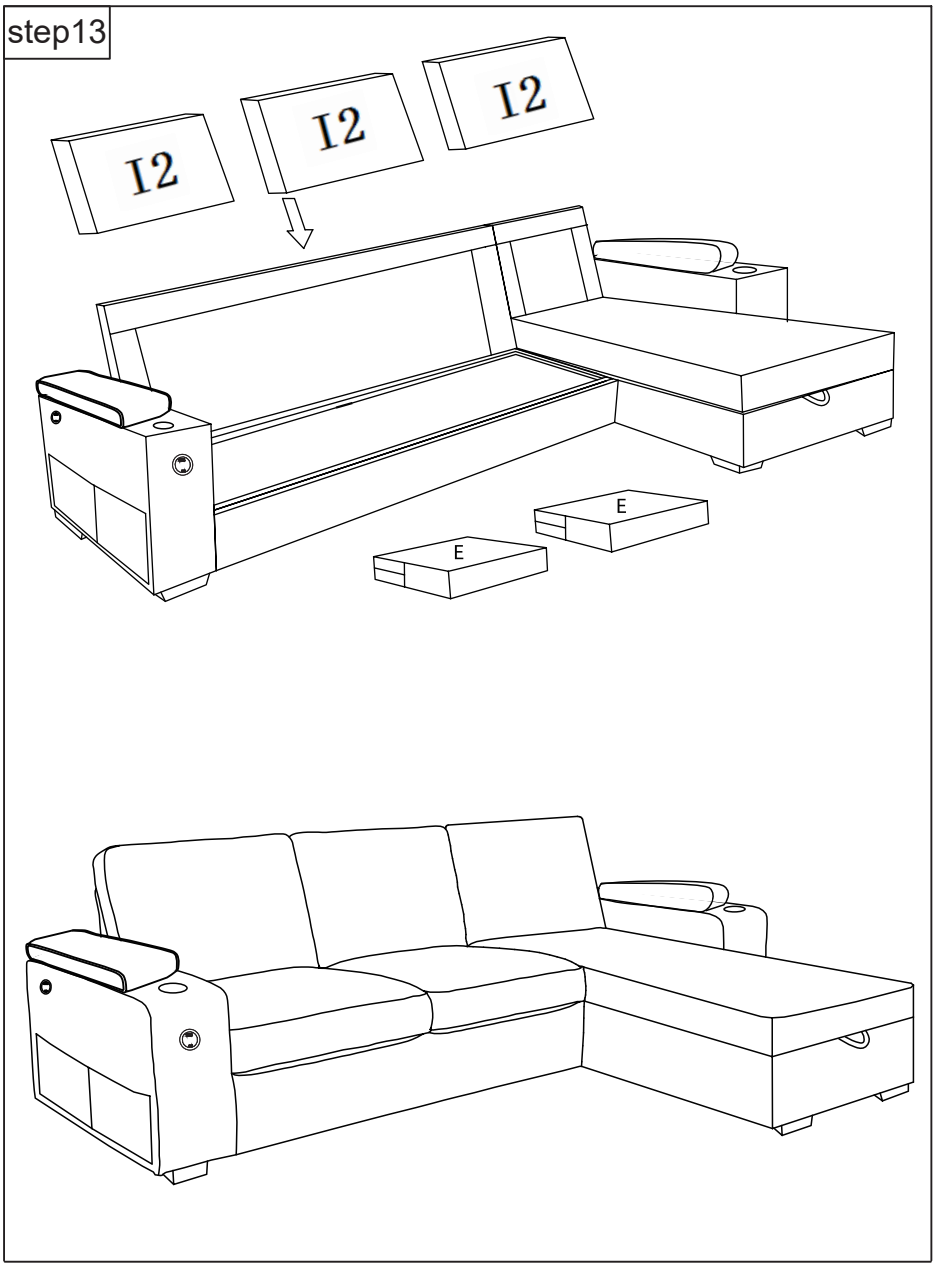

step14

Dear Customer, the combination of the sofa you purchased is left side facing arm loveseat and right side facing arm chaise, if you want to change the combination of the right side facing arm loveseat and left side facing arm chaise, please follow the following steps:1~8

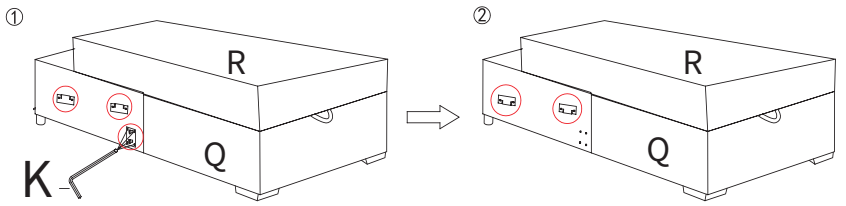

The left rear connecting rod sleeve and the seat front plate insert are removed and instaled in the same position on the right。

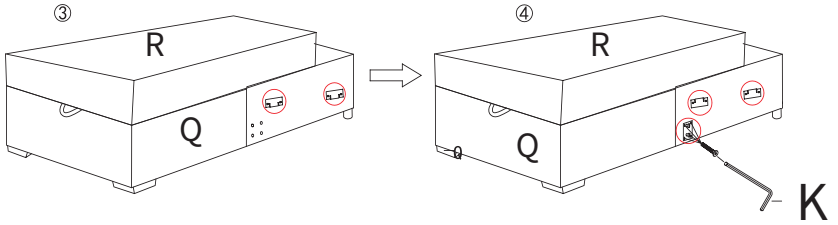

INSTALLATION INSTRUCTIONS

step15

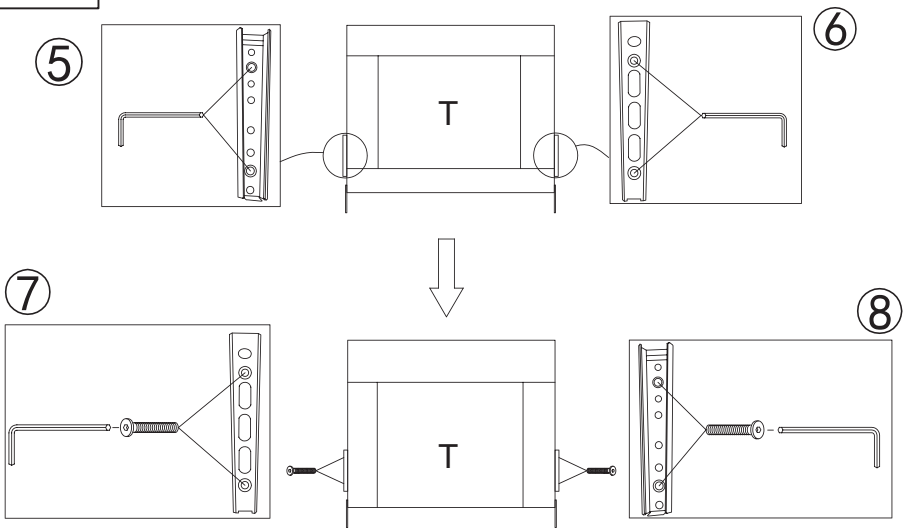

Right side facing arm chaise's back bracket plug-in is interchangeably assembled into the left side facing arm chaise's back bracket

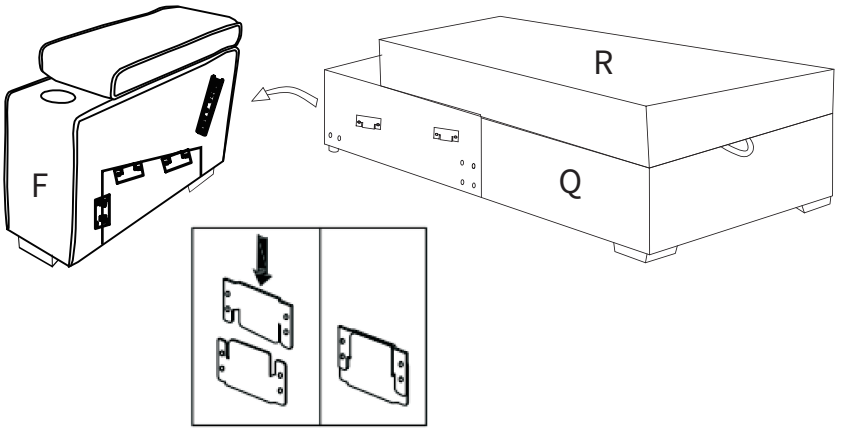

step16

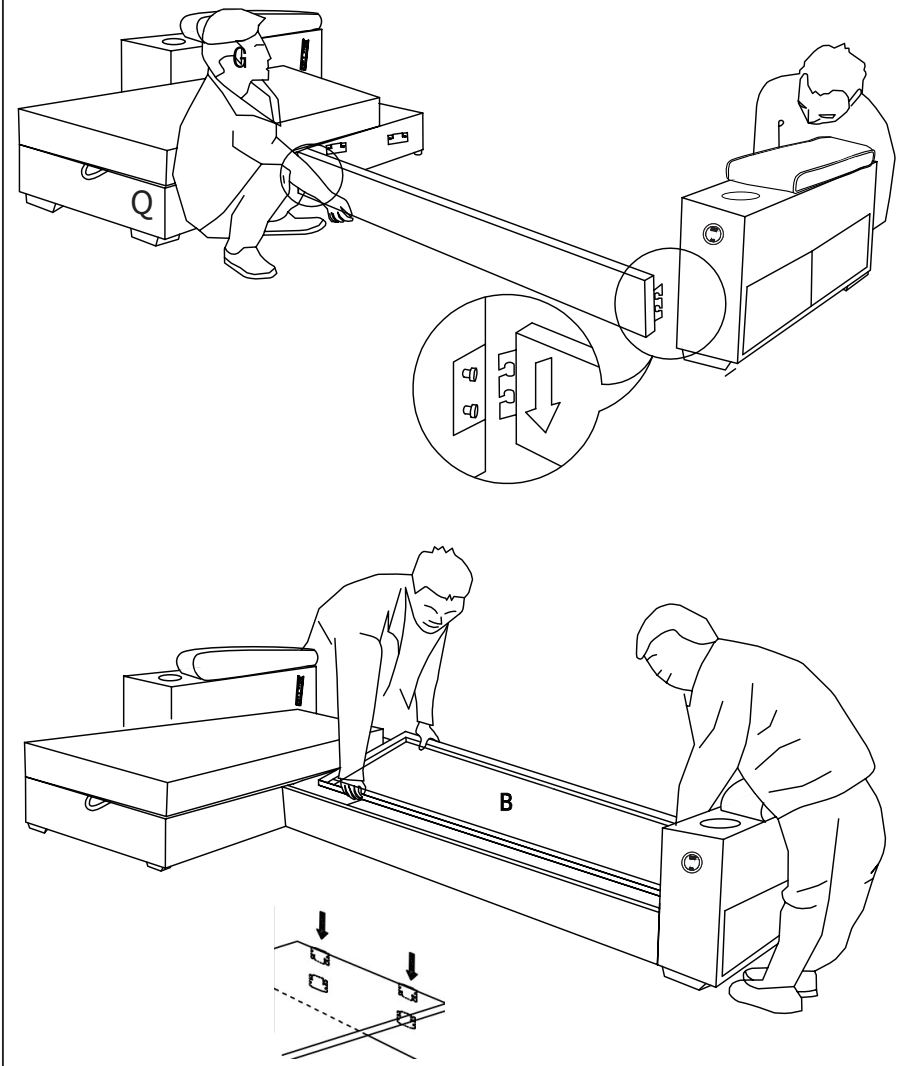

step17

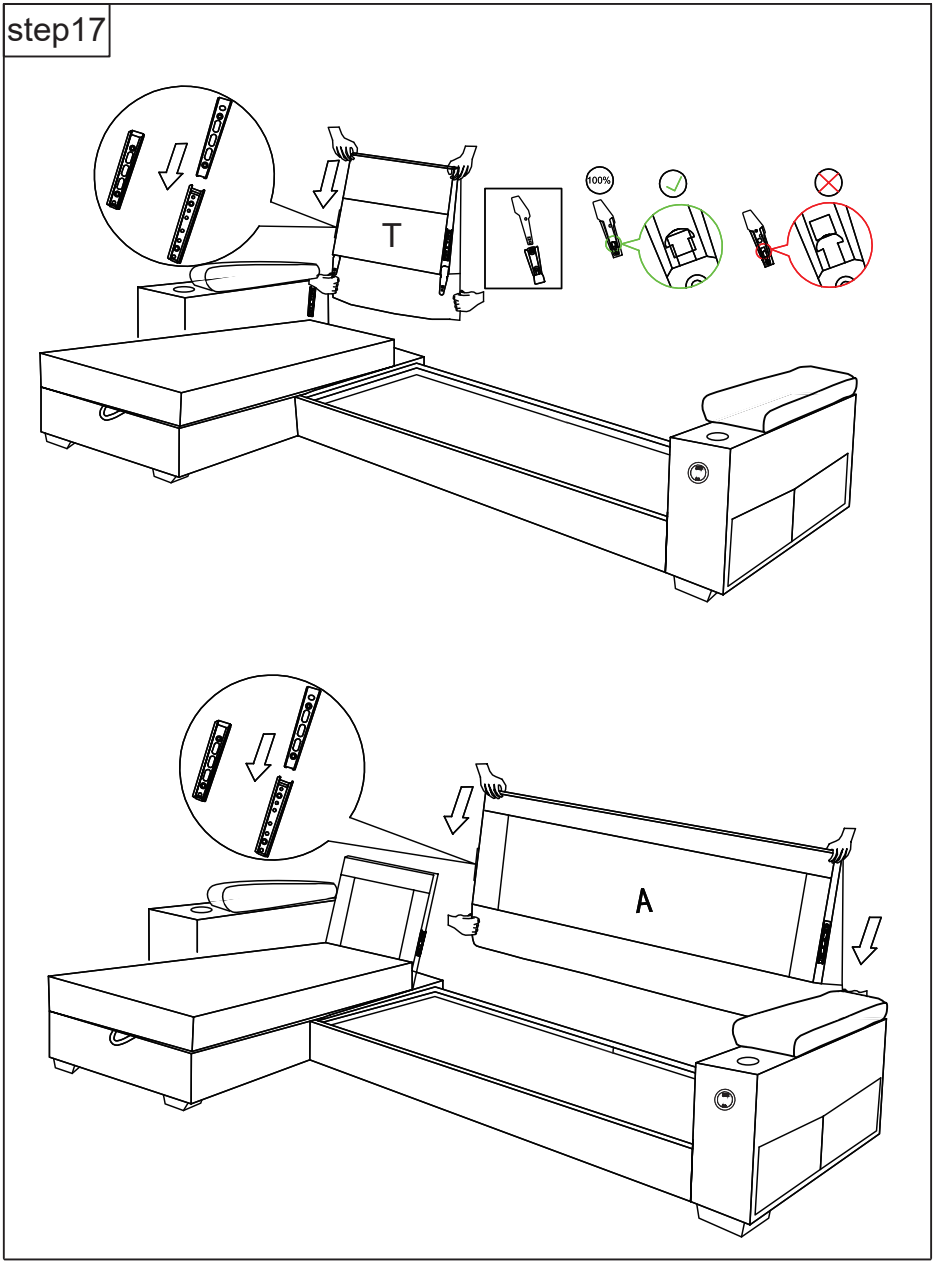

step18

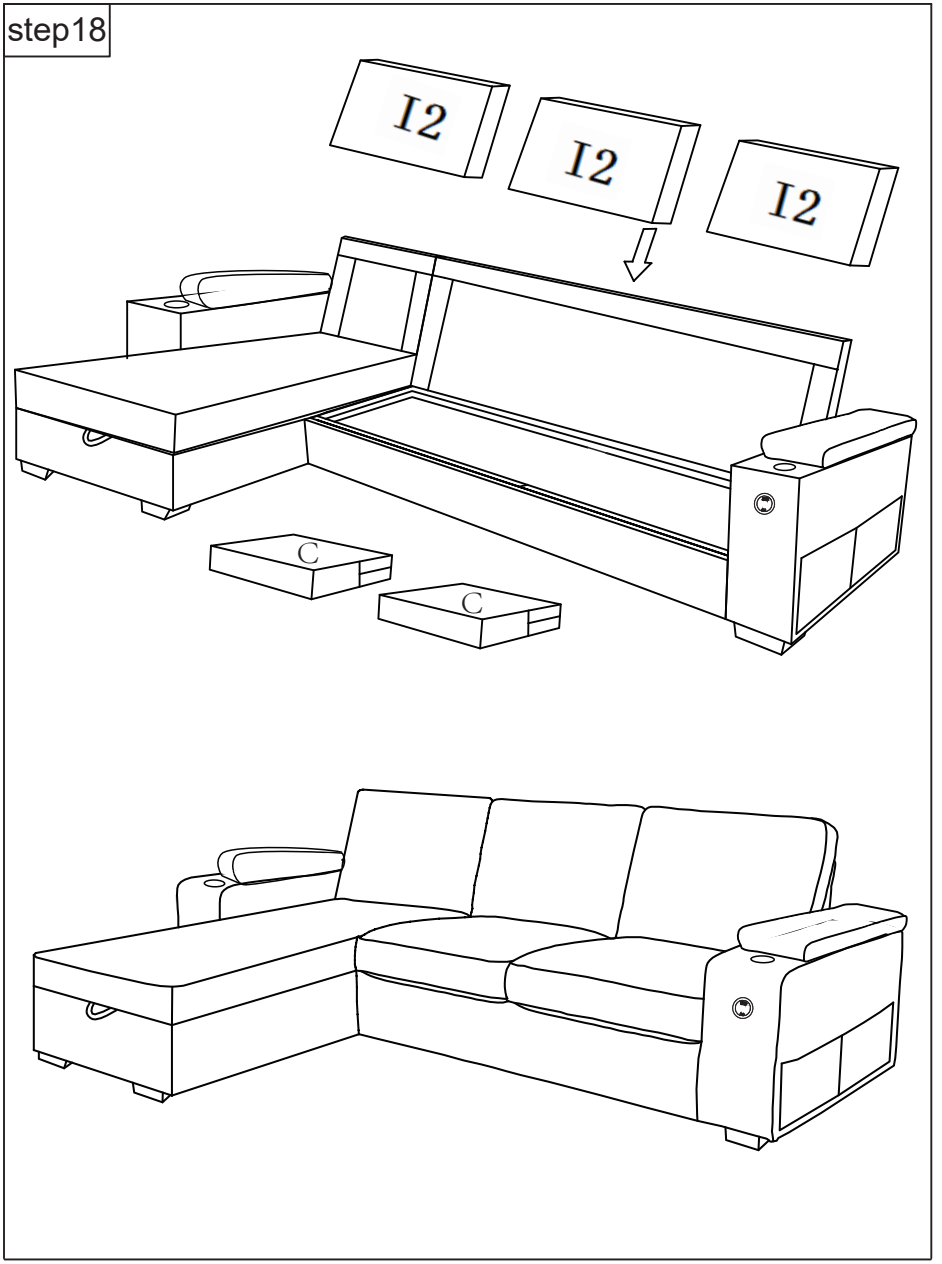

step19

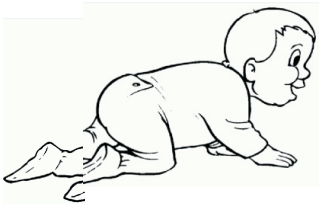

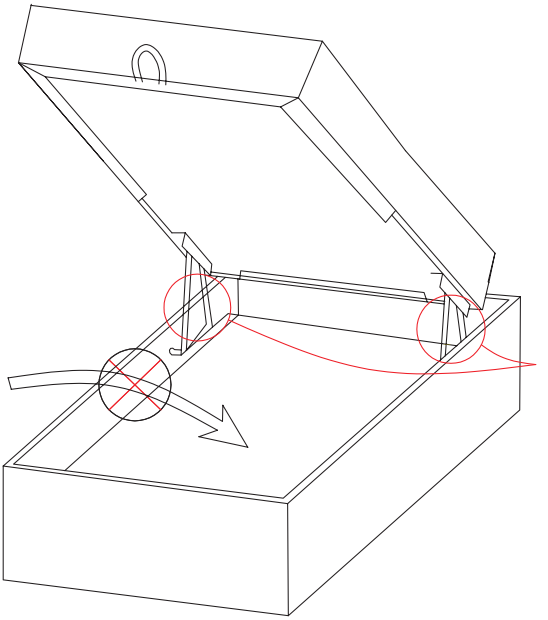

WARNING!

TO AVOID DANGER OF SUFFOCATION,CHILDRE SHOULD NOT CRAWL INTO THE STORAGE BOX.

WARNING!



Do not put your hand on the movable part of the product when opening and closing,it may cause injury.please be careful not to let children use it alone.



TRANSPORT AND INSTALLATION

1. The sofa should be especially protected against rain, moisture and crushing by heavy objects during transportation, in order to avoid quality problems during use.
2. Please make sure that the sofa has the safe access required for its entry before it enters your place of use.
3. Sofas are mainly fixed installation, a few are dismantling sofas. When purchasing a sofa, please give full consideration to the size of the door frame and the movable space of the entrance door. If necessary, ask a professional to disassemble the sofa and reassemble it after entering the house, so that it will not damage the sofa's internal structure, seating sensation and surface effect.

CAVEAT

Please read all instructions before use.
If in any doubt about safety, contact a specialized technician for inspection. When using this product, basic safety precautions must be observed to avoid the risk of injury to persons, including the following.
1. Do not use this product in high humidity environments.
2. Do not store or use this product outdoors or in direct sunlight.

3. Someone must be present to watch over children, disabled people or people with reduced mobility when they are near or using the sofa.
4. After using the sofa, please turn off the on/off function of the backrest/footrest completely before getting up to avoid accidents.
5. Do not sit on the footrest when using the massage sofa to avoid accidents.
6. Do not try to stand on the armrests or backrests to avoid the massage sofa toppling over, this may cause an accident.
7. Always keep the sofa clean and avoid inserting other objects into the gap of the sofa.
8. Please ensure that there are no other obstacles under the footstool or backrest when lowering it, especially for children.
It is not recommended that children use the appliance alone. The following aspects must be considered.
1. Do not allow children to play freely on the sofa alone without adult supervision to be! Limbs may get caught in the seams of the product and the sofa may tilt and cause the child to fall.
2. Do not leave children unattended near the sofa when it opens and closes to avoid unnecessary injuries.

METHODS OF CARE

1. Avoid placing the sofa in direct sunlight above 30°C. Every 10-15 days, use a vacuum cleaner to remove dust etc. and clean the entire sofa.
2. Remove stains as soon as they are stained and avoid scratching or other damaging treatments, thus permanently maintaining the quality of the fabric surface. The surface of the sofa can be covered with a tight-fitting protective cover. When stained with ink-like stains, wipe with a soft white cloth or absorbent paper.
3. If a solvent is to be used to remove a stain, avoid applying it directly to the stain, but pour it onto a clean cloth first and then try to clean the hidden areas on the back. The stain should be wiped in a circular motion from the outside in until it is completely removed. Immediately after wiping, a low-power hair dryer should be used to dry the clean area from the outside in.
4. Be gentle and careful when wiping stains and spots, do not use excessive force. The massage sofa can be covered with a removable, tight-fitting protective cover.
5, If you have covered the sofa with a tight-fitting protective cover, please follow the instructions listed on the cover and clean it with a cleaner that does not contain bleach or oxidizing agents. Other-

rwise the texture and color of the fabric will change.
6. Vacuum regularly:
Vacuum once a week, paying special attention to removing dust between fabric folds. If there are stains, wipe with a dampened clean cloth to avoid leaving traces, preferably from the edge of the stain.
7. How to clean effectively:
Generally speaking, a soft cotton cloth can be moistened with a 1:10 soap flake solution or 1:20 advanced shampoo, wrung out and gently wiped the stained area. If the stain is too heavy, repeat the process a few times and the stain will be removed. Don't use too much force or the fabric will fade.
8, How to remove stubborn stains:
If the sofa is stuck with chewing and other gelatinous substances, use an ice pack or ice water to cool it down, and then gently wipe it off with a fine silk cloth.