Insrallation Instruction

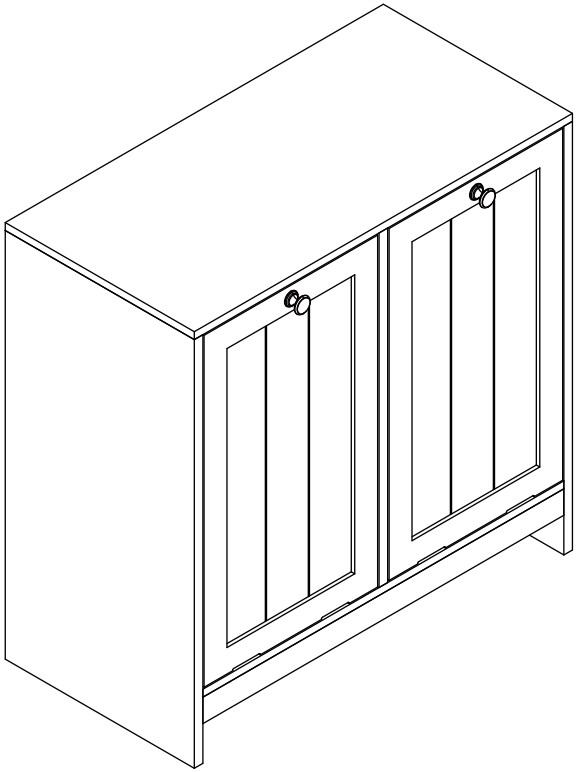

EN

1.Place all parts on a clean, flat, and soft surface (e.g., carpet or rug) to prevent scratches.
2.DO NOT USE POWER TOOLS FOR ASSEMBLY.
3.Do not sit, stand, or allow children to climb, sit, or stand on the assembled product.
4.KEEP ALL HARDWARE PARTS OUT OF CHILDREN'S REACH.
5.DISPOSE OF PLASTIC PACKAGING IMMEDIATELY TO PREVENT SUFFOCATION RISKS TO CHILDREN OR PETS.
6.For safety reasons, this unit must be securely mounted to the wall.
7.Assembly requires two people.

DE

1.Legen Sie alle Teile auf eine saubere, flache und weiche Oberfläche (z. B. Teppich oder Matte), um Kratzer zu vermeiden.
2.VERWENDEN SIE KEINE ELEKTROWERKZEUGE FÜR DEN ZUSAMMENBAU.
3.Setzen oder stellen Sie sich nicht auf das montierte Produkt, und lassen Sie Kinder nicht darauf klettern, sitzen oder stehen.
4.HALTE ALLE HARDWARETEILE AUSSERHALB DER REICHWEITE VON KINDERN.
5.ENTSORGEN SIE KUNSTSTOFFVERPACKUNGEN SOFORT, UM ERSTICKUNGSRISIKEN FÜR KINDER ODER HAUSTIERE ZU VERMEIDEN.
6.Aus Sicherheitsgründen muss diese Einheit sicher an der Wand befestigt werden.
7.Für den Zusammenbau werden zwei Personen benötigt.

FR

1.Placez toutes les pièces sur une surface propre, plate et molle (par exemple, un tapis ou une moquette) pour éviter les rayures.
2.N'UTILISEZ PAS D'OUTILS ÉLECTRIQUES POUR LE MONTAGE.
3.Ne vous asseyez pas, ne vous tenez pas debout et ne laissez pas les enfants grimper, s'asseoir ou se tenir debout sur le produit assemblé.
4.GARDEZ TOUTES LES PIÈCES DE QUINCAILLERIE HORS DE PORTÉE DES ENFANTS.
5.ÉLIMINEZ IMMÉDIATEMENT LES EMBALLAGES PLASTIQUES POUR ÉVITER TOUT RISQUE D'ÉTOUFFEMENT POUR LES ENFANTS OU LES ANIMAUX DOMESTIQUES.
6.Pour des raisons de sécurité, cette unité doit être solidement fixée au mur.
7.Le montage nécessite deux personnes.

ES

1.Coloque todas las partes sobre una superficie limpia, plana y suave (por ejemplo, alfombra o tapete) para evitar rayaduras.
2.NO UTILICE HERRAMIENTAS ELÉCTRICAS PARA EL ENSAMBLAJE.
3.No se siente, no se pare ni permita que los niños se suban, se sienten o se paren sobre el producto ensamblado.
4.MANTENGA TODAS LAS PIEZAS DE HERRAMIENTA FUERA DEL ALCANCE DE LOS NIÑOS.
5.DESECHE INMEDIATAMENTE LOS ENVASES DE PLÁSTICO PARA EVITAR CUALQUIER RIESGO DE ASFIXIA PARA NIÑOS O MASCOTAS.
6.Por razones de seguridad, es imprescindible que esta unidad esté fijada a la pared.
7.Se necesitan dos personas para el ensamblaje.

0-3 UK CA

MADE IN CHINA

IT

1.Posizionare tutte le parti su una superficie pulita, piana e morbida (ad esempio, tappeto o moquette) per evitare graffi.
2.NON UTILIZZARE UTENSILI ELETTRICI PER IL MONTAGGIO.
3.Non sedersi, non stare in piedi e non permettere ai bambini di arrampicarsi, sedersi o stare in piedi sul prodotto assemblato.
4.TENERE TUTTE LE PARTI DI FERRAMENTA FUORI DALLA PORTATA DEI BAMBINI.
5.SMALTIRE IMMEDIATAMENTE GLI IMBALLAGGI DI PLASTICA PER EVITARE QUALSIASI RISCHIO DI SOFFOCAMENTO PER BAMBINI O ANIMALI DOMESTICI.
6.Per motivi di sicurezza, è imperativo che questa unità sia fissata al muro.
7.Per il montaggio sono necessarie due persone.

WARNING!!

Children have died from furniture tipover. Tip restraints have been included with this product; you must install the tip restraints according to these instructions in order to minimize the risk of furniture tipping.

In addition to installing the restrains , to help prevent tip- over
1. NEVER put a TV or other heavy objects on top of this product".
2. Do not stand on the product.

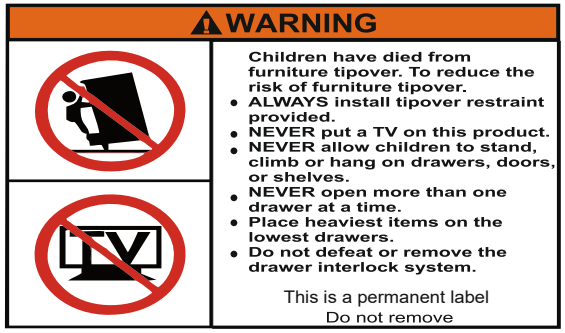

Assembly Instructions

LAUNDRY HAMPER CABINET

CARE INSTRUCTION: WIPE CLEAN WITH A SOFT DRY OR DAMP CLOTH. KEEP AWAY FROM WATER AND DIRECT SUNLIGHT. FOR INDOOR AND DOMESTIC USE. CHECK AND TIGHTEN ALL PARTS REGULARLY.

WARNING: THIS PRODUCT MUST BE ATTACHED TO THE WALL TO HELP PREVENT TIPPING OVER. DO NOT STAND OR SIT ON THE UNIT. DO NOT LEAN ON THE PRODUCT. DO NOT DRAG THE PRODUCT. USE ONLY ON A FLAT SURFACE. DO NOT USE UNTIL ALL SCREWS, BOLTS AND KNOBS ARE FIRMLY SECURED. THIS PRODUCT CONTAINS SMALL PARTS AND SHARP POINTS, KEEP AWAY FROM CHILDREN AND BABIES. ADULT ASSEMBLY REQUIRED. FAILURE TO FOLLOW THESE WARNINGS COULD RESULT IN SERIOUS INJURY.

MAXIMUM SAFE LOAD: 10KG FOR TOP PANEL, 7KG FOR EACH CLOTH BAG.

Hardware list

	a	6X35mm	20PCS
	b	15X10mm	20PCS
	c	6X30mm	14PCS
	d	4X35mm	14PCS
	e		2PCS
	f	3X12mm	26PCS
	g		4PCS
	h		2PCS
	i		2PCS

	j		2PCS
	k	4X15mm	2PCS
	l	3X12mm	4PCS
	m	4X12mm	2PCS
	n		2PCS
	o		2PCS
	r	5X30mm	1PC
	s		4PCS
	t	3X14mm	4PCS
	Philips Head Screw Driver (Not Provided) Tool required		

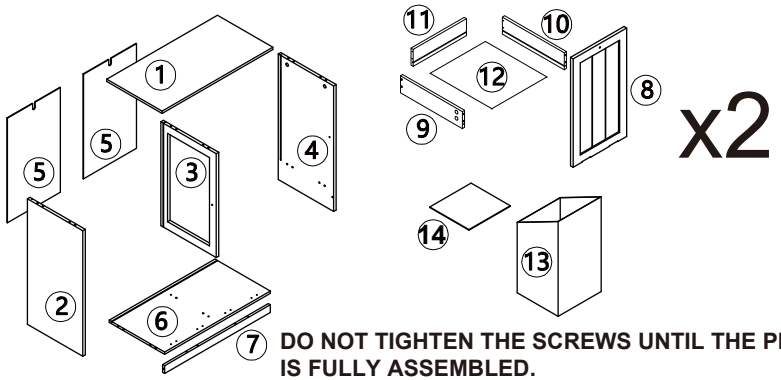

DO NOT TIGHTEN THE SCREWS UNTIL THE PRODUCT IS FULLY ASSEMBLED.

①	1 PC	②	1 PC	③	1 PC
④	1 PC	⑤	2 PCS	⑥	1 PC
⑦	1 PC	⑧	2 PCS	⑨	2 PCS
⑩	2 PCS	⑪	2 PCS	⑫	2 PCS
⑬	2 PCS	⑭	2 PCS		

STEP 1

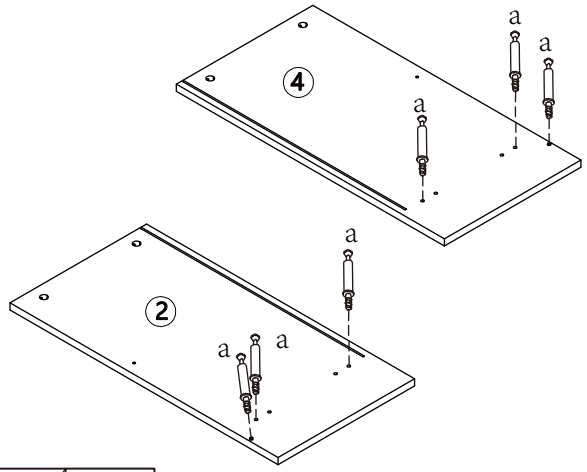

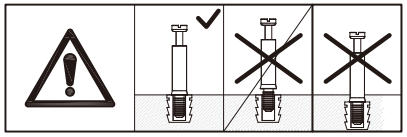

a X 6

STEP 2

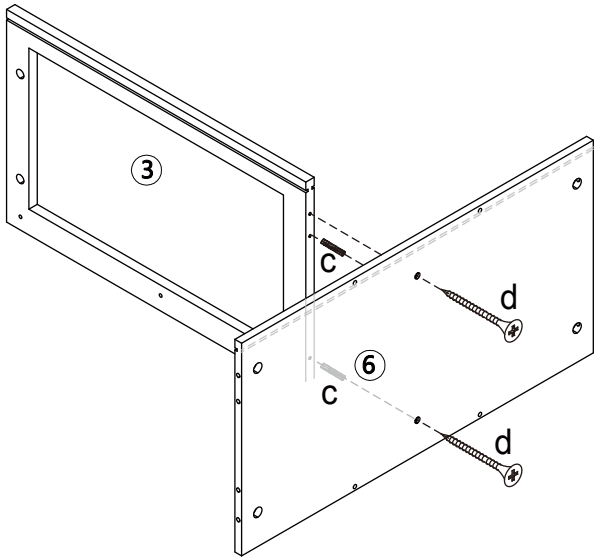

c X 2 d X 2

STEP 3

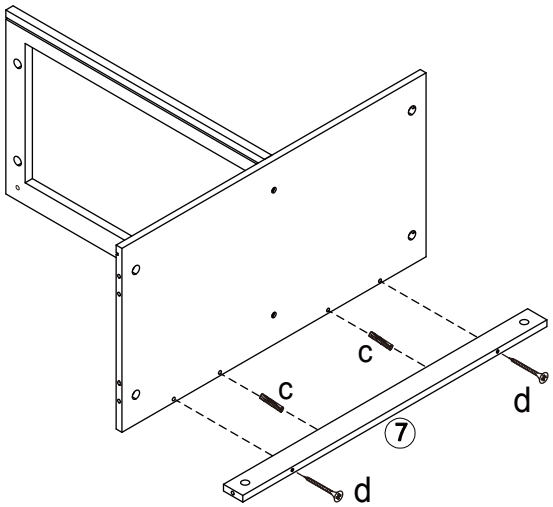

c X 2 d X 2

STEP 4

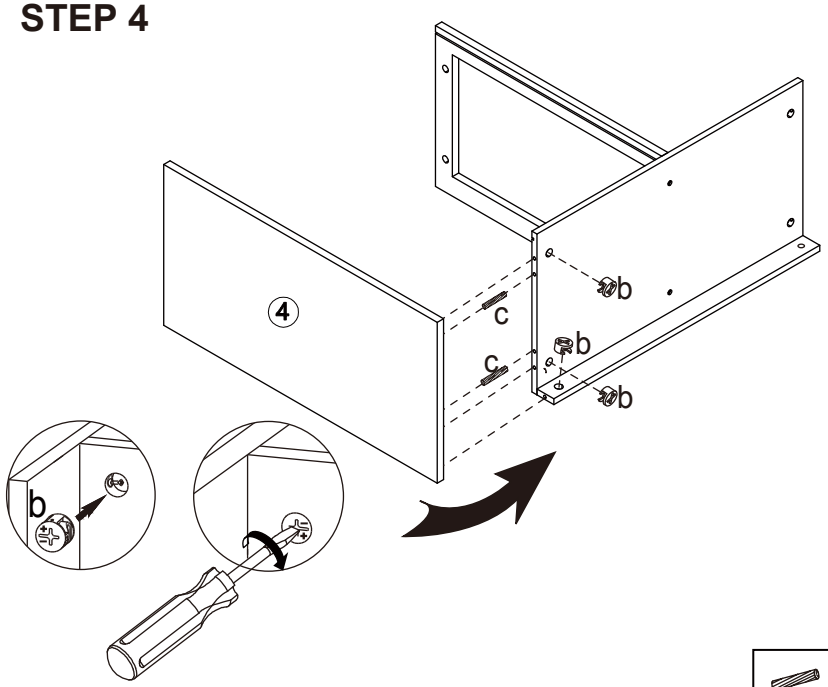

c X 2 b X 3

STEP 5

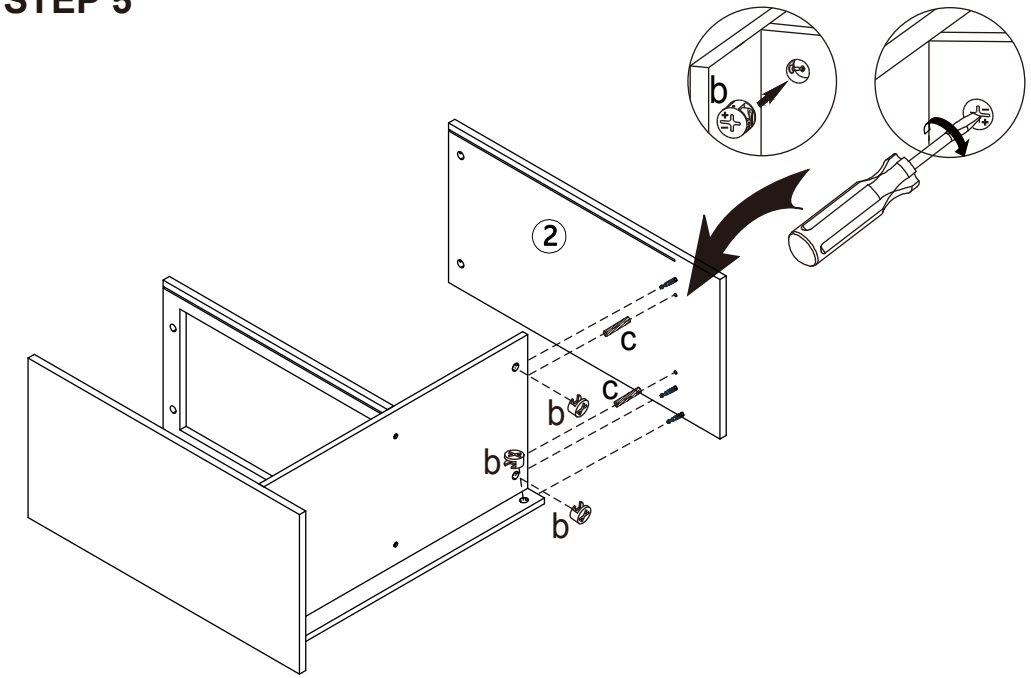

c X 2 b X 3

STEP 6

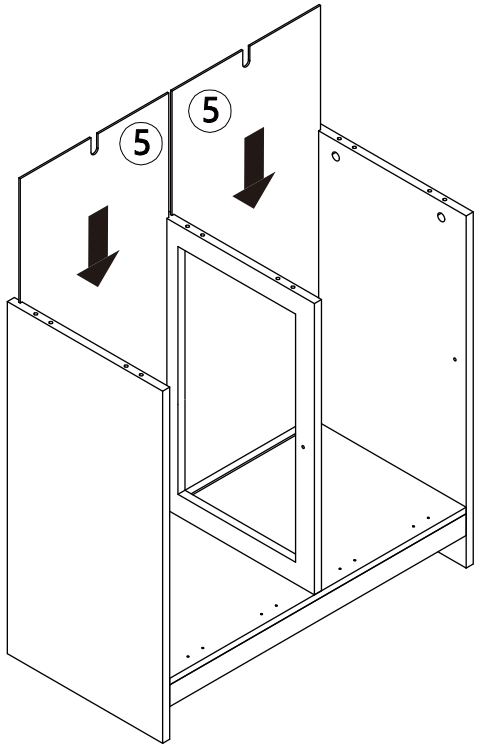

STEP 7

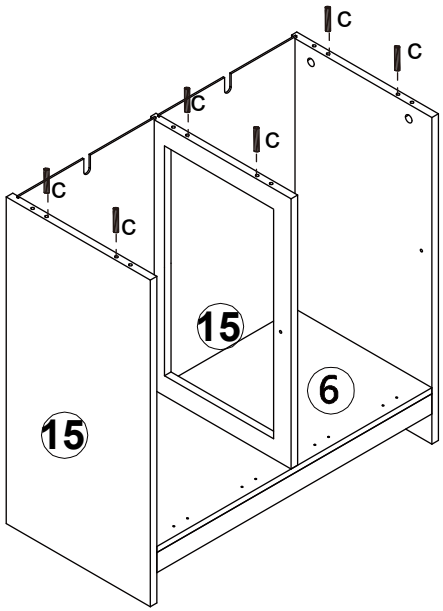

c X 6

STEP 8

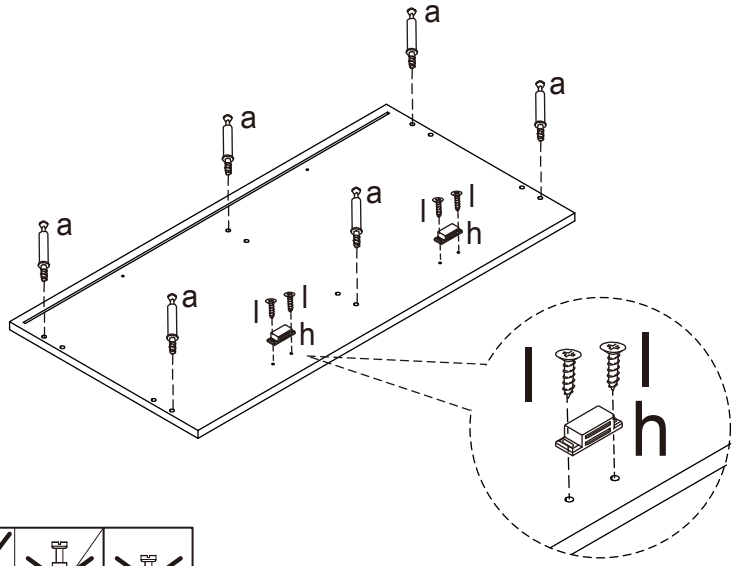

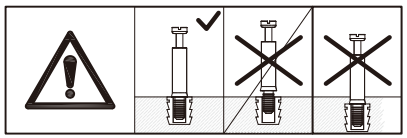

a X 6 h X 2 l X 4

STEP 9

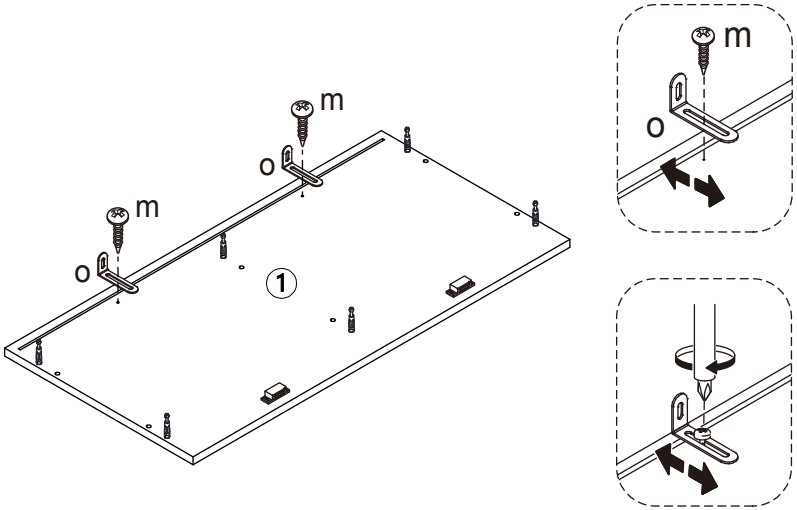

m X 2 o X 2

STEP 10

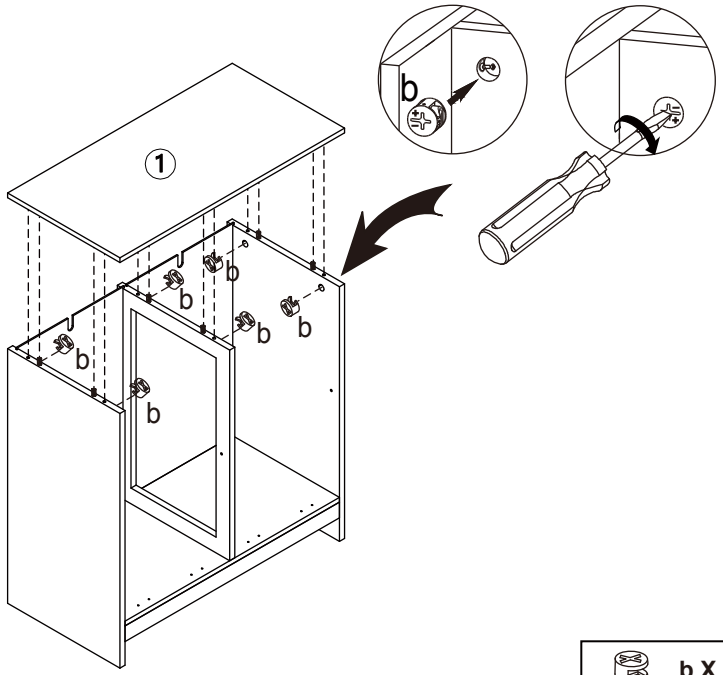

b X 6

STEP 11

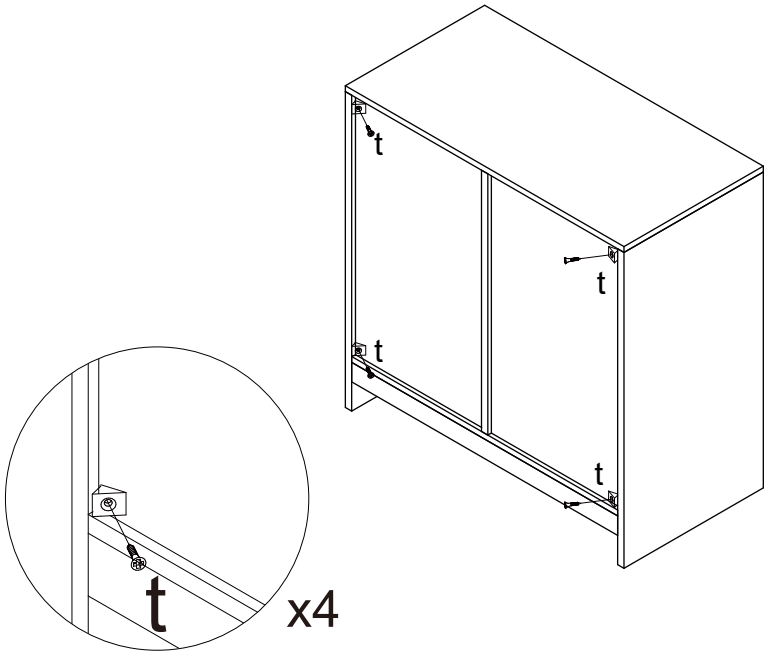

tx4

STEP 12

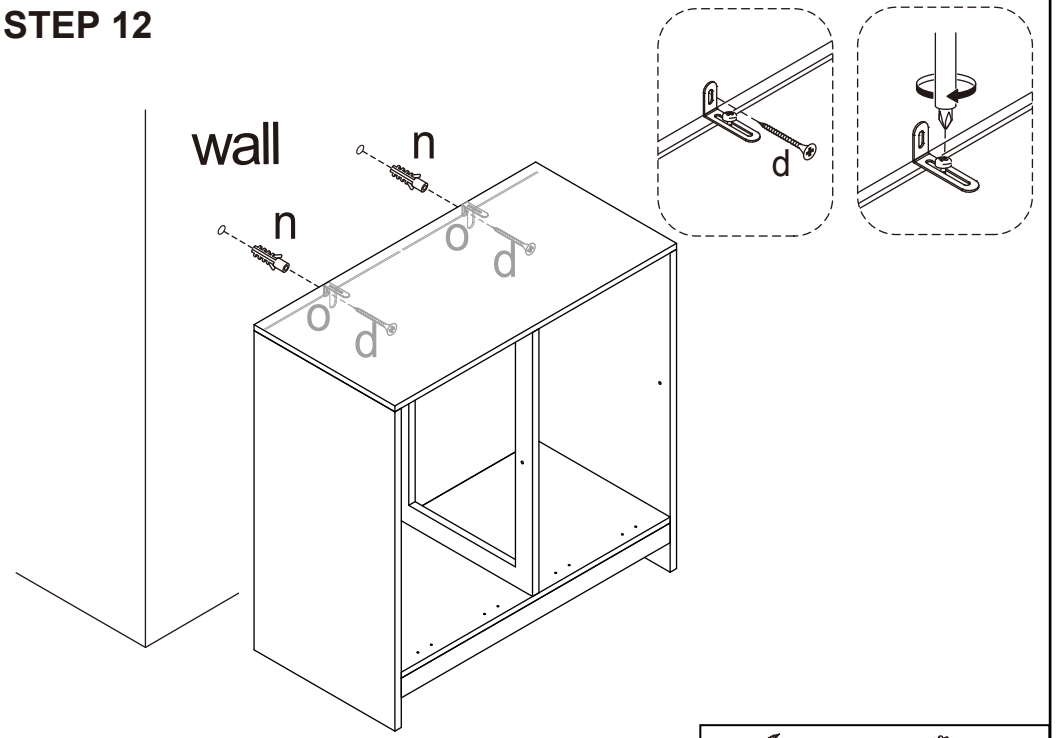

d X 2 n X 2

STEP 13

x2

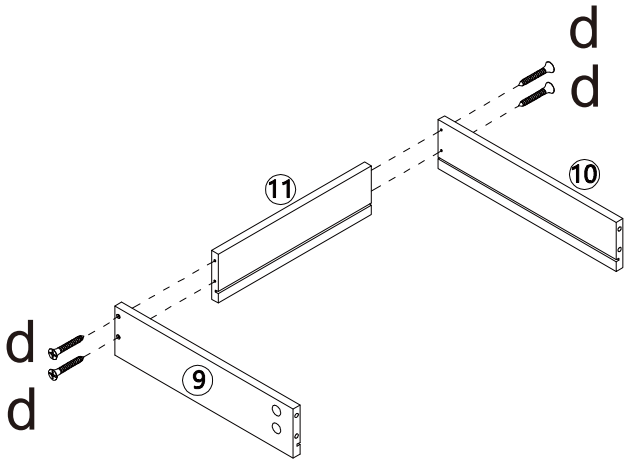

d X 8

STEP 14

x2

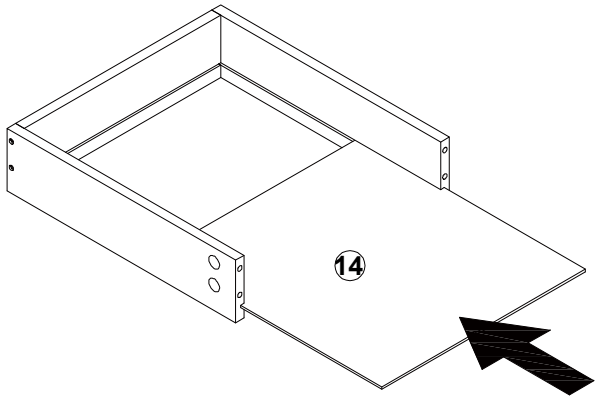

STEP 15

x2

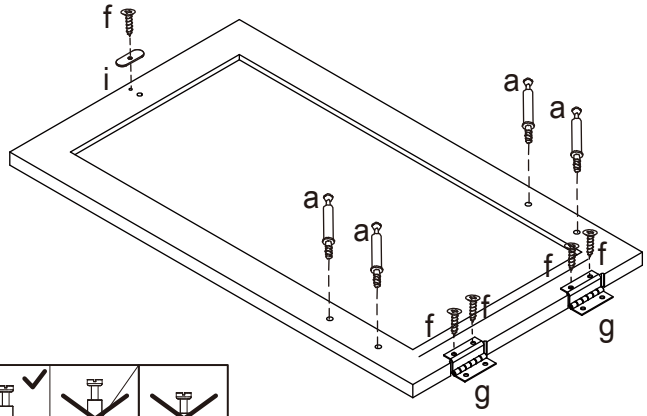

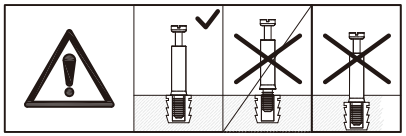

a X 8 f X 10 g X 4 i X 2

STEP 16

x2

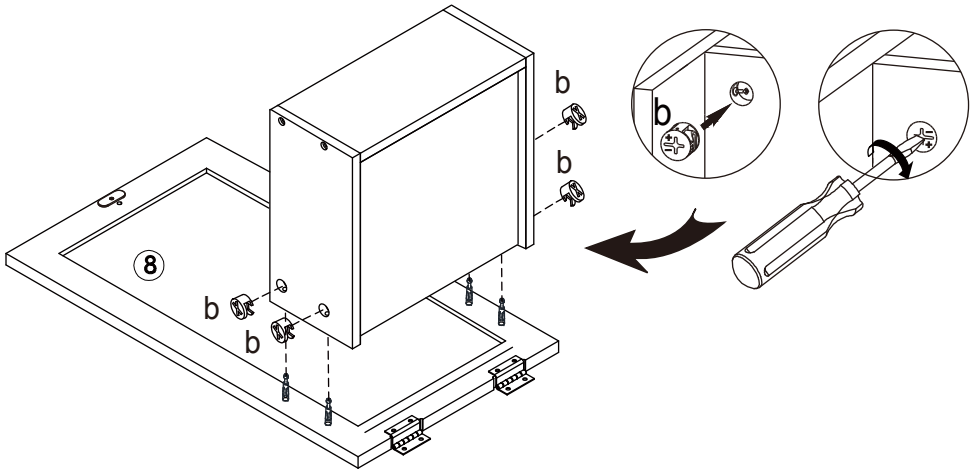

b X 8

STEP 17

x2

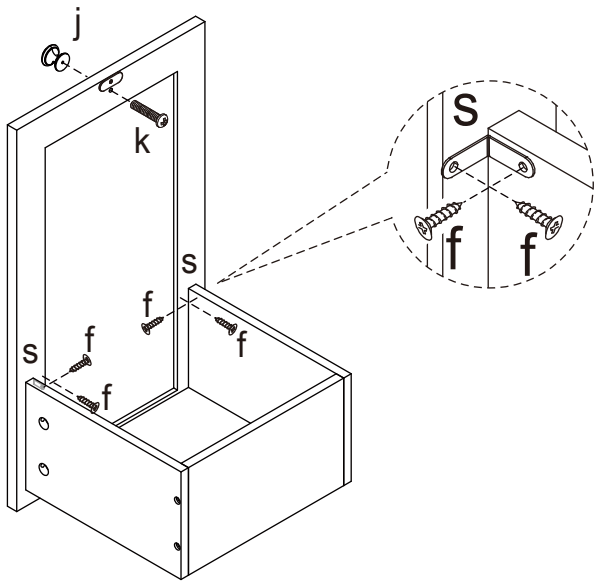

f X 8 j X 2 k X 2 s X 4

STEP 18

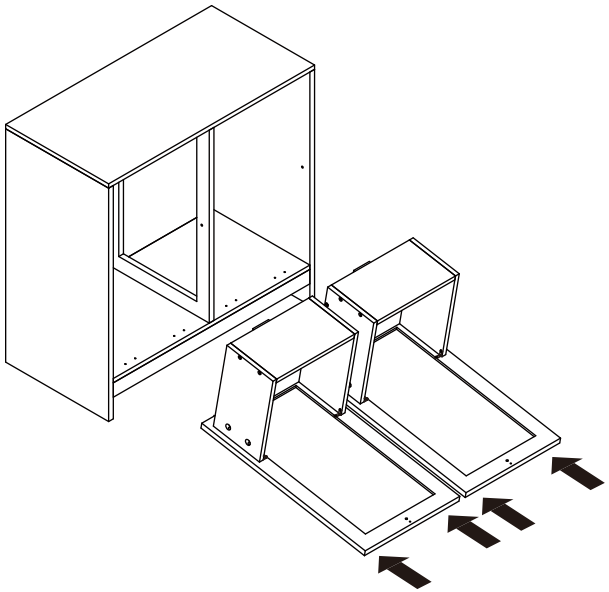

STEP 19

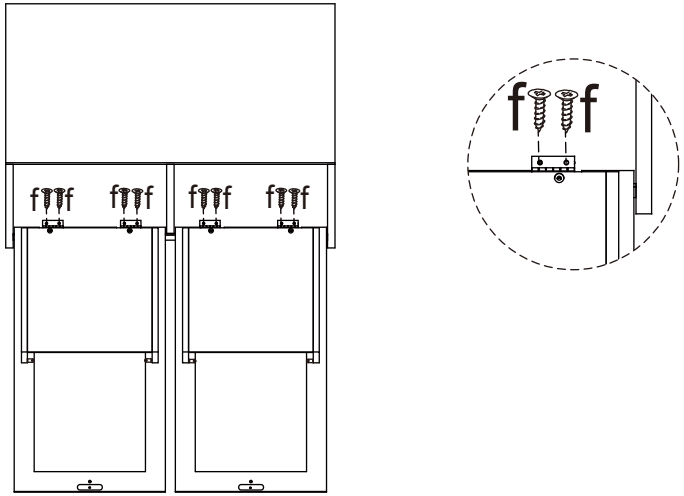

f X 8

STEP 20

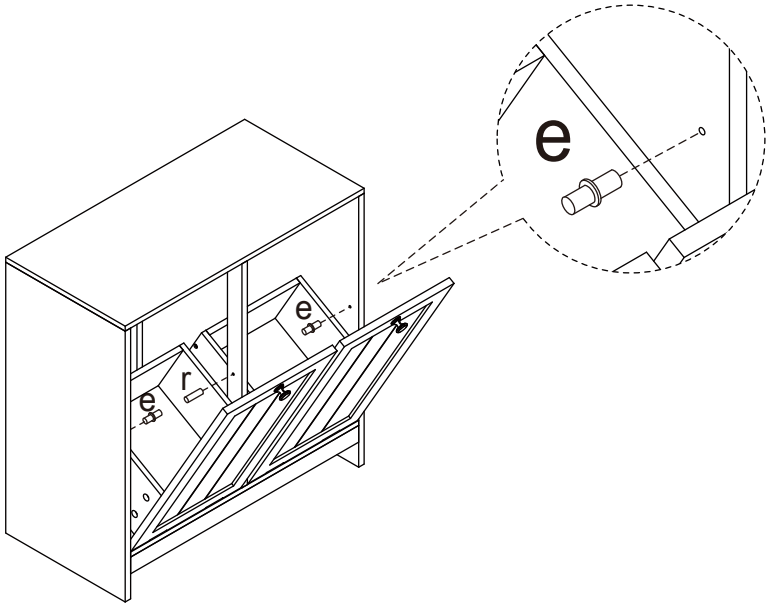

r X 1 e X 2

STEP 21

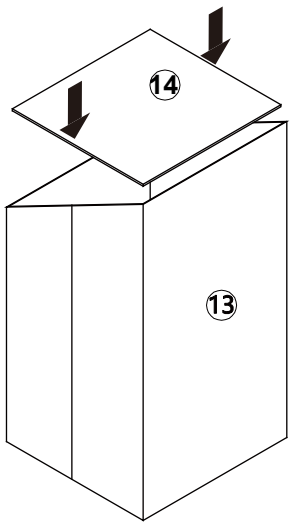

⚠ WARNING

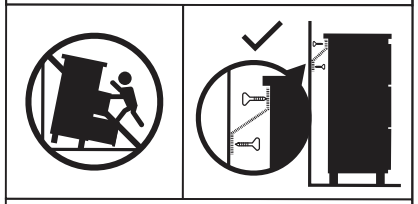

Children have died from furniture tipover.

- ALWAYS secure it with an anchor device.
- NEVER allow children to stand, climb or hang on drawers, doors, or shelves.
- NEVER open more than one drawer at a time.
- Place heavy items down low.
- Furniture type is at risk of toppling over.

NEVER put a TV on this furniture

This is a permanent label. Do not remove!

STEP 22

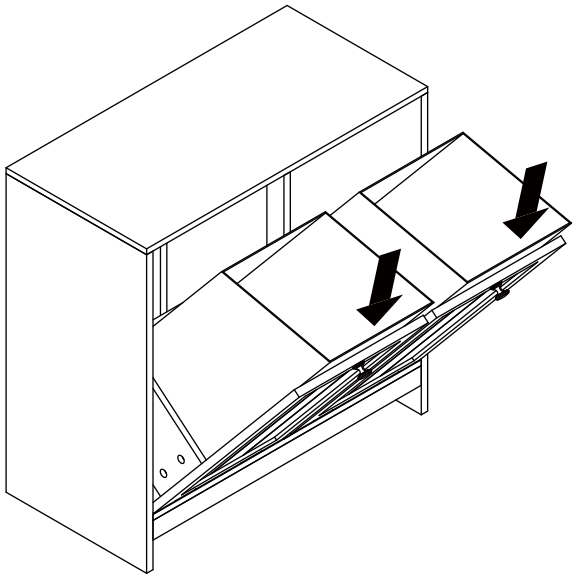

STEP 23

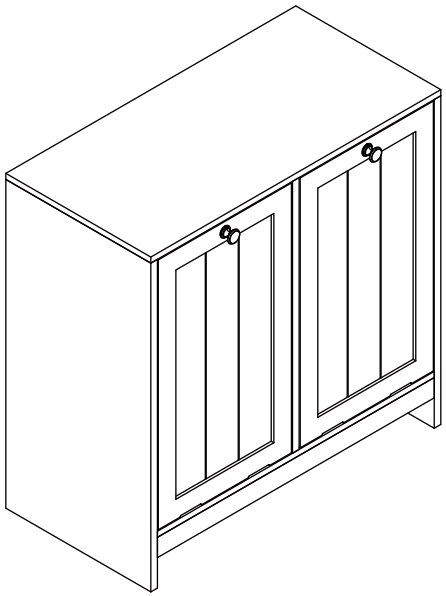

TOPPLING FURNITURE WARNING:

- **It is strongly recommended that this product is permanently fixed to the wall.**
- **Please seek professional advice if you are in doubt of what fixing device to use.**
- **Regularly check that anchors are securely maintained.**
- **Use safety drawer locks to prevent children climbing.**
- **Stability of tall items may be affected by thick pile carpet or uneven floors .**
- **Do not place unanchored televisions on furniture .**

CAUTION: for your safety when attaching the anchor fixings, please note the following:

- **Check any electrical wires or plumbing inside the wall before drilling any holes (if you are unsure please seek professional advice from a qualified tradesperson).**

WARNING: PLEASE SECURE YOUR FURNITURE WITH THE SUPPLIED WALL FIXING.