USER MANUAL

VOLLEYBALL SET

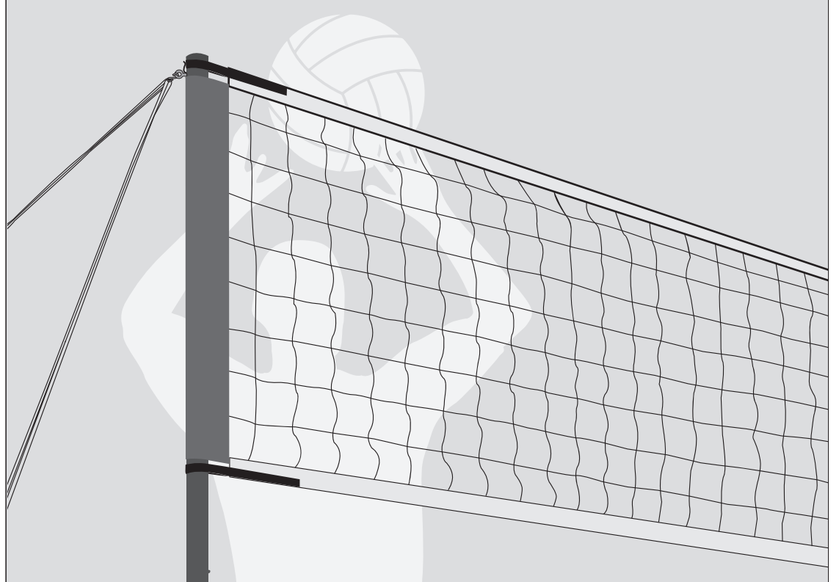

WARNING!

Adult assembly required.
CHOKING HAZARD - This item contains small parts.
Not suitable for children under 3 years.

If you have any questions regarding our products, please get in touch with us at. ***Email: customer_service@patiassy.com***

ACCESSORIES

A Top Pole x 2

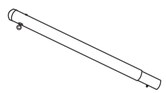

B1 Mid Pole x 2

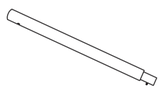

B2 Mid Pole x 2

C Bottom Pole x 2
+Stake x 2

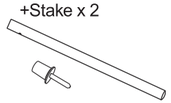

D Net x 1

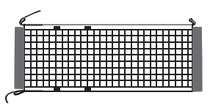

E Guide Rope x 2

F Boundary Line x 1

G Flip Scoreboard x 1

H Manual Pump x 1

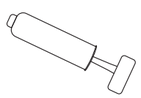

I Volleyball x 1

ASSEMBLY INSTRUCTION

Step 1 Spread out the Boundary Line (F) and straighten it, then fix the corner anchors to form a 30*60 ft field as shown in the picture.(**Note:** Find a clean, level place.)

F

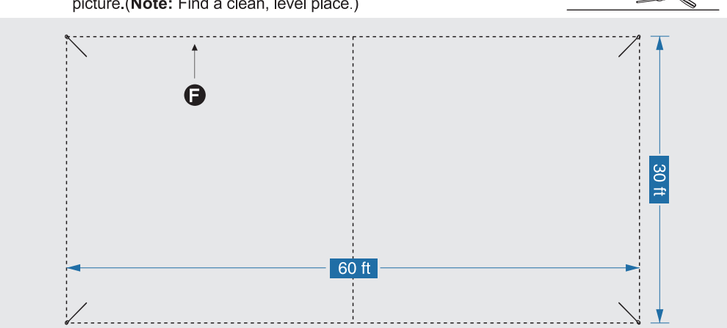

Step 2 Pass the top poles (A) through the side sleeves of the net (D).

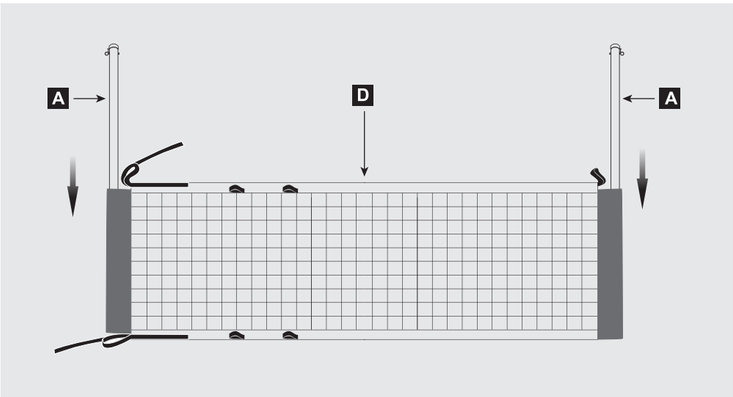

Step 3 Connect top poles, middle poles (B) and bottom poles (C), as shown below.

Tips: Lift up the side sleeves of the net for easy connection.

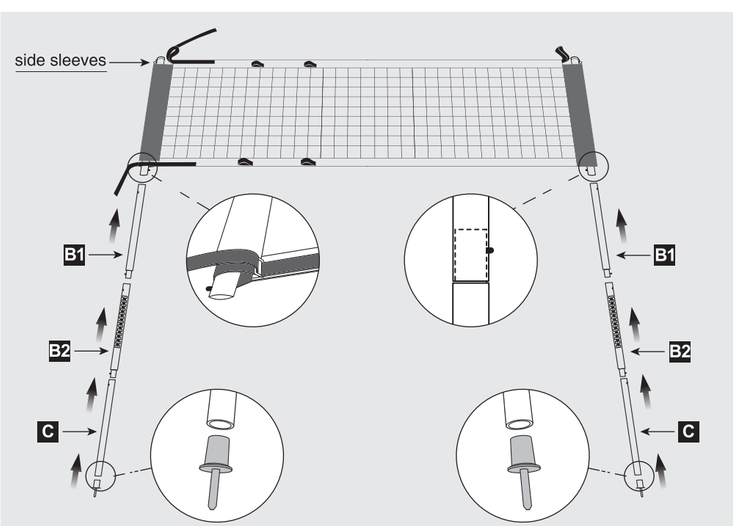

Step 4 Attach the s-hook on the guide rope (E) to the eyebolt of the top pole, and fix the steel stakes on the guide rope to the ground (The recommended distance between the two ground stakes is 5 feet. The distance between the pole and the center of the two ground stakes should be 4ft). Then, erect the steel poles and adjust the plastic handle to fix the poles.

To adjust the height of the net, move the eyebolt to the desired height setting.

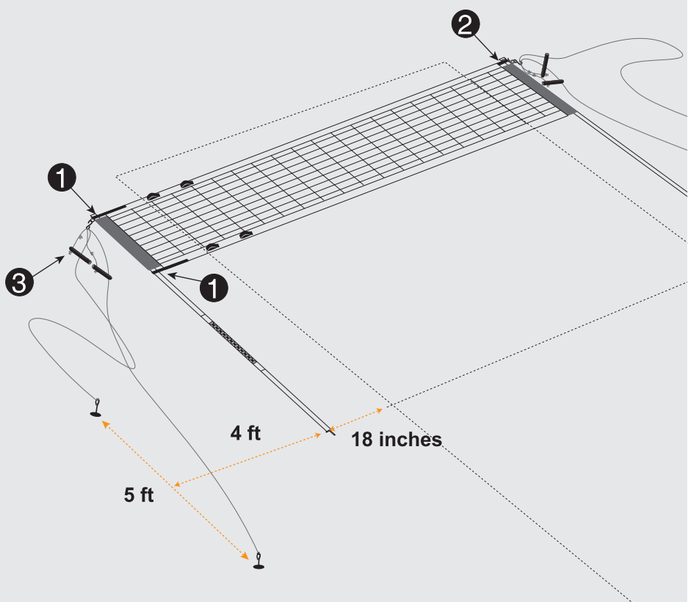

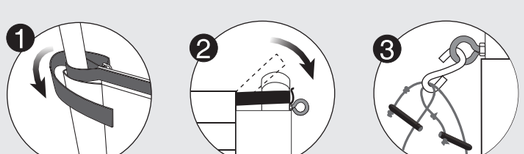

Pull the handle of the guyline to the top so for full length.

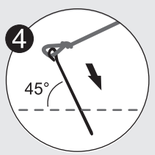

Nail the ground stake on the guide rope to the ground.

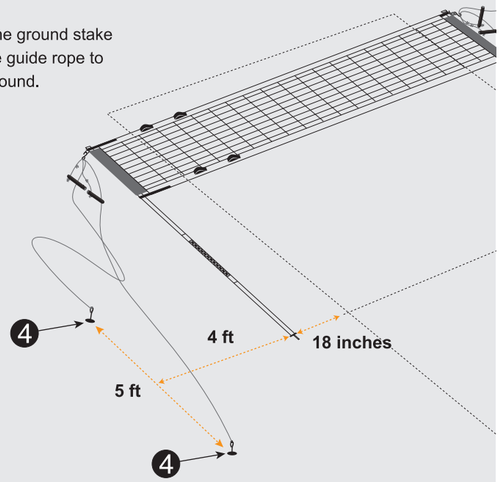

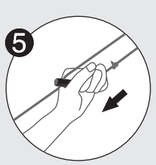

Tighten the guylines once more if the net is still droopy.

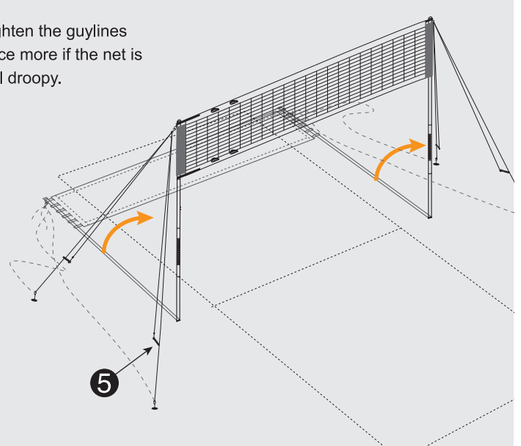

WIDTH ADJUSTMENT

Step 1 Select different net widths (32ft, 26ft, 20ft) by adjusting the pole position, Thread the pole to the corresponding pole loops. Ensure the upper and the lower loops are on the correct side of the bolt.

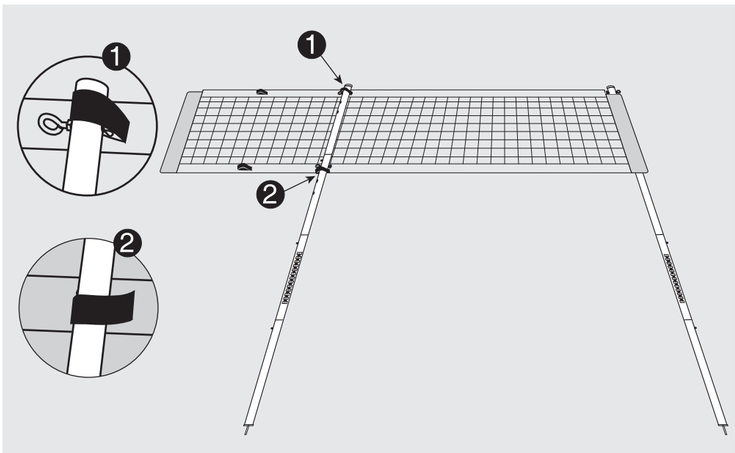
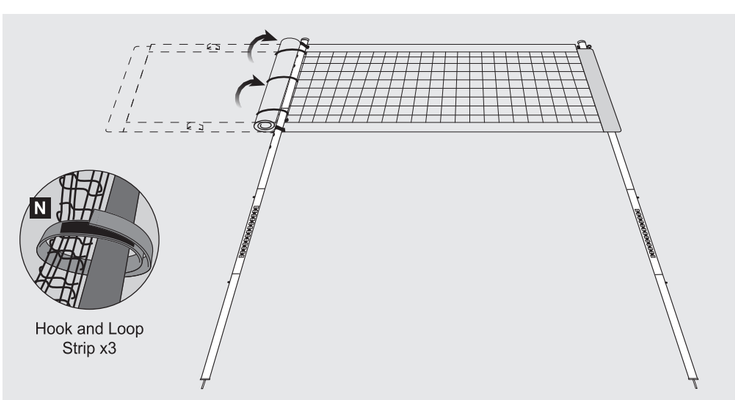
Step 2 When choosing 20ft or 26ft net widths, roll the excess netting towards the pole. Fasten the excess netting to the pole with the Hooks & Loops strip.