ST001S

Assembly Manual

Height-Adjustable Sofa console Table

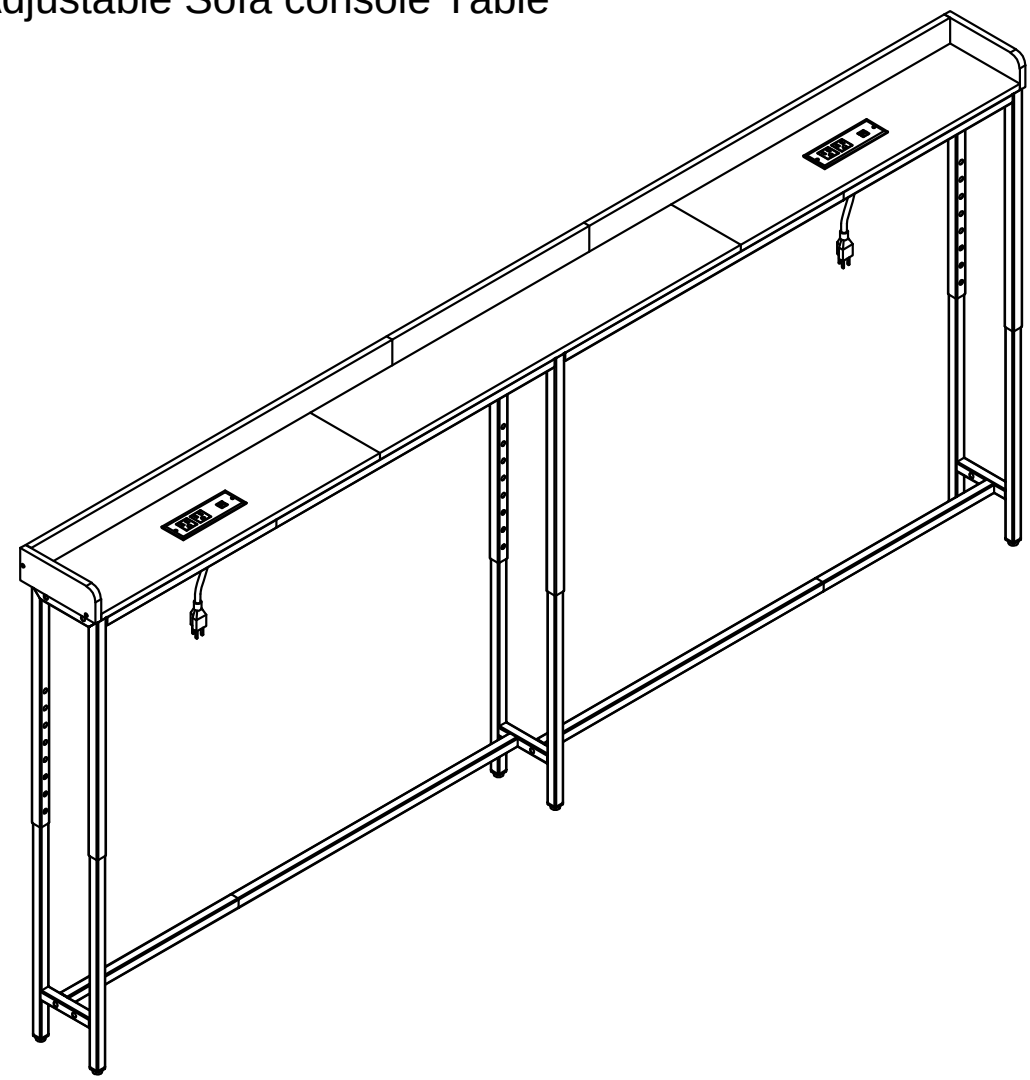

ASSEMBLY VIDEO

Scan for step-by-step assembly instructions.

Watch before you begin, or follow along as you build.

winarow.com/pages/st001s

Need help? Contact us before returning.

Missing parts, damage or assembly questions? Email us: **support@winarow.com**

Contact us at **1-888-986-0011** Monday-Friday | 10:00 a.m.-4:00 p.m. PST

Warranty & Damage Policy

1. Damage Upon Delivery — Replacement Policy

We understand that furniture can be damaged during shipping. If your item arrives damaged, defective, or with missing parts, please contact us within 30 days of delivery.

What qualifies:

·Visible damage to the tabletop, frame, legs, or structure upon arrival.

·Broken, cracked, or crushed components.

·Missing hardware or parts.

·Electrical outlet not working upon arrival.

What does not qualify:

1. Damage caused after delivery, including scratches, dents, or stains from normal use.
2. Damage from improper assembly or misuse.
3. Normal wear and tear, including surface scratches or minor color variation.

What we will do:

If your claim is approved, we will, at our sole discretion:

✓ Send replacement parts or components at no cost to you; or

✓ Arrange a replacement for the damaged item or component; or

✓ Issue a partial or full refund in certain cases.

We may ask for photos or videos of the damage and the packaging before approving a claim.

How to report:

Contact us: **support@winarow.com**

①Your order number.

②Photos of the damaged item and packaging.

③A brief description of the issue.

We'll respond within 24 hours on business days.

Prefer the phone? Give us a ring at 1-888-986-0011.

Customer Service is available Monday–Friday, 10:00 a.m. to 4:00 p.m. PST.

Please note: Our representatives may not be technical specialists, but they will assist you and connect you with the appropriate technical staff if needed.

Warranty & Damage Policy

2. Activate Your Warranty — Scan the QR Code

We recommend activating your warranty within 30 days of delivery.
Activation helps us process any future warranty or damage claims faster.

Warranty

To activate your warranty, please scan the QR code.

Once submitted, your warranty record will be created in our system, and you will receive a confirmation email.

Warranty registration is optional and does not affect your coverage under this warranty.

If you cannot scan the QR code, please contact us at support@winarow.com with your order information, and we will register your warranty manually.

3. Electrical Component Warranty — 1 Year

Winarow provides a 1-year limited warranty on the electrical power strip included with your furniture, covering defects in materials and workmanship under normal residential use.

This warranty begins on the date of delivery, applies only to the original purchaser, and is non-transferable.

What is covered:

1. The power strip does not function properly under normal use.
2. Defects in wiring, internal connections, or electrical components that are not caused by misuse.
3. Failure of the outlet to provide power when properly connected and used as intended.

What is not covered:

1. Damage caused by improper installation, incorrect voltage, power surges, or use with incompatible devices.
2. Damage caused by liquid spills, moisture, or physical impact.
3. Normal wear and tear, cosmetic damage, or discoloration.
4. Products used for commercial, rental, or institutional purposes.
5. Outlets that have been modified, repaired, or disassembled by anyone other than us.

About the Safety Label

We know the look of your home matters to you. The safety label on this table serves as an important reminder for everyone who uses it, including family, guests, and future owners.

This table is designed to hold everyday items. It is not designed for anyone to sit, stand, climb, or hang on. If you place it behind a sofa, take extra care to prevent children from using the sofa to climb onto the table.

Please keep the safety label in place and easy to read. Thank you for helping keep your home safe.

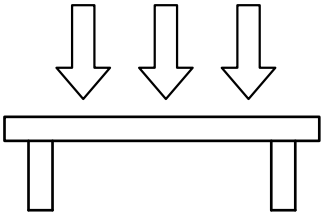

TABLETOP MAX LOAD
50 lb (22.7 kg)
Evenly distributed

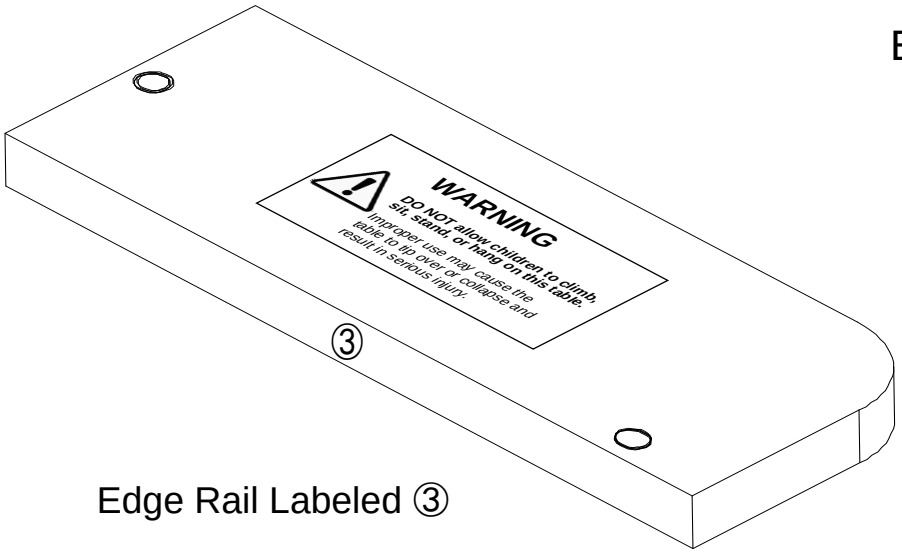

Edge Rail Labeled ③

Parts & Hardware

Wood Parts

Edge Rail

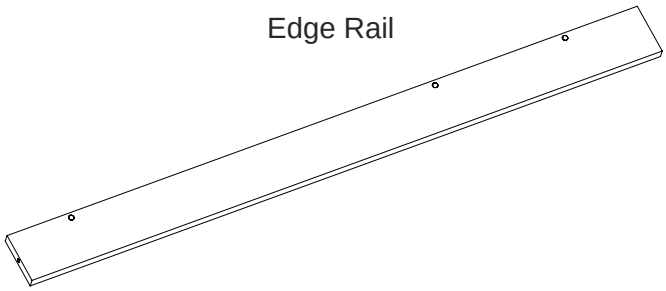

① x2

Edge Rail

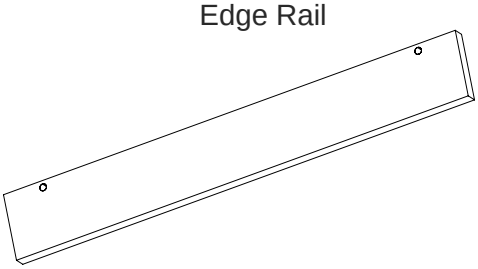

② x1

Edge Rail

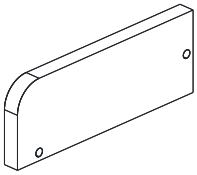

③ x2

Tabletop panel

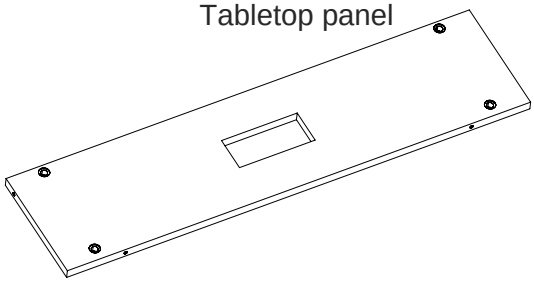

④ x2

Tabletop panel

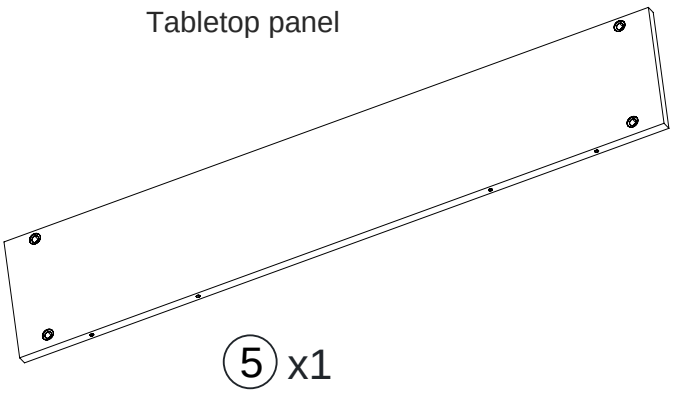

⑤ x1

Parts & Hardware

Metal Parts

Upper Leg

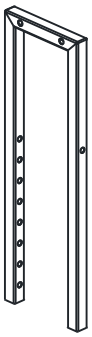

⑥ x3

Lower Leg

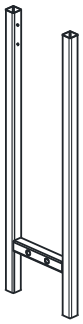

⑩ x3

Upper Support Bar

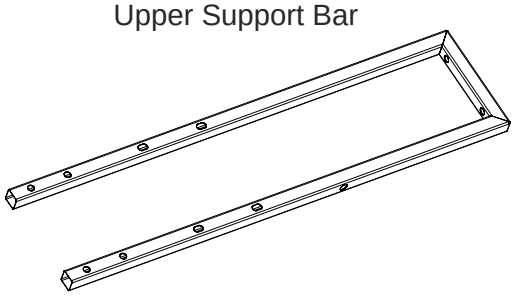

⑦ x2

Upper Support Bar

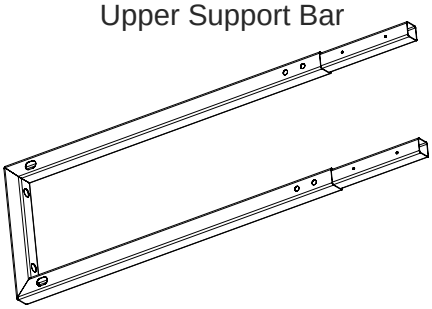

⑧ x2

Lower Support Bar

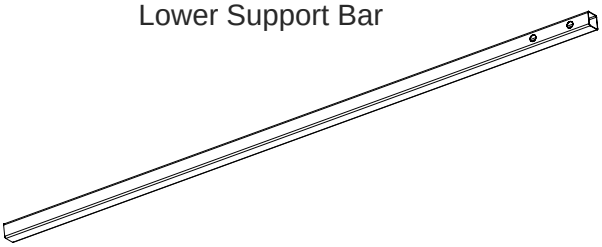

⑨ x2

Lower Support Bar

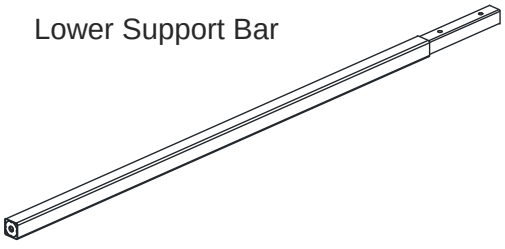

⑪ x2

Brace

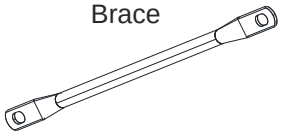

⑫ x2

Parts & Hardware

Fasteners

Sleeve nut

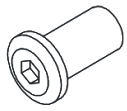

M6 x 15 mm

Ⓐ x6

Bolt



M6 x 10 mm

Ⓑ x27+1spare

Bolt

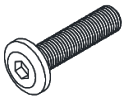

M6 x 25 mm

Ⓒ x12+1spare

Bolt

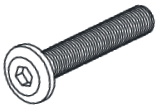

M6 x 35 mm

Ⓓ x8

Bolt

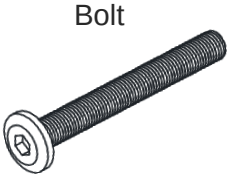

M6 x 50 mm

Ⓔ x2

Wood screw

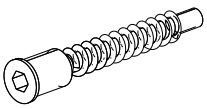

M5 x 38 mm

Ⓕ x12+1spare

Adjustable foot

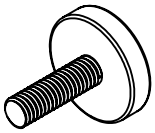

Ⓖ x6

Screw



ST3.5 x 12 mm

Ⓗ x4

Power Strip & Anti-tip Kits

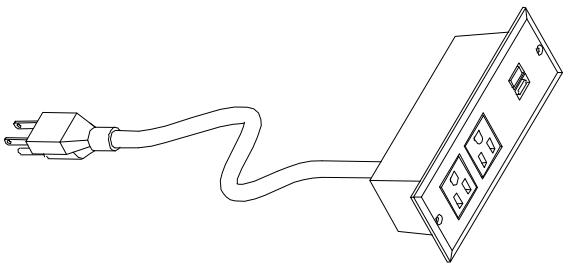

Ⓚ x2

Each set includes
one screw,
one wall anchor,
one strap.

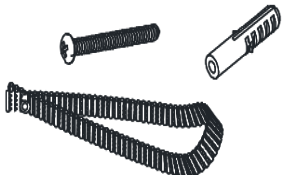

Ⓙ x2 SETS

Parts & Hardware

Assembly Tools

Allen Key

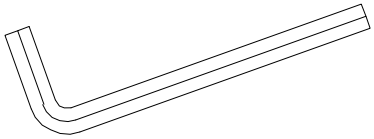

⬡3mm x1

Allen Key

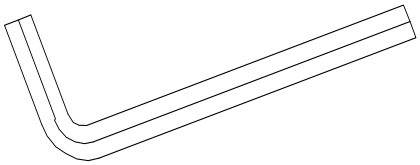

⬡4mm x2

Phillips Screwdriver

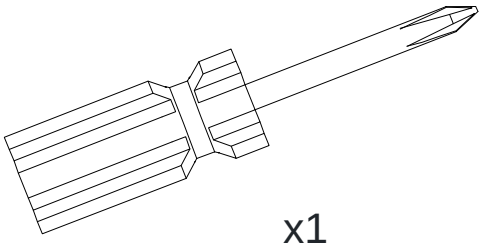

x1

Part Identification

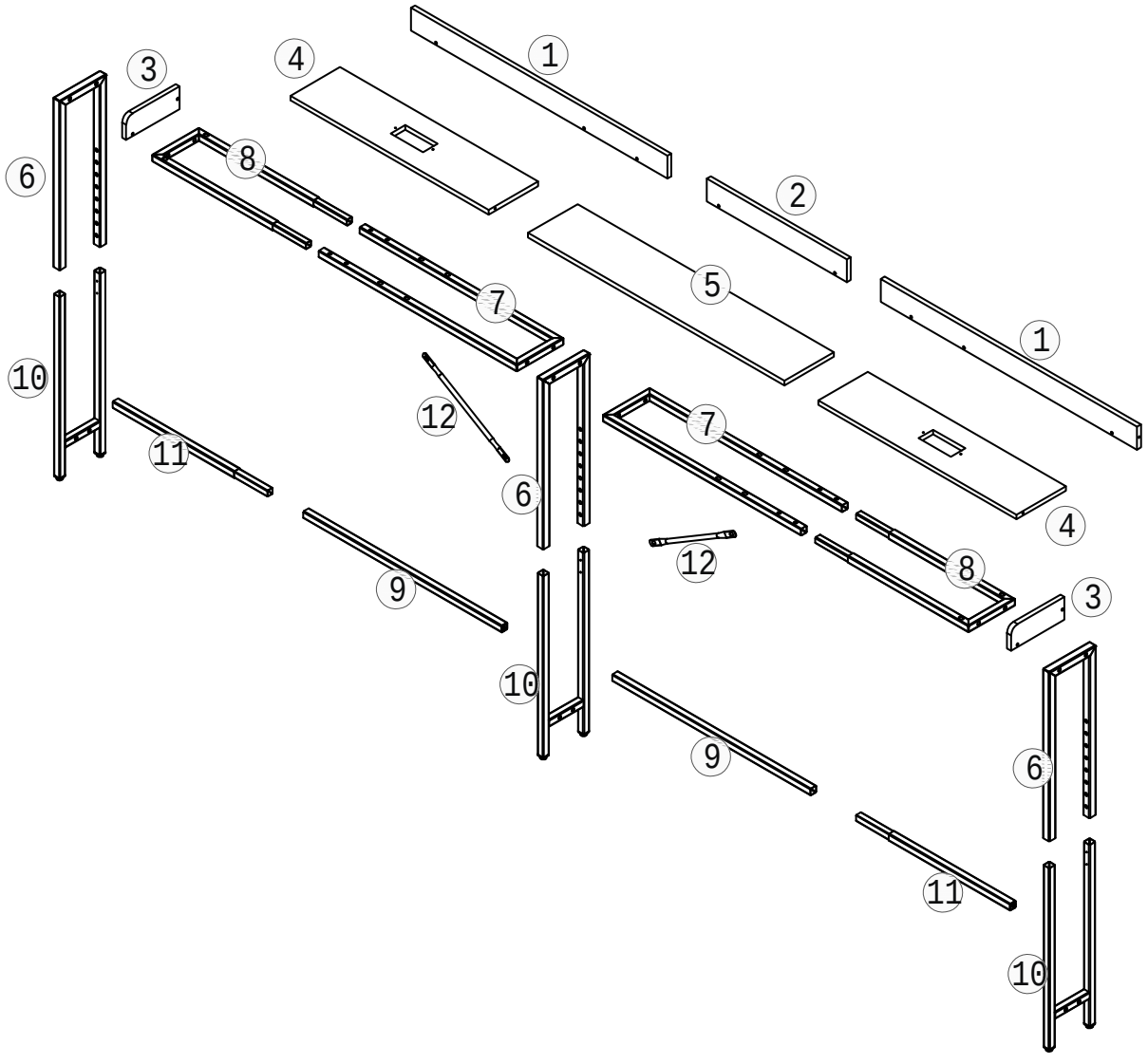

Step 1

Note:

Part ⑩ comes pre-installed inside part ⑥. The two sections of each leg assembly are not yet secured and can slide freely. Hold both sections in place while installing the feet to prevent scratches.

CAUTION:Keep fingers clear when sliding the leg sections.

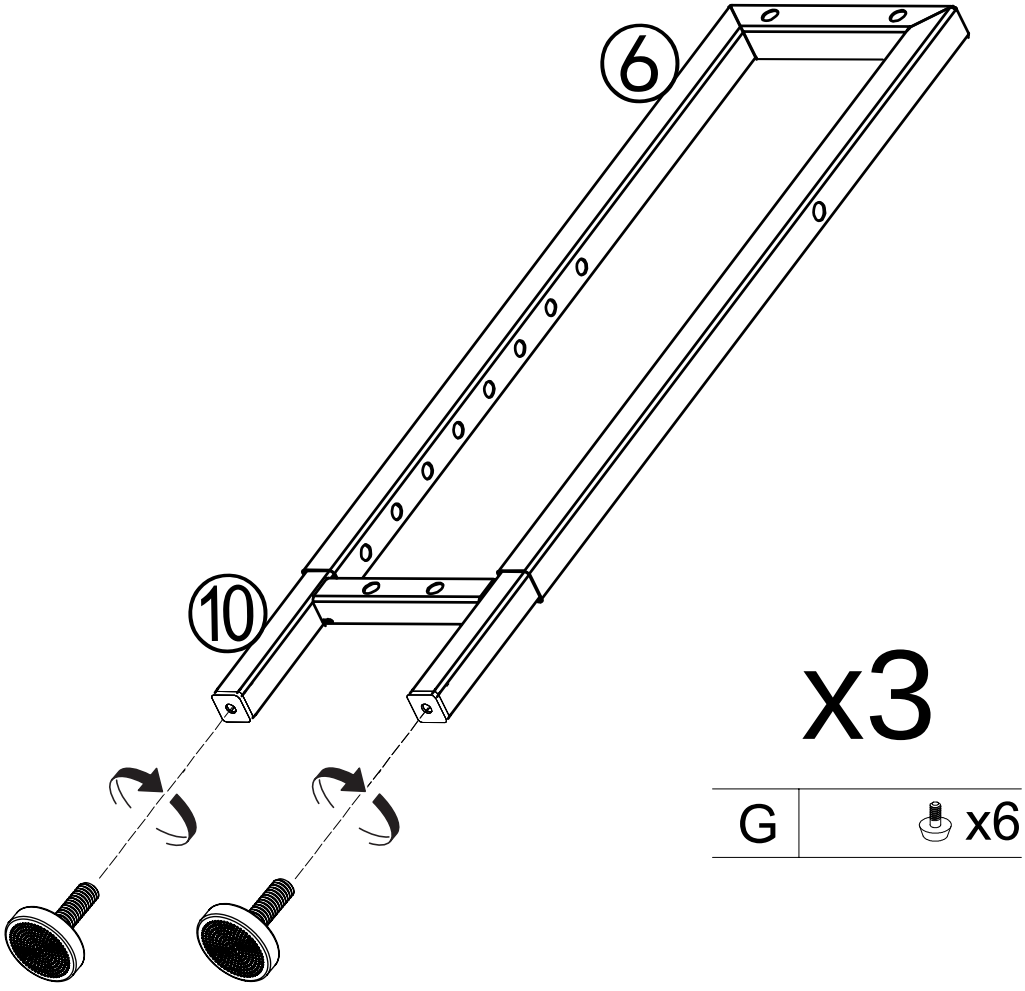

Install the plastic leveling feet (G) on the table legs as shown. Repeat for the remaining two leg assemblies.

Step 2

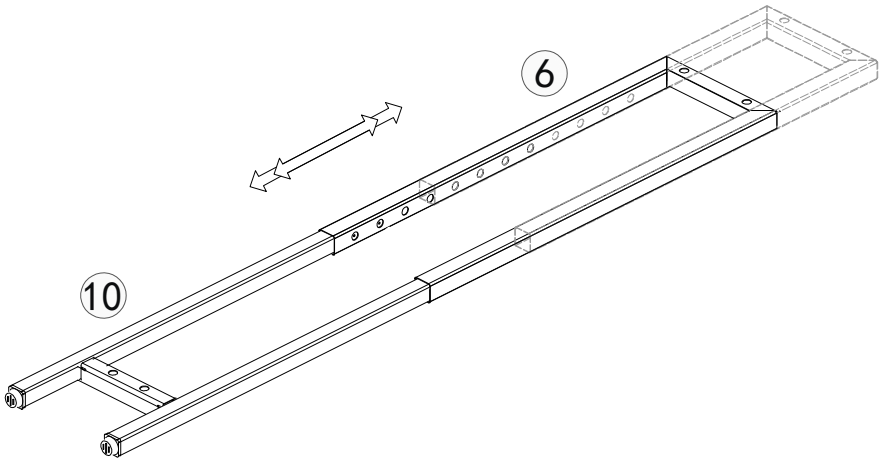

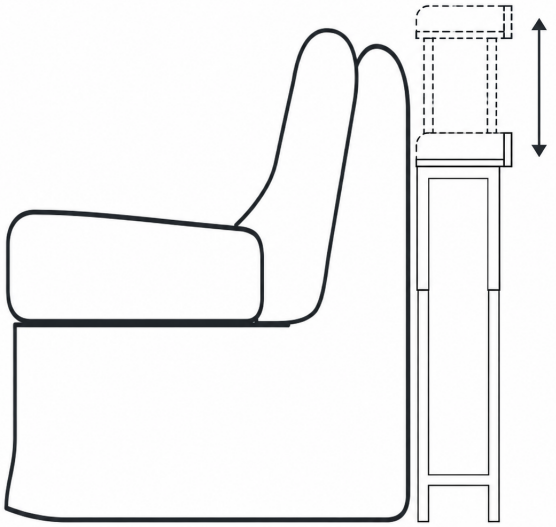

Slide the inner leg sections ⑩ in or out to set the desired table height for your sofa. Align the adjustment holes, then insert and tighten the screws to secure the legs.

Make sure all legs are set to the SAME height.

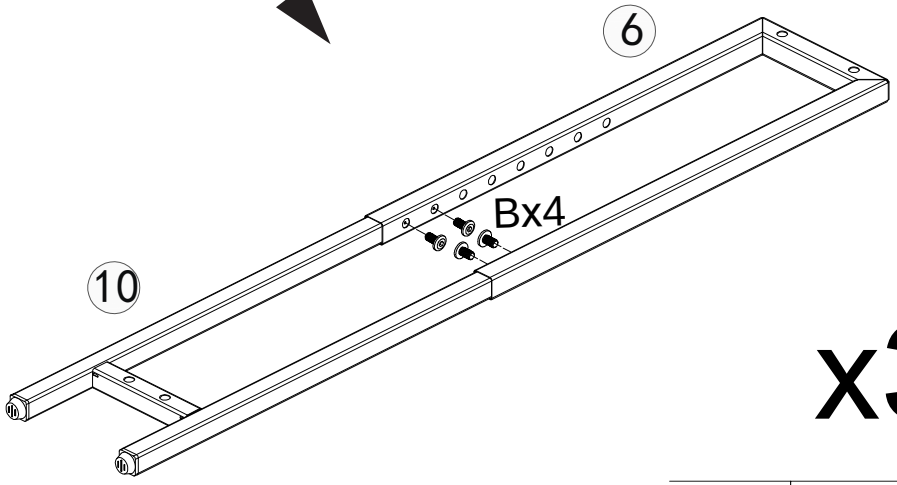

x3

B	M6x10 x12

Step 3

A	M6x15	x2
E	M6x50	x2

Note:
The **three circled** mounting holes must **face the same side** so the support braces ⑫ can be installed later.

Attach both frames ⑦ to the leg assembly ⑥/⑩ using hardware (A) and (E), as shown.

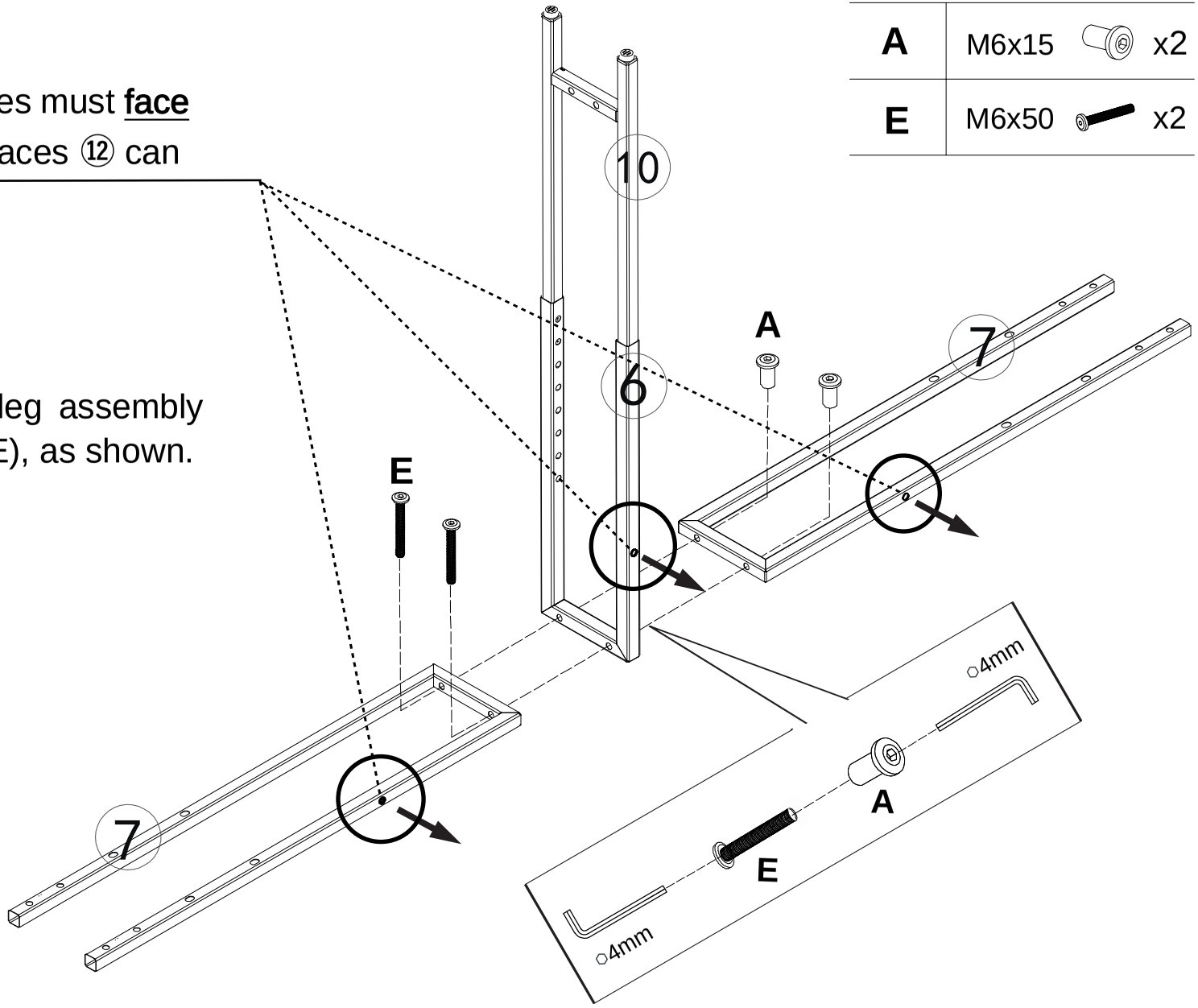

Step 4

Fully insert the sleeve at the top of part ⑧ into part ⑦.

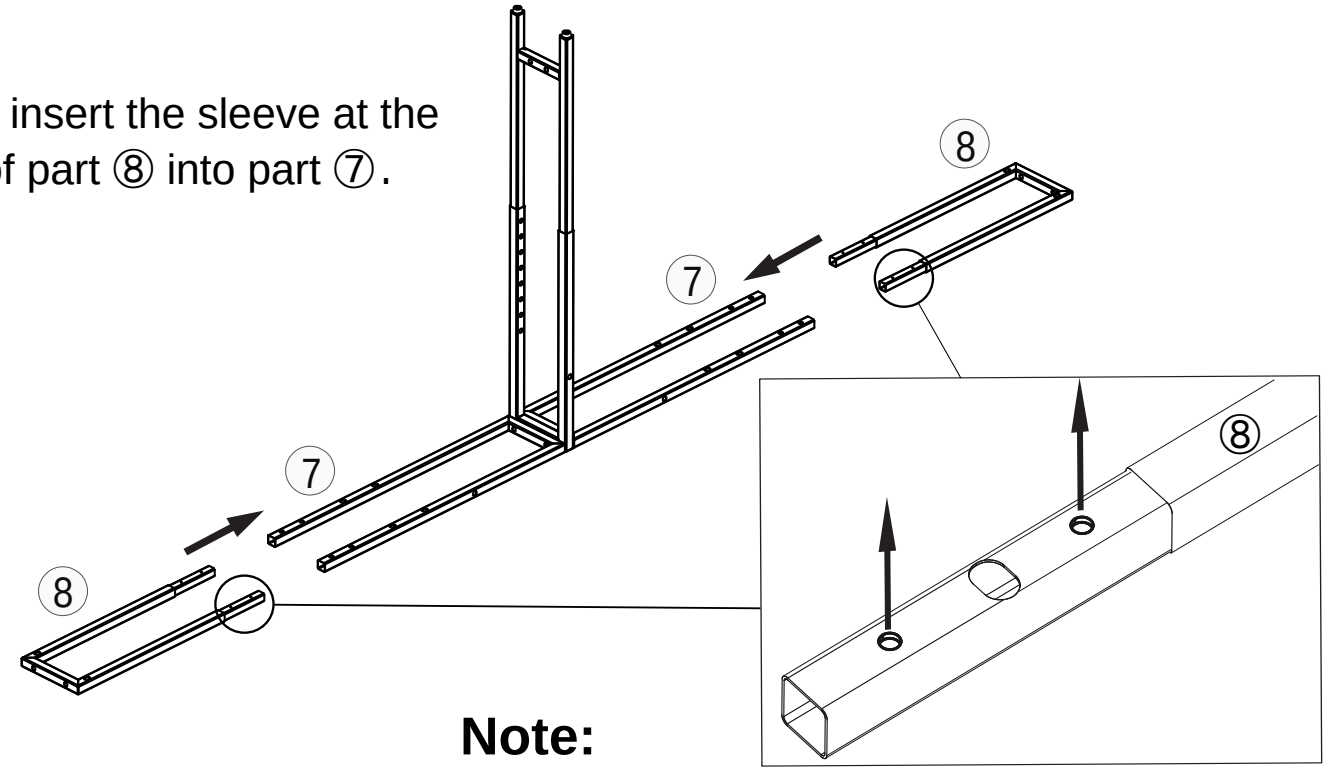

Note:

Make sure the screw pilot holes face up.

B	M6x10	x8

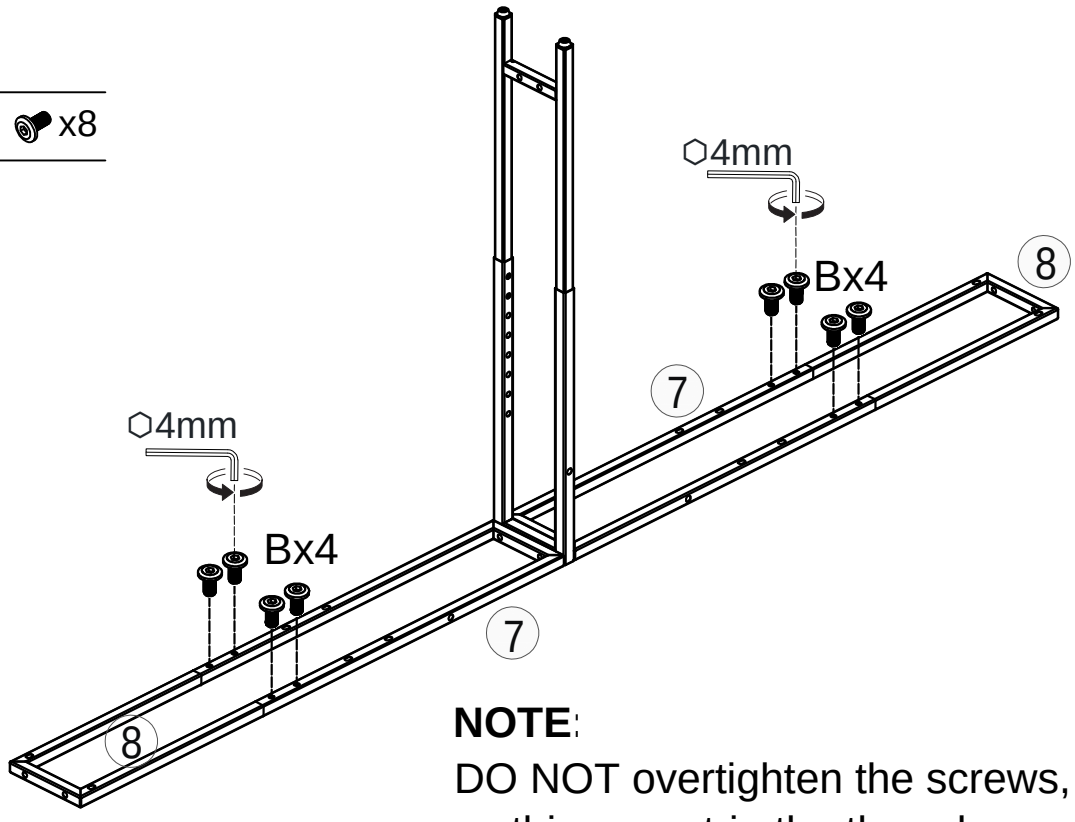

NOTE:

DO NOT overtighten the screws, as this may strip the threads.

Step 5

Place panels ④–⑤–④ face down in the order shown.

Make sure the holes for the edge rails along the long edges are all **on the same side**, and the holes on the short edges of panels ④ face outward.

Align the frame with the mounting holes and secure it using bolts (C).

DO NOT OVERTIGHTEN.

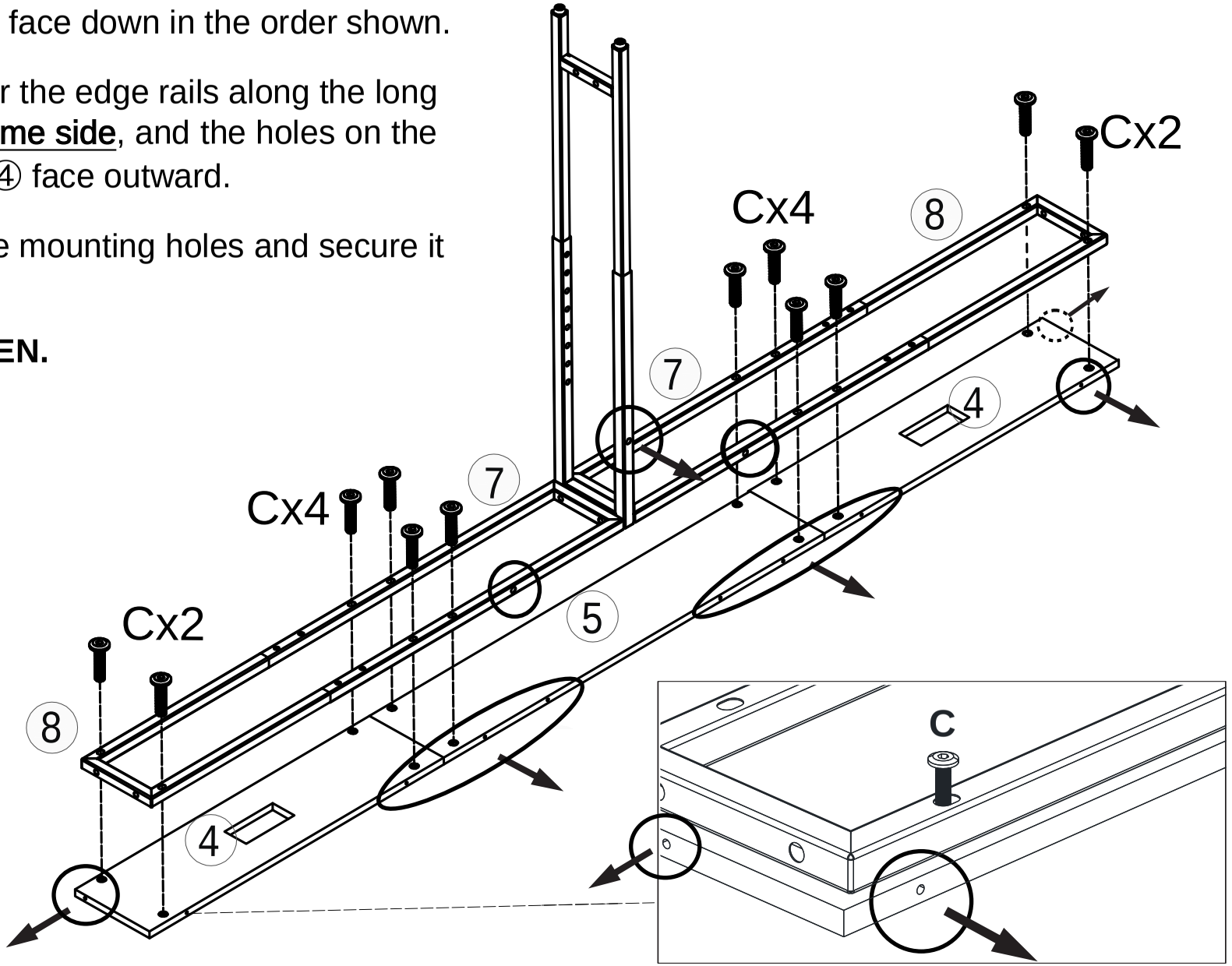

C	M6x25	x12

Step 6

Rotate the assembled section 90° and lay it flat on a level floor, with the holes along the long edges of the tabletop panels facing up.

⚠ **IMPORTANT**: Keep the tabletop in contact with the floor while rotating the assembly. **DO NOT LIFT** the assembled frame off the floor.

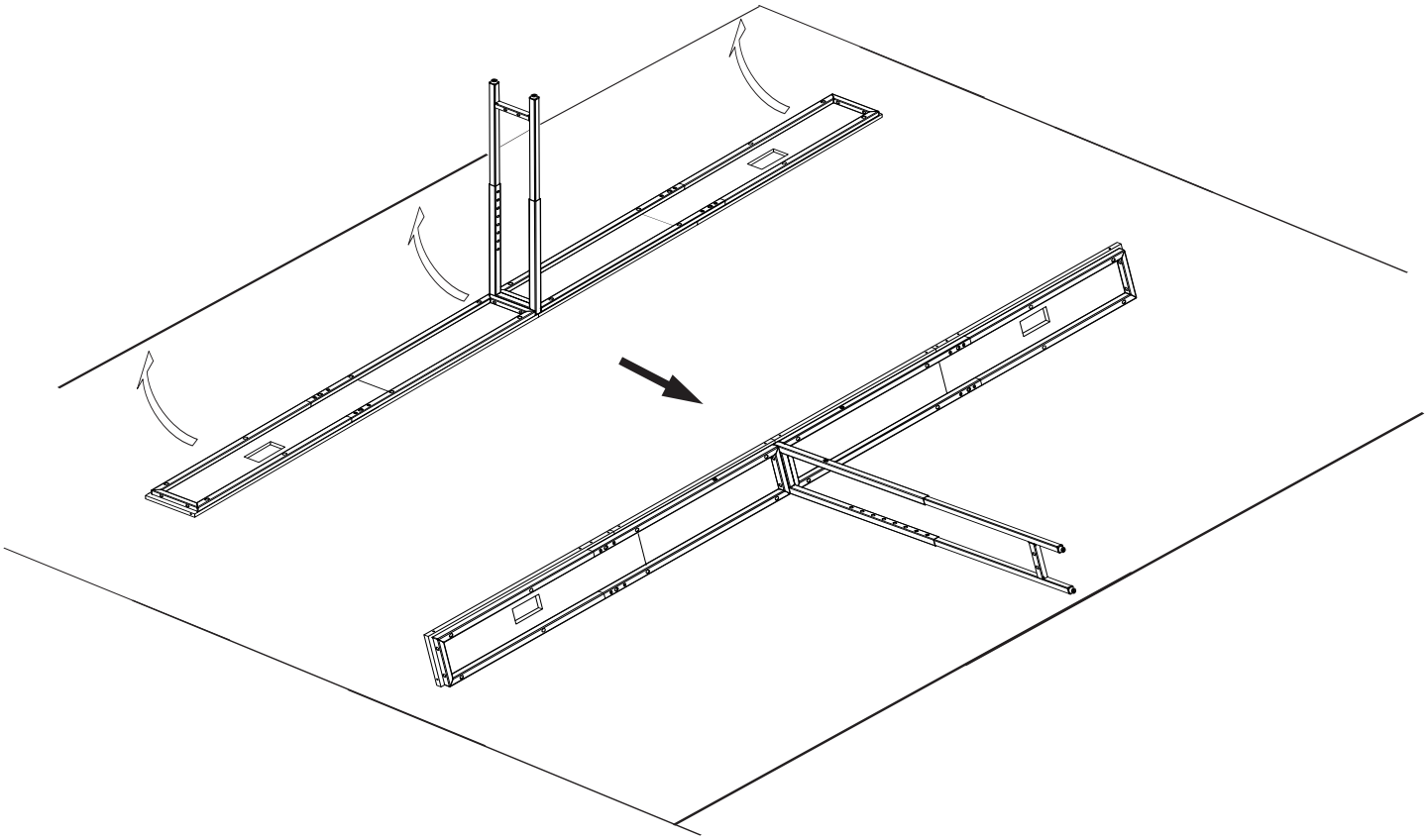

Step 7

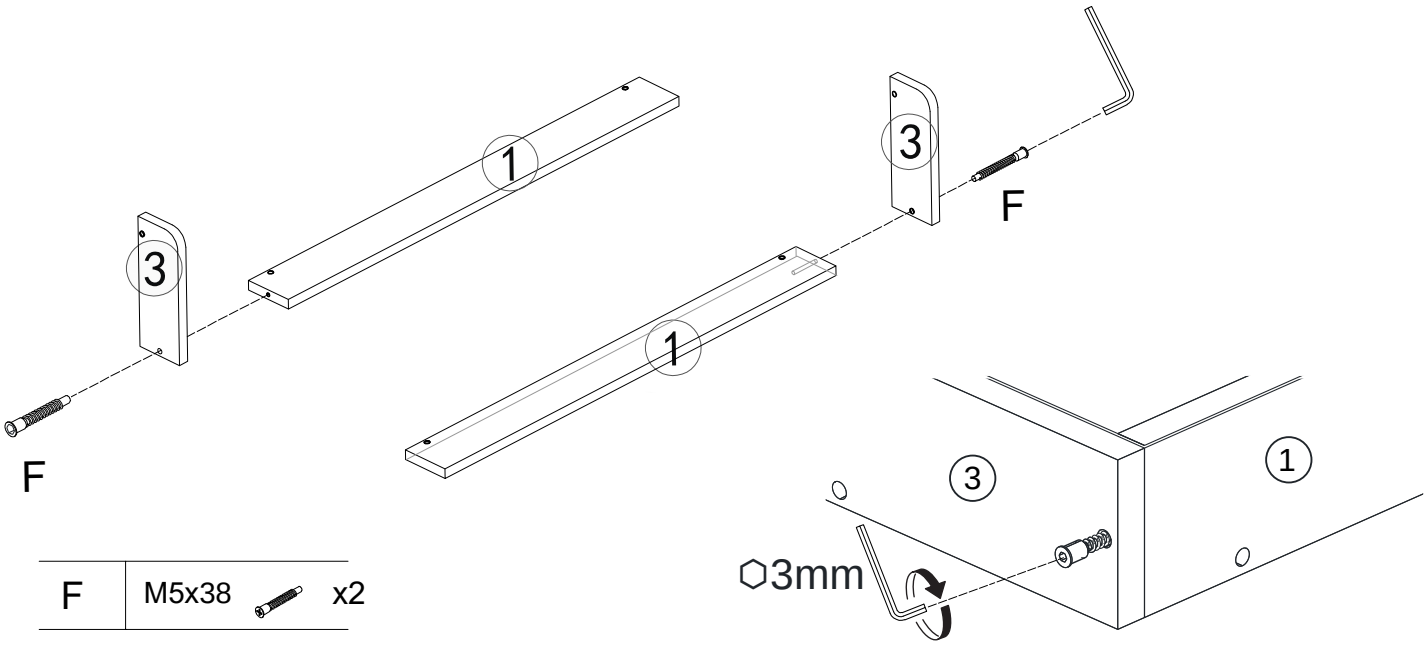

F	M5x38	x2

Step 8

Attach the two preassembled edge rail sections (①/③), then install edge rails ②, as shown.

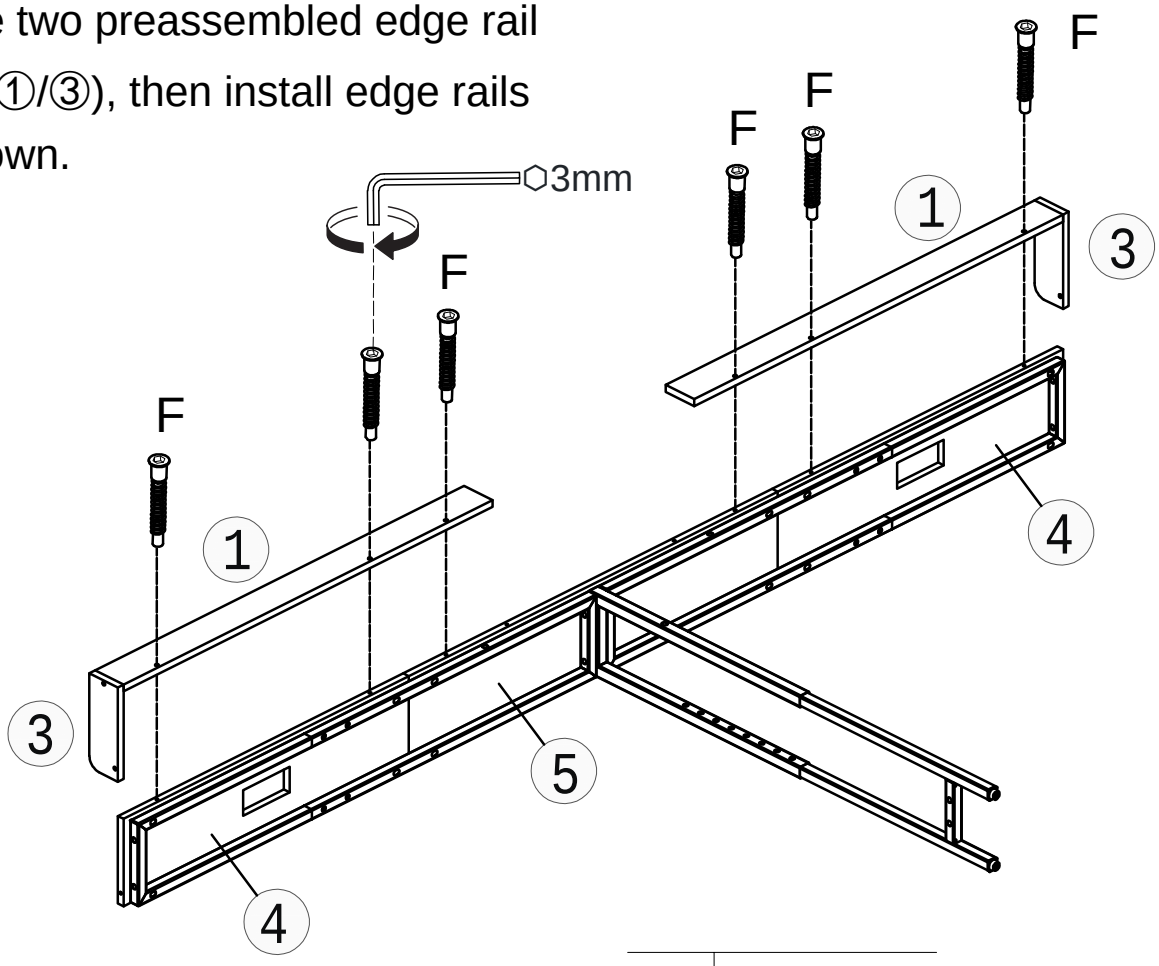

F	M5x38	x6

Step 9

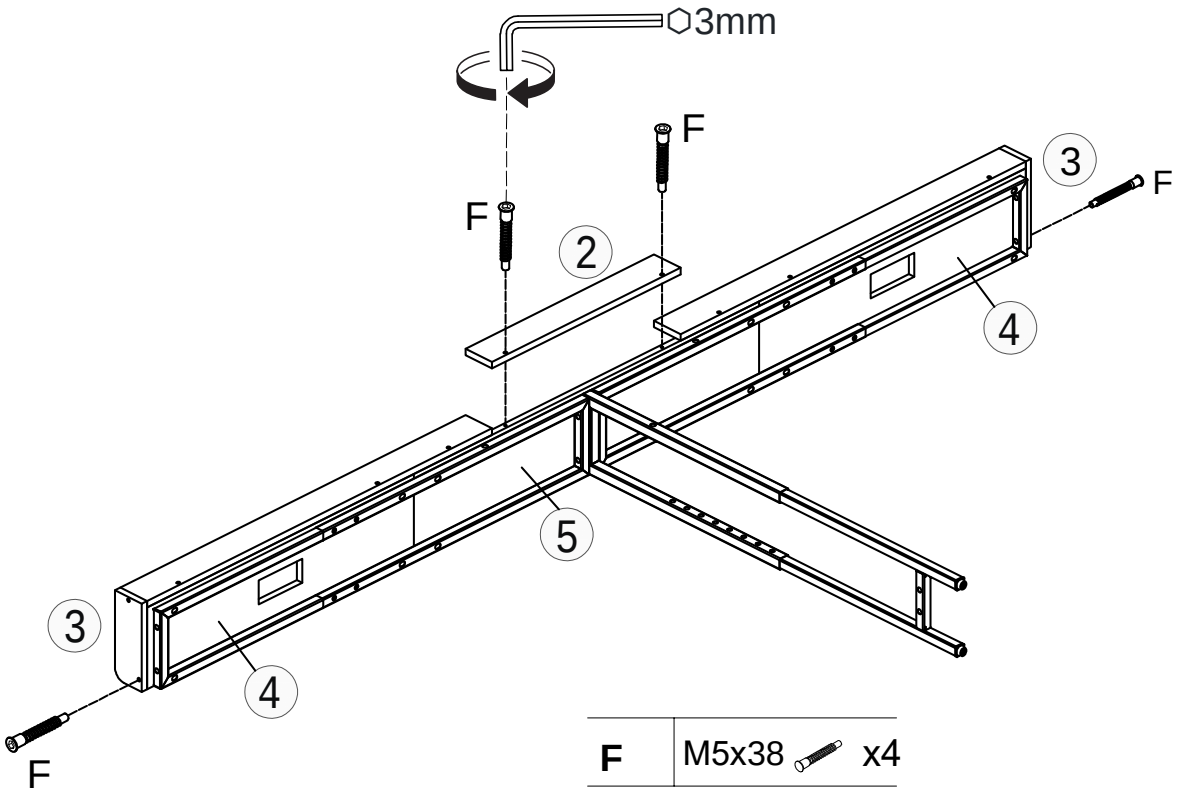

F	M5x38 x4

Step 10

Attach the two remaining leg assemblies using four (D) bolts and four (A) sleeve nuts, as shown.

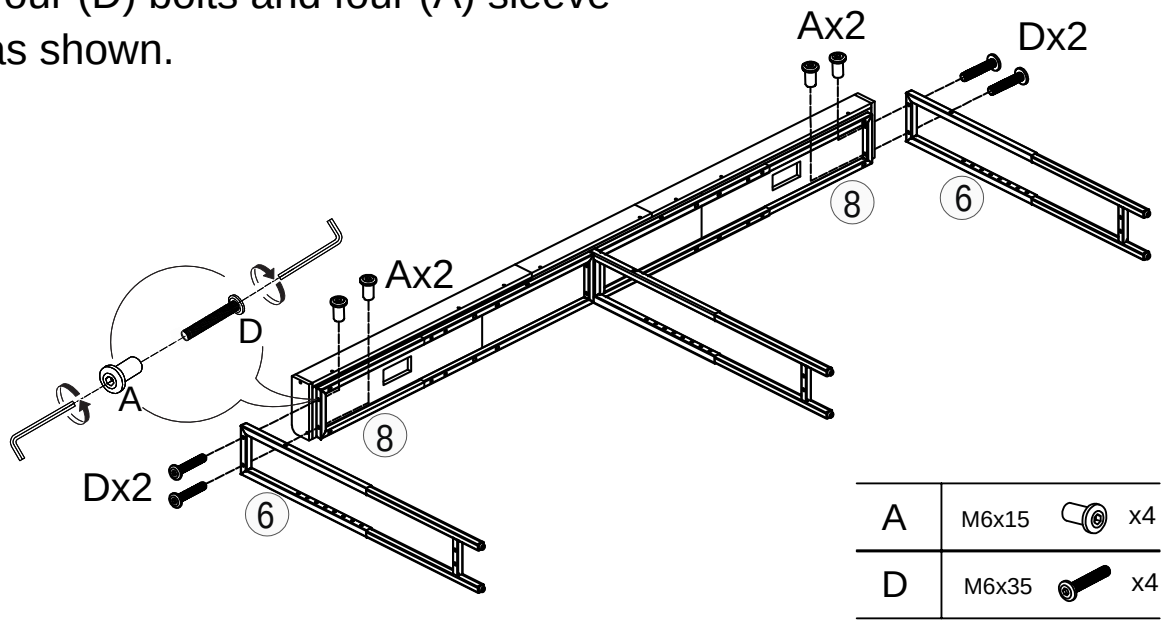

A	M6x15 x4
D	M6x35 x4

Step 11

Fully insert the sleeve at the top of part ⑪ into part ⑨.

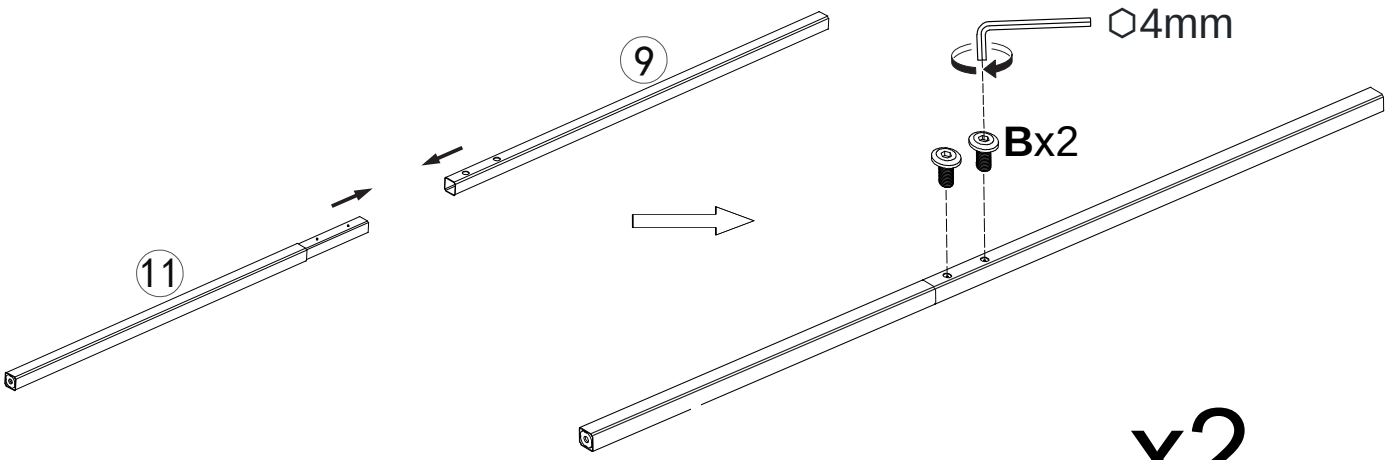

x2

B	M6x10 x4

Step 12

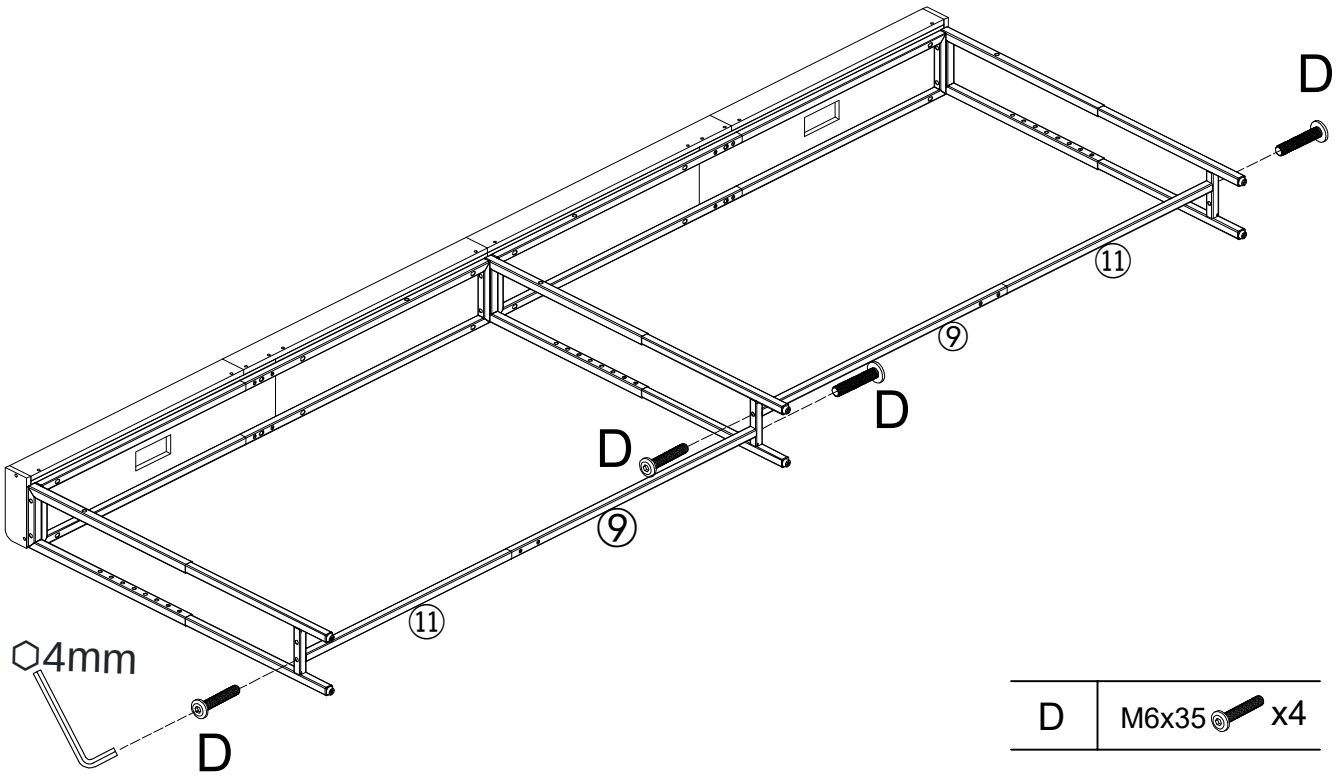

D	M6x35 x4

Step 13

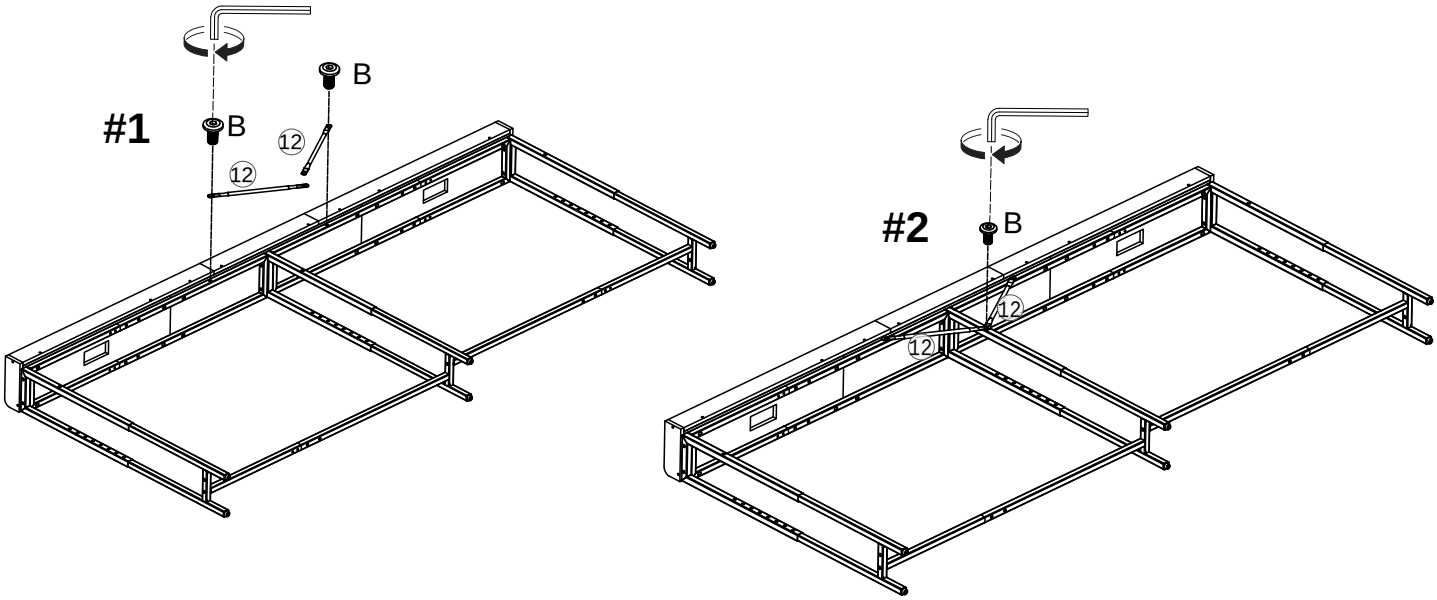

B	M6x10 x3

Step 14

Rotate the table from its side to an upright position. Avoid sudden or forceful movements, as they may damage the frame.

We recommend having two people complete this step.

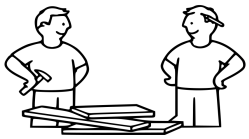

If working alone, lift at the center of the table to bring it upright.

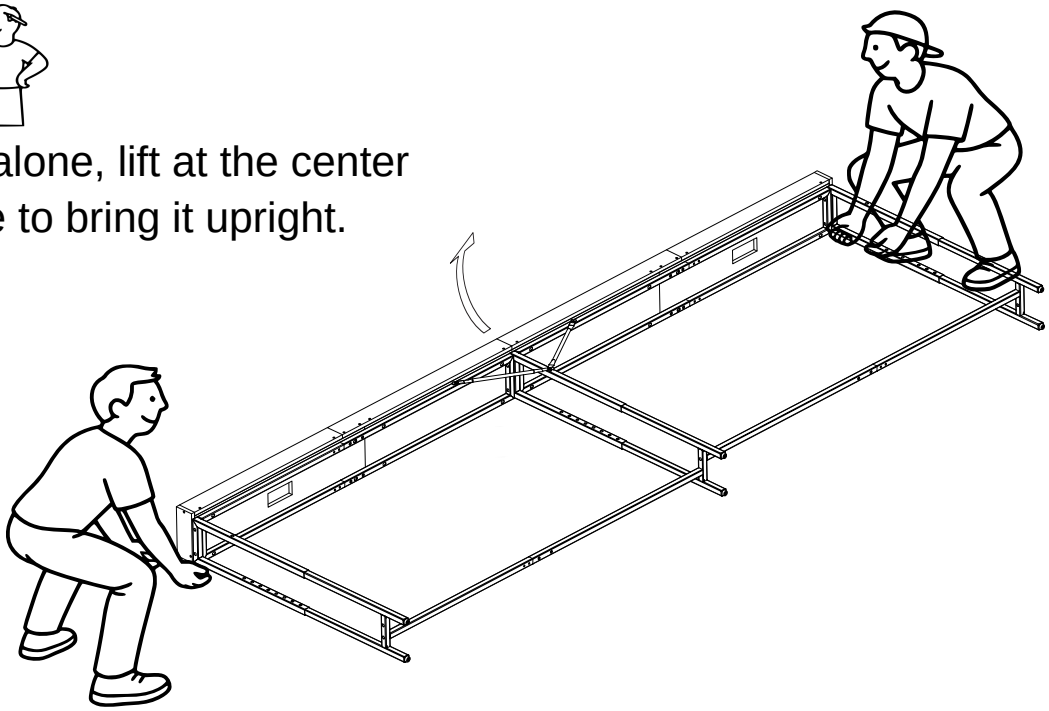

Step 15

WARNING — Risk of Electric Shock

Keep the power strips unplugged until installation is complete.

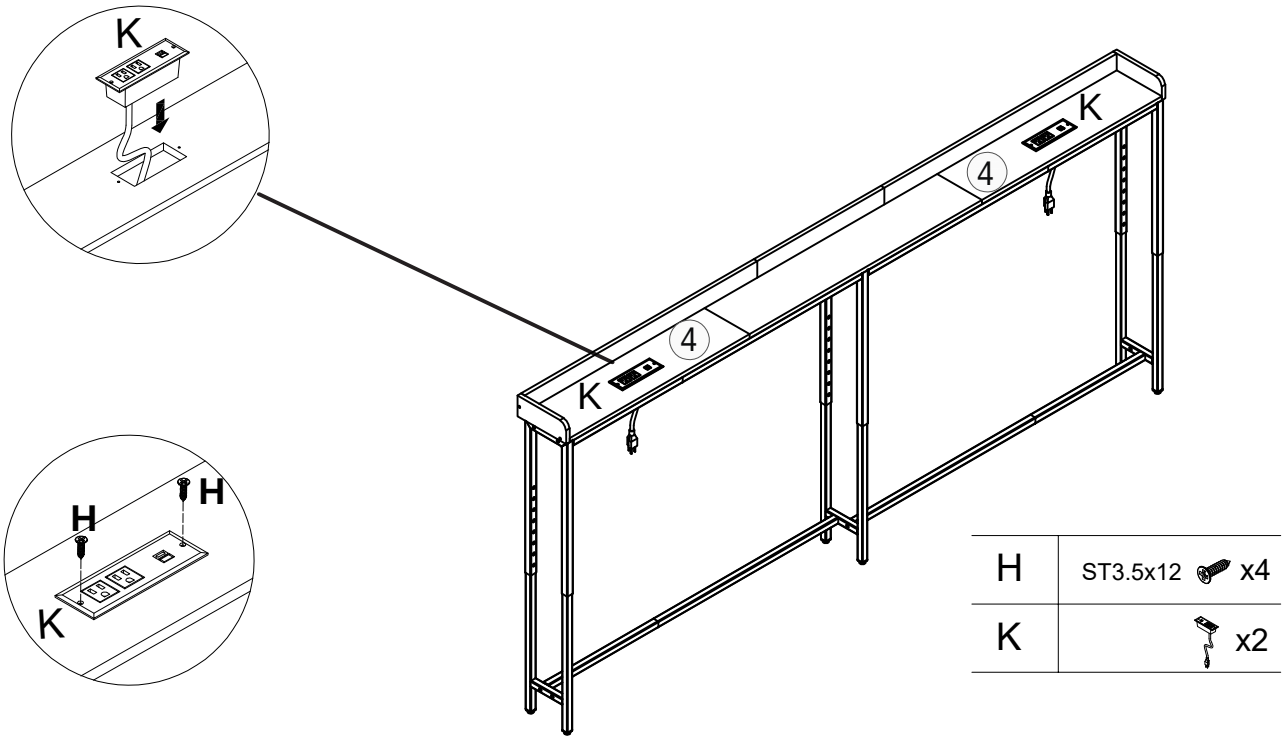

H	ST3.5x12 x4
K	x2

POWER STRIP SAFETY

Rating: 125V AC, 60Hz, 12A / 1500W max.
USB Output: 5V DC, 2.4A max.

WARNING — Risk of Fire or Electric Shock

- For indoor use in dry locations only. Keep away from water and spills.
- Plug directly into a grounded wall outlet. Do not use extension cords or connect power strips together.
- Do not exceed **12A** or **1500W** total across all outlets. Do not connect space heaters or other high-power appliances.
- Keep the cord from being pinched between the table, sofa, and wall. Unplug before moving or adjusting the table.
- Keep children from inserting objects into the outlets or USB ports.
- Stop use if the unit is damaged, overheats, or emits a burning smell. Do not open or repair it; contact customer support.
- Unplug before cleaning. Use a dry cloth only.

Step 16

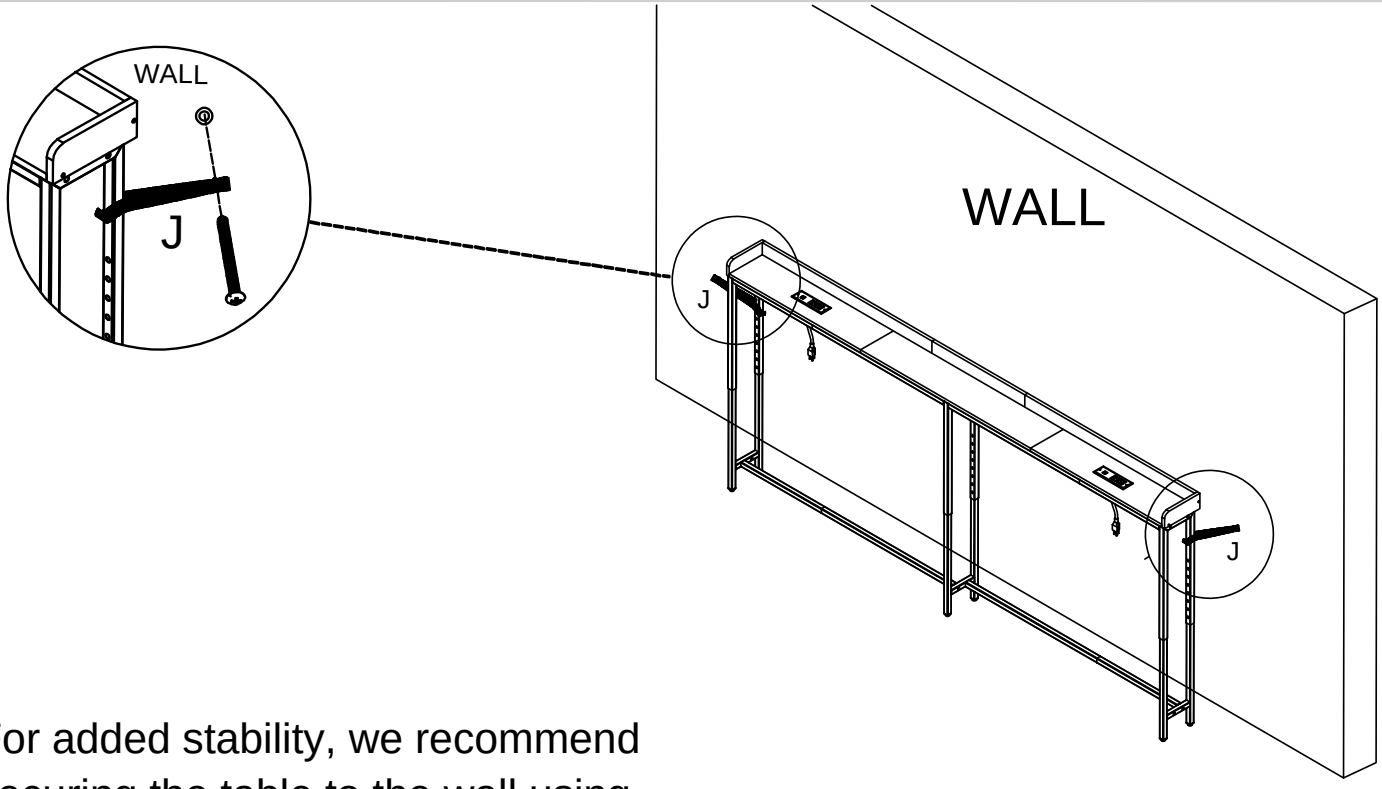

For added stability, we recommend securing the table to the wall using the included anti-tip kit.

J	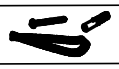	x2 sets

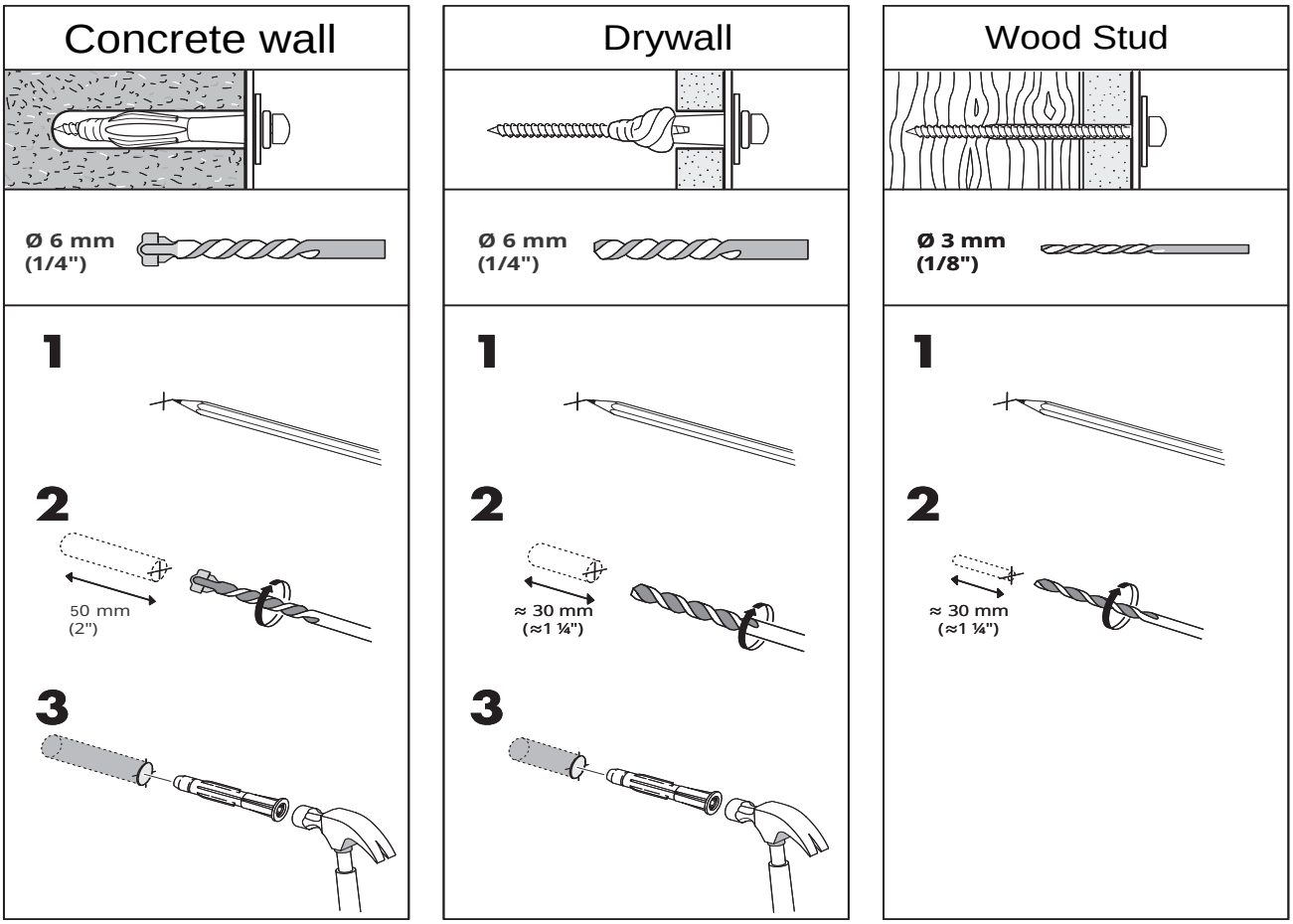

Before-Use Checklist

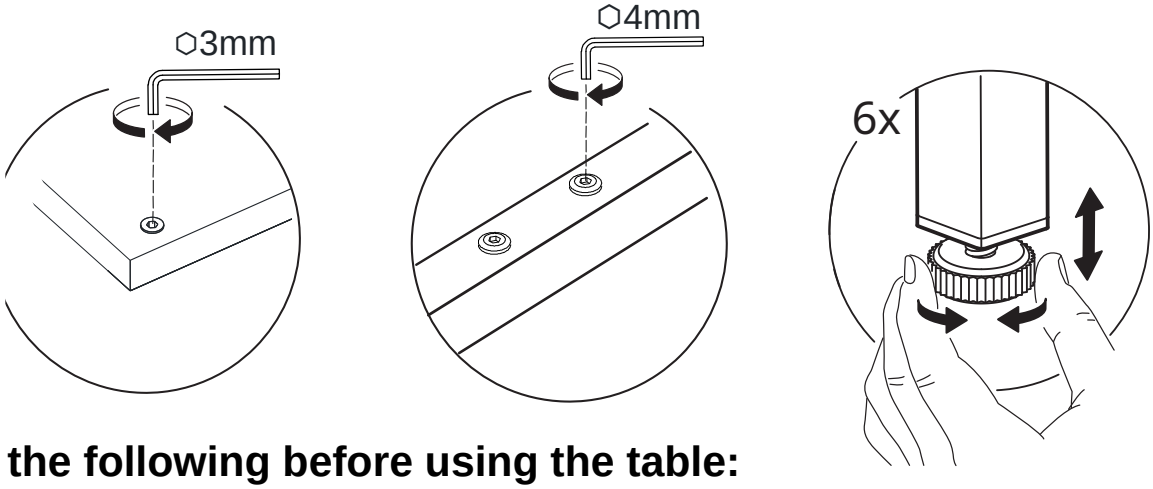

Check the following before using the table:

- All **screws** and fasteners are securely tightened.
- All **three leg** assemblies are set to the same height.
- All **six leveling feet** rest firmly on the floor.
- All support bars are properly installed and secured.
- If installed, the **anti-tip straps** are securely attached to both the table and the wall. We recommend using it for added stability.
- Both **power strips** are securely installed, and their cords and plugs are undamaged. Make sure neither cord is pinched before plugging in either power strip.

