28006-BK

OPERATIONS MANUAL

4 MODERN HOME

MADE IN CHINA

Assembly &Installation Instructions

Dear Customer:
Thank you for your business!
If you have any question or problem, please send us an email to support@4modernhome.com or call us at 469-312-6482. We will do everything possible to make you completely satisfied with your purchase. Product reviews help future customers to make their purchase decision.You are encouraged to share your experience by leaving a short product review on the platform where you bought this product.
Thank you!
4ModernHome

Warning: If any special control devices are used with this fixture, follow the instructions carefully to assure full compliance with N.E.C. requirements.If there are any questions, contact a qualified electric contractor.

Warning: California Residents Proposition 65 This product contains lead, a chemical known to the state of California to cause cancer and birth defects or other reproductive harm. Do not place the product in your mouth. Wash your hands after handling this product.

Caution: It is highly recommended to get an electrician to install this light. Please make sure to turn the electricity off at the main circuit breaker before beginning installation. All glass is fragile.Use care when handling glass component (s) and/or lamp(s).

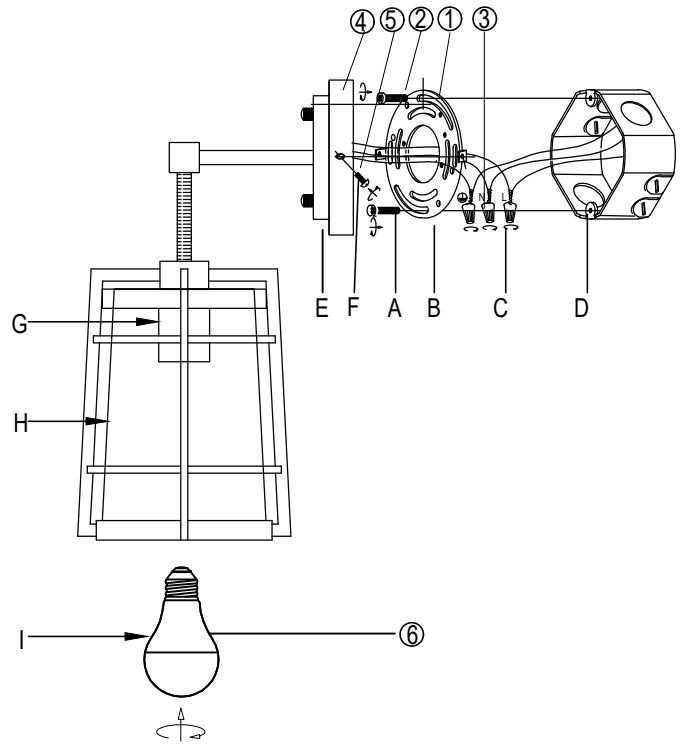

Applicable bulb type：
A19，A60，T45、ST58 ...
(Excluding bulb)

WIRE CONNECTION DIAGRAM

Wires meeting safety standards are required to connect the electical circuit

CAUTION: Risk of fire

Please read all instruction carefully.Before you proceed to install，make sure that the power supply is turned off and remains off until installation is completed.

PARTS INCLUDED

Code	Desctription	QTY
A	Mounting screws	2
B	Mounting bracket	1
C	Wire caps	3
D	Junction box	0
E	Canopy	1
F	Base screws	2
G	Lamp socket	1
H	Lamp shade	1
I	Bulb	0