MCWS002 Medical Laptop Cart Assembly Instructions

PARTS KEY:

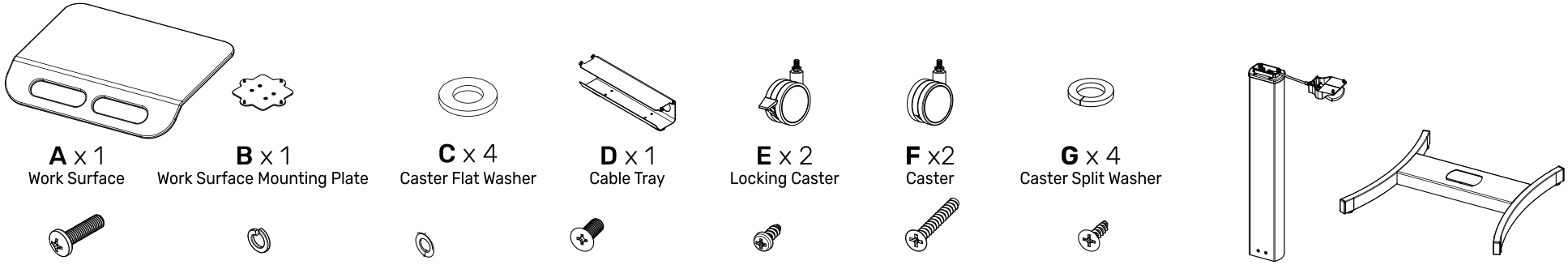

A x 1
Work Surface

B x 1
Work Surface Mounting Plate

C x 4
Caster Flat Washer

D x 1
Cable Tray

E x 2
Locking Caster

F x2
Caster

G x 4
Caster Split Washer

H x 6
Base Screw
M5x15mm Phillips

I x 6
Base Split Washer
M5

J x 6
Base Washer
M5

K x 4
Plate to Column Screw
M5x15mm
Flat Head Phillips

L x 8
Plate to Desktop
Cable Man to Desktop
Φ4x10mm Wood Screw

M x 2
Paddle to Desktop
Φ4x32mm Flat
Head Wood Screw

N x 2
Paddle to Desktop
Φ4x12mm Flat Head
Wood Screw

O x 1
Lifting Column

P x 1
Base

ASSEMBLY INSTRUCTIONS:

1

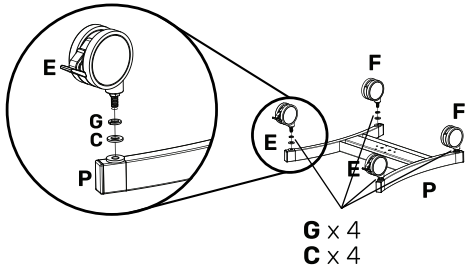

2

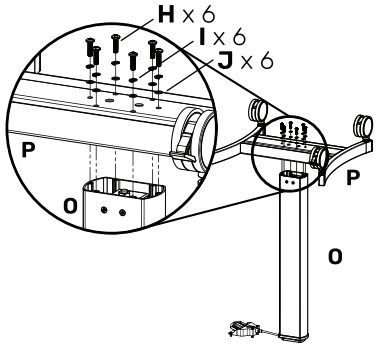

3

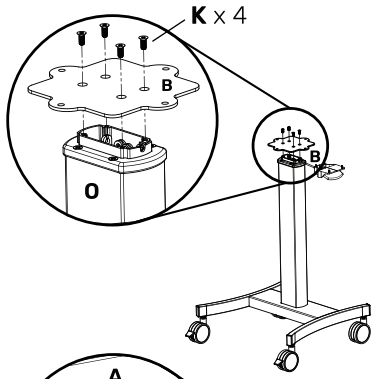

4

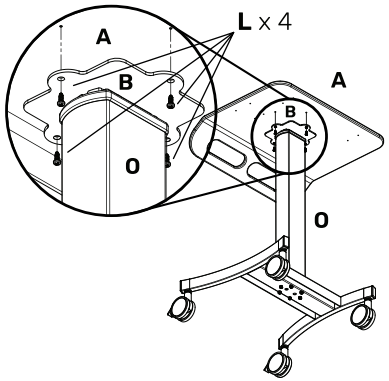

5

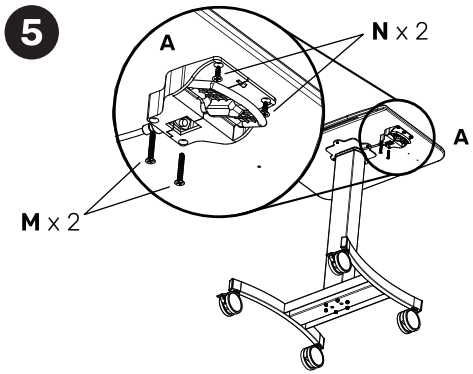

6

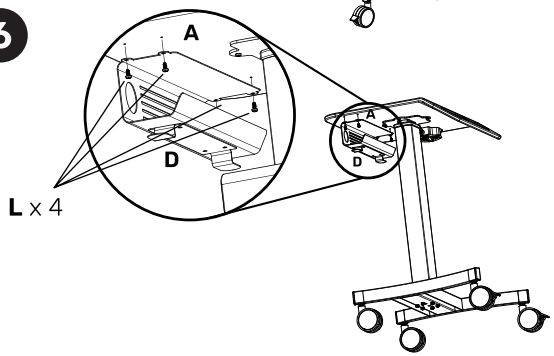

LUXOR

2245 Delany Road, Waukegan, IL 60087
(800) 323-4656 | Fax (847) 244-1818 | www.LuxorWorkspaces.com