Assembly Instruction For
End Table with USB

Caution: Please read instructions thoroughly before unpacking assembly parts. Sharp, exposed staple tips can cause injury, therefore, for your protection, please remove any exposed staples used in packing.

1. We recommend that you should assemble this product with the assistance of another person; this will make assembly easier, and will help to eliminate damage to the product or injury to persons during assembly.
2. Be sure to check all packing materials carefully for small parts that may have come loose inside the carton during shipment.
3. Please do not over tighten screws or bolts.
4. Please put all parts on a non-abrasive floor before assembly, and follow the assembly steps to assemble your newly purchased product correctly and efficiently.

PARTS LIST				
No.	PART DESC			Q'TY
A		Table Top		1
B		LHF/RHF Leg Frame		2
C		Base Shelf		1

HARDWARE LIST				
No.	HARDWARE DESC			Q'TY
1		ALLEN KEY (M4)		1
2		ALLEN BOLT (Ø1/4"*1-1/2")		12
3		SPRING WASHER (Ø1/4")		12
4		FLAT WASHER (Ø1/4")		12

⚠ Only tighten all bolts when all bolts aligned with bolt inserts

STEP:1

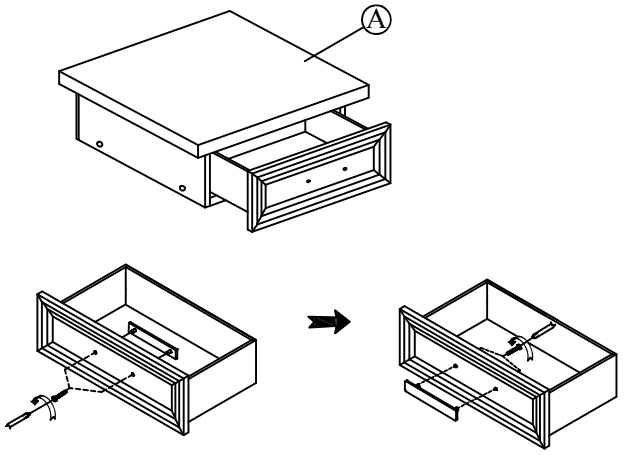

STEP:2

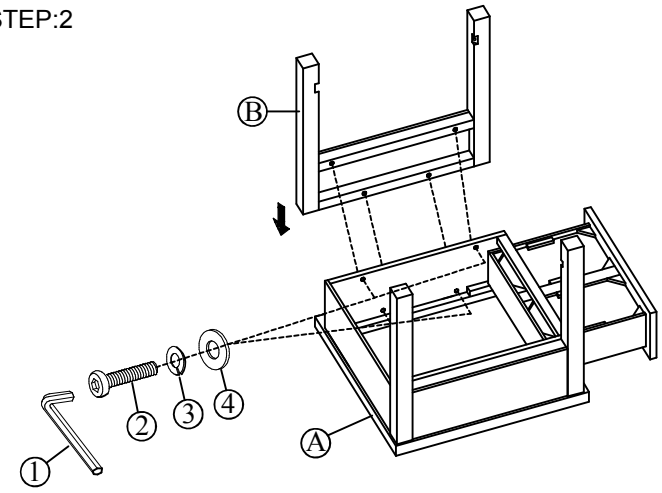

STEP:3

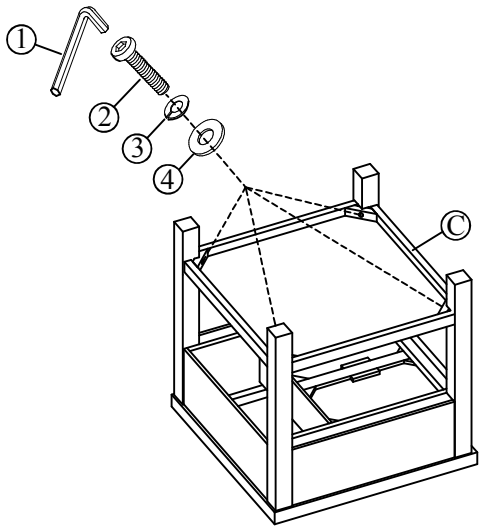

COMPLETED

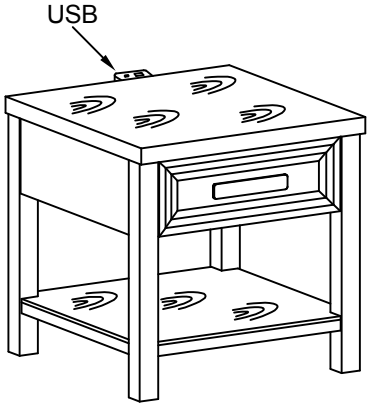

MADE IN VIETNAM

FCC Compliance Information

Product Name: AC / DC Adapter

This device complies with part 15 of the FCC Rules. Operation is subject to the following two conditions: (1) This device may not cause harmful interference, and (2) this device must accept any interference received, including interference that may cause undesired operation.

CAUTION : Changes or modifications not expressly approved by the party responsible for compliance could void the user's authority to operate the equipment.
NOTE : This equipment has been tested and found to comply with the limits for a Class B digital device, pursuant to part 15 of the FCC Rules. These limits are designed to provide reasonable protection against harmful interference in a residential installation. This equipment generates, uses and can radiate radio frequency energy and, if not installed and used in accordance with the instructions, may cause harmful interference to radio communications. However, there is no guarantee that interference will not occur in a particular installation. If this equipment does cause harmful interference to radio or television reception, which can be determined by turning the equipment off and on, the user is encouraged to try to correct the interference by one or more of the following measures:

- Reorient or relocate the receiving antenna.
- Increase the separation between the equipment and receiver.
- Connect the equipment into an outlet on a circuit different from that to which the receiver is connected.
- Consult the dealer or an experienced radio/TV technician for help.

MADE IN VIETNAM