ASSEMBLY AND INSTALLATION INSTRUCTIONS

WARNING: TO AVOID RISK OF ELECTRICAL SHOCK, BE SURE TO SHUT OFF POWER BEFORE INSTALLING OR SERVICING THIS FIXTURE.

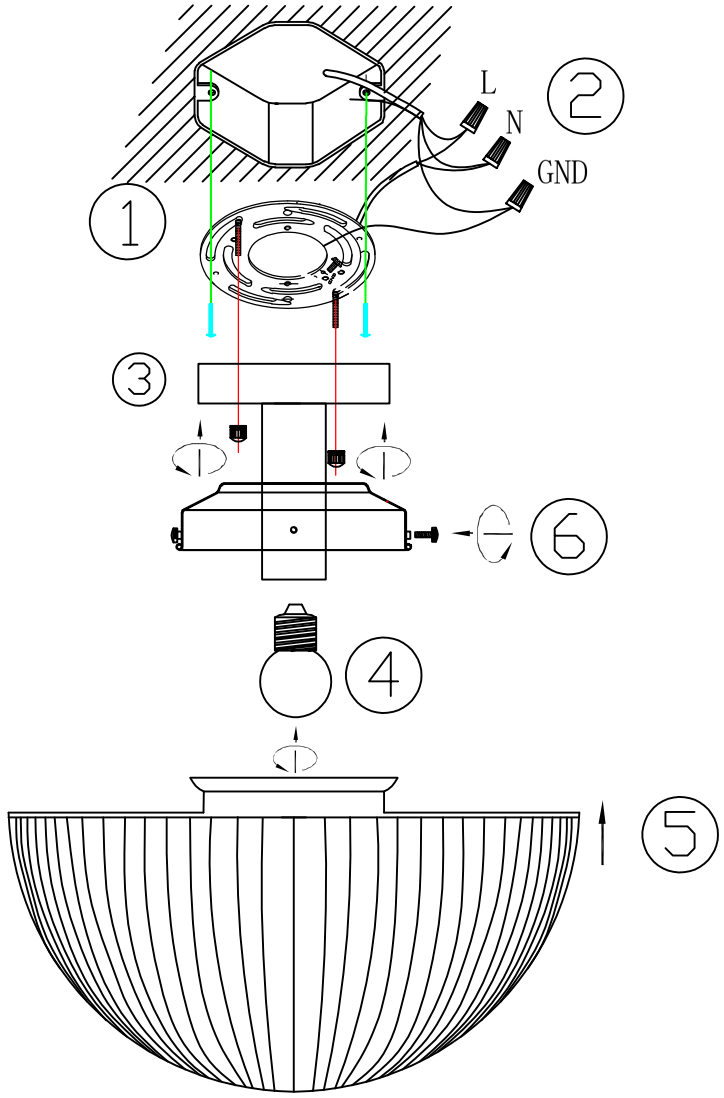

Before You Begin:

- Ensure power is turned off at the circuit breaker before installation.
- Read all instructions carefully.
- Installation should be performed by a qualified electrician if you are unfamiliar with wiring.

Step-by-Step Installation:

1. Use screws to lock and secure the mounting bracket into the US standard junction box.
2. Use wire nuts to connect the fixture's wires with the reserved wires in the junction box. (As shown below: connect the black wire to the house live wire, the white wire to the house neutral wire, and the ground wire to the house ground wire. Use the green grounding screw to connect the ground wire to the mounting bracket.) When wiring, please be careful to avoid exposing bare wires.
3. Cover the mounting bracket with the ceiling canopy, and then use decorative nuts to tighten and secure the canopy.
4. Install the light bulb (bulb not included).
5-6. Snap the lamp shade into the lamp body, and then tighten and secure it with thumbscrews (just gently twist it into place).

Safety Instructions:

To avoid fire, shock, and serious personal injury, follow all instructions carefully.

1. Do not install or use the light fixture if any part is missing or damaged.
2. To avoid possible electrical shock, be sure electricity is turned off at the main fuse or circuit breaker box before wiring.
3. Make certain no bare wires are exposed outside the wire connectors.
4. All wiring must conform to national and local electrical codes.
5. Follow the recommended instructions for the proper method of wiring your new light fixture. If you feel you do not have enough electrical wiring knowledge or experience, have your light fixture installed by a licensed electrician. Any electrical work not described in this manual should be performed by a licensed electrician.