INSTRUCTION MANUAL

BATHROOM VANITY

Attach Your Receipt Here

Model Number_____ Purchase Date_____

Thank you for purchasing this quality product. Please carefully inspect all packing materials and check the carton for small parts that may have come loose during shipping.

TABLE OF CONTENTS

1. Before You Begin.....3

2. Safety Warnings.....3

3. Tools Required (Not Supplied) 3

4. Installation Instructions.....4

5. Parts Replacement Guides.....8

5.1 Side Panel Replacement.....9

5.2 Drawer Panel Replacement.....10

6. Care & Maintenance.....11

6.1 Scratches and Cracks Treatment..... 11

6.2 Daily Maintenance.....11

* Please verify the model on the package you received. Use the table above to confirm the product type of your item based on its model number. Different types correspond to different contents and installation methods.

1. BEFORE YOU BEGIN

1. Please read these instructions carefully to familiarize yourself with the required tools, materials, and installation sequences.
2. To avoid costly mistakes, please thoroughly follow the operating and safety instructions below.
3. All information in this manual is based on the latest product information available at the time of publication. We reserves the right to change product specifications, packaging, or availability at any time without notice.
4. Please carefully review the important care and cleaning guidelines at the end of this manual.

2. SAFETY WARNINGS

Our products are precision-engineered to provide superior and safe performance, provided the following guidelines are met:

1. They are installed, commissioned, operated, and maintained according to the recommendations in this manual.
2. To keep the product in good working order, periodic maintenance is necessary. Carefully inspect the new fixture for any signs of damage. When installing the products, follow the manufacturer's guidelines for power tool safety.

3. TOOLS REQUIRED (NOT SUPPLIED)

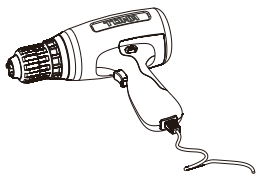

Drill



Φ 8

Drill bit

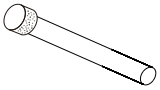

Φ 8

Glass drill

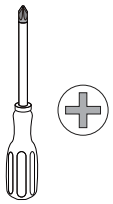

Screwdriver



Spirit level



Ruler

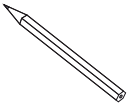

Pencil



Silicon sealant

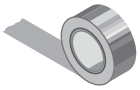

Masking tape

4. INSTALLATION INSTRUCTIONS

4.1 Wall-mounted Bathroom Vanity

Part List

Cabinet

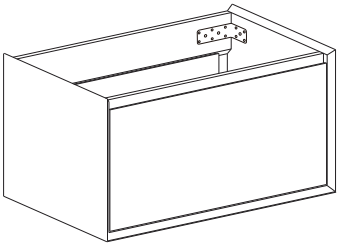

Basin

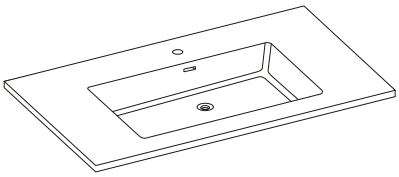

Fixed Accessories

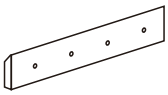

Hanging Bracket

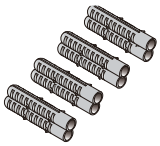

Φ8X40mm



M4X50mm M4X70mm

*Number and shape of accessories may vary by product size.

Step 1: Remove Drawers

1

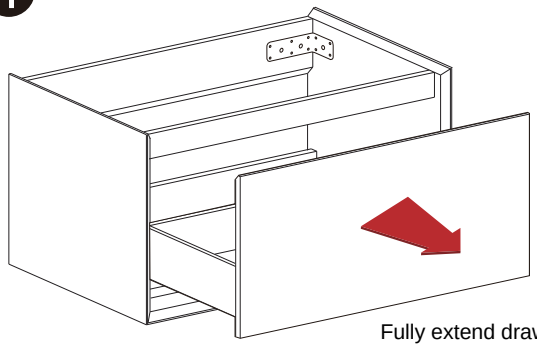

Fully extend drawers

2

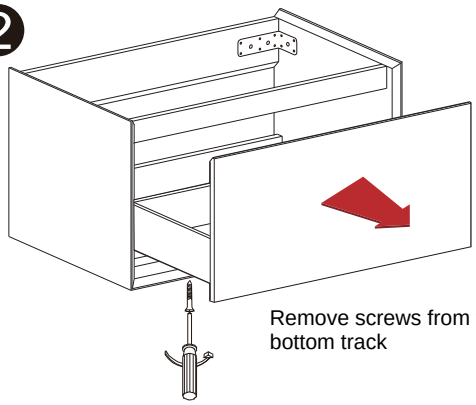

Remove screws from the bottom track

3

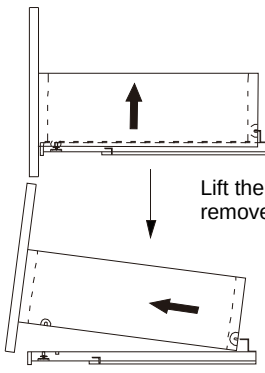

Lift the drawer gently to remove it from the tracks

4

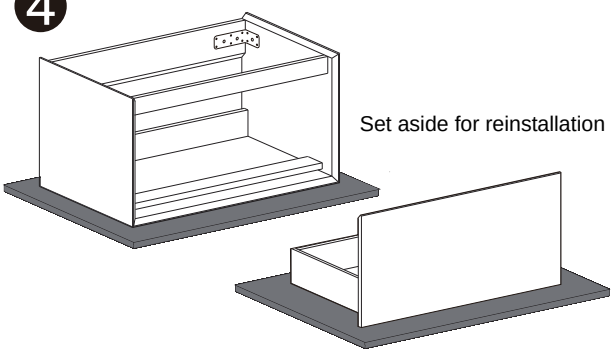

Set aside for reinstallation

4. INSTALLATION INSTRUCTIONS

Step 2: Mount the Vanity on the Wall

1

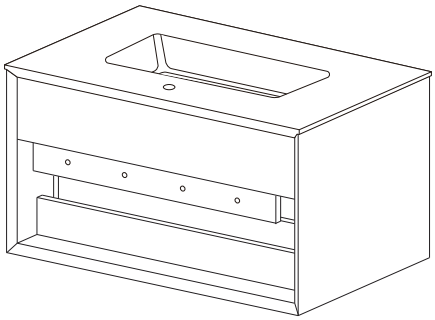

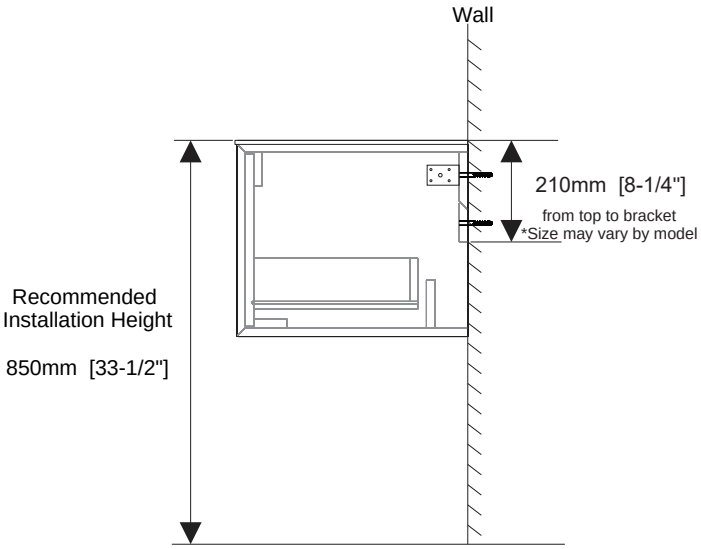

2

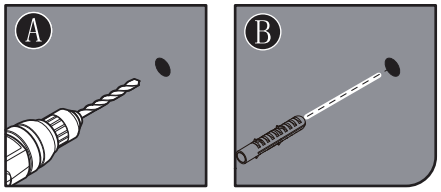

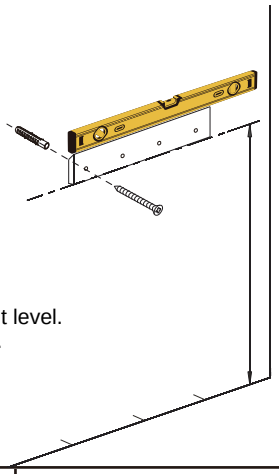

Position the bracket on the wall and level it with a spirit level.
Mark the positions, drill holes, and insert wall anchors.
Secure the bracket with the provided bolts.

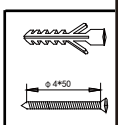

3

Lower the cabinet onto brackets, ensuring it hooks securely.

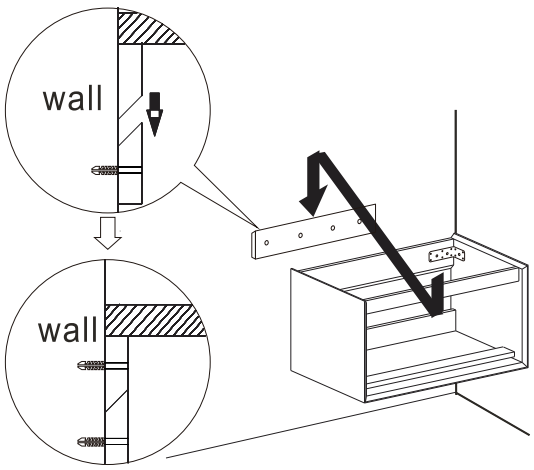

4

Mark the cabinet hole positions, drill holes, insert wall anchors, and secure it with the provided bolts.

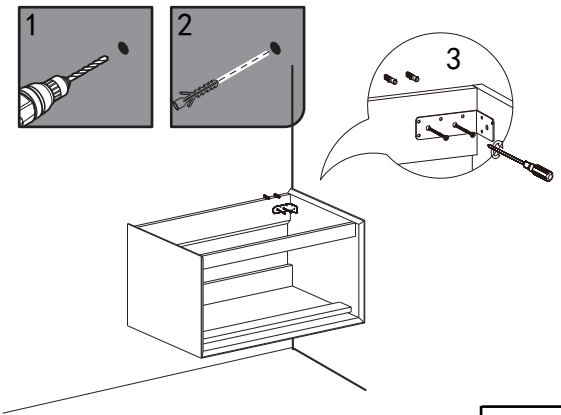

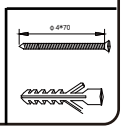

4. INSTALLATION INSTRUCTIONS

Step 3: Install the Countertop

1. Apply the silicone sealant in a continuous bead along the top edges of the cabinet

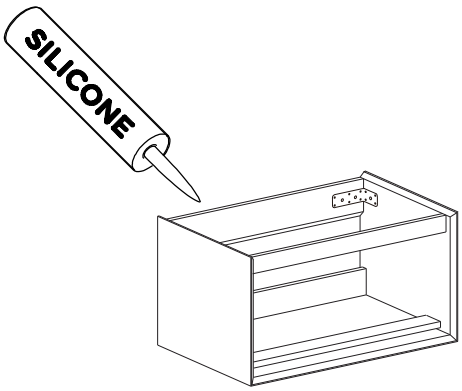

2. Install the faucet, water supply lines and drain assembly. Place the top on the cabinet.
Allow to stand for 24 hours.



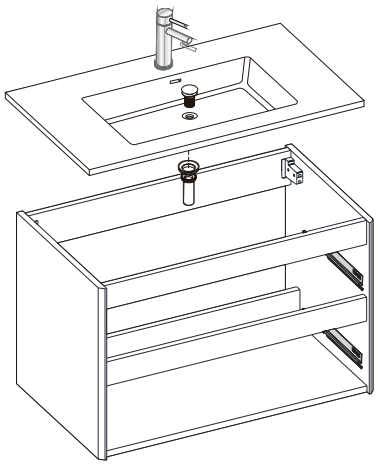

Step 4: Reinstall Drawers

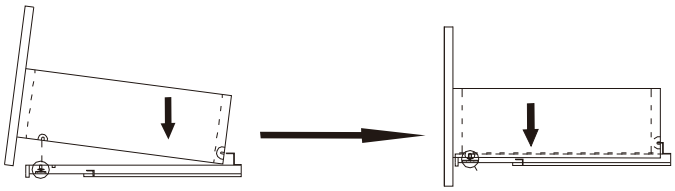

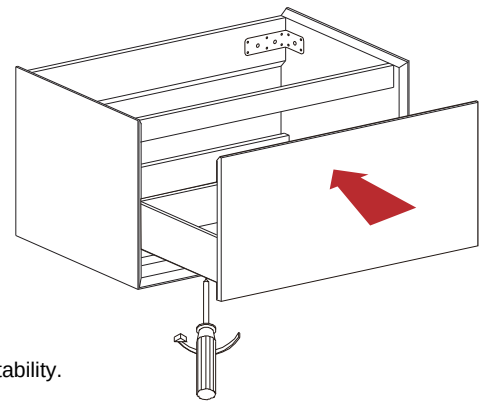

Pull out the sliding tracks and align the drawer slots.
Securely tighten the screws underneath the drawer slides to ensure stability.

4.2 Freestanding Bathroom Vanity

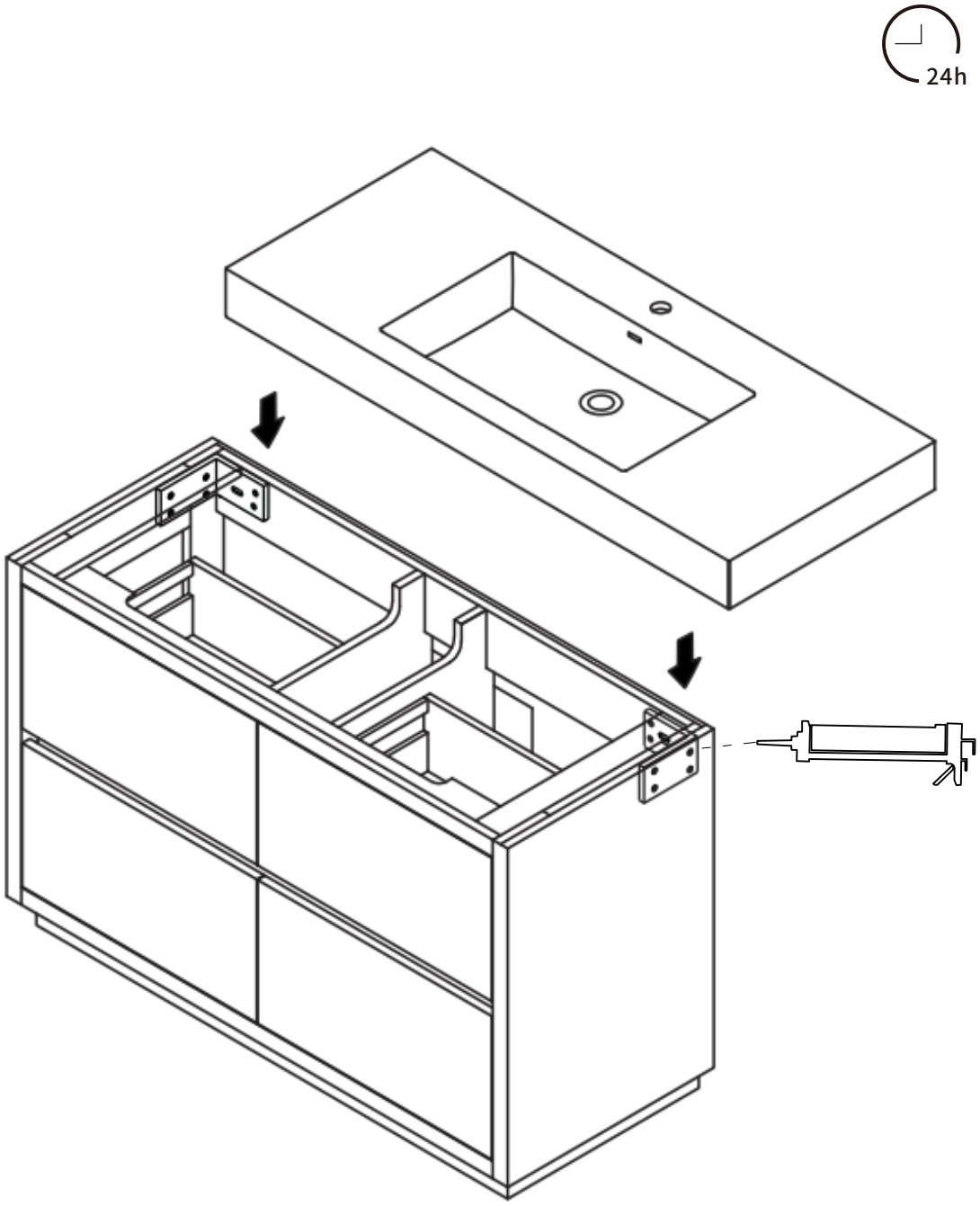

Apply a continuous bead of silicone along the cabinet's top edges. Place the top on the cabinet and wipe off excess sealant with a damp cloth. Allow to stand for 24 hours.

5. PARTS REPLACEMENT GUIDE

Products are pre-assembled but may suffer minor damage in transit. Please contact customer service for free replacement parts if required. Please follow the instructions strictly when installing the parts.

H1	H2	H3	H4	H5	H6
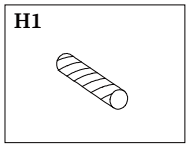	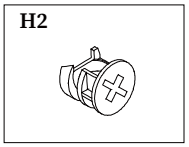	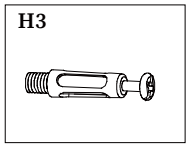	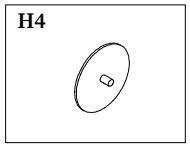	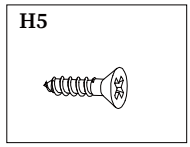	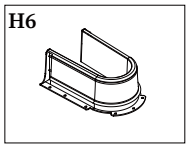
8*ϕ8*30	54*（600-900） 58*（1000）	54*（600-900） 58*（1000）	54*（600-900） 58*（1000）	52*ϕ4*16	2*

H7	H8	H9	H10	H11	H12
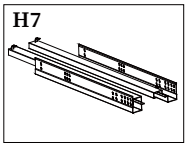	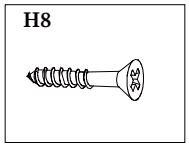	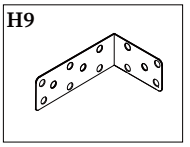	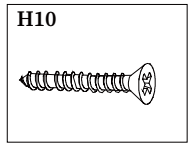	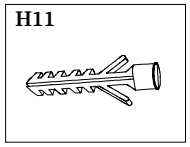	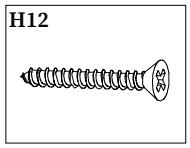
2*	4*ϕ4*25	2*	4*ϕ4*50	8*ϕ8*40	4*ϕ4*70

Stand-by Spare Parts

H2	H3
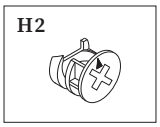	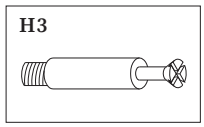
2*	2*

H5
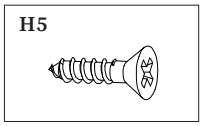
2*

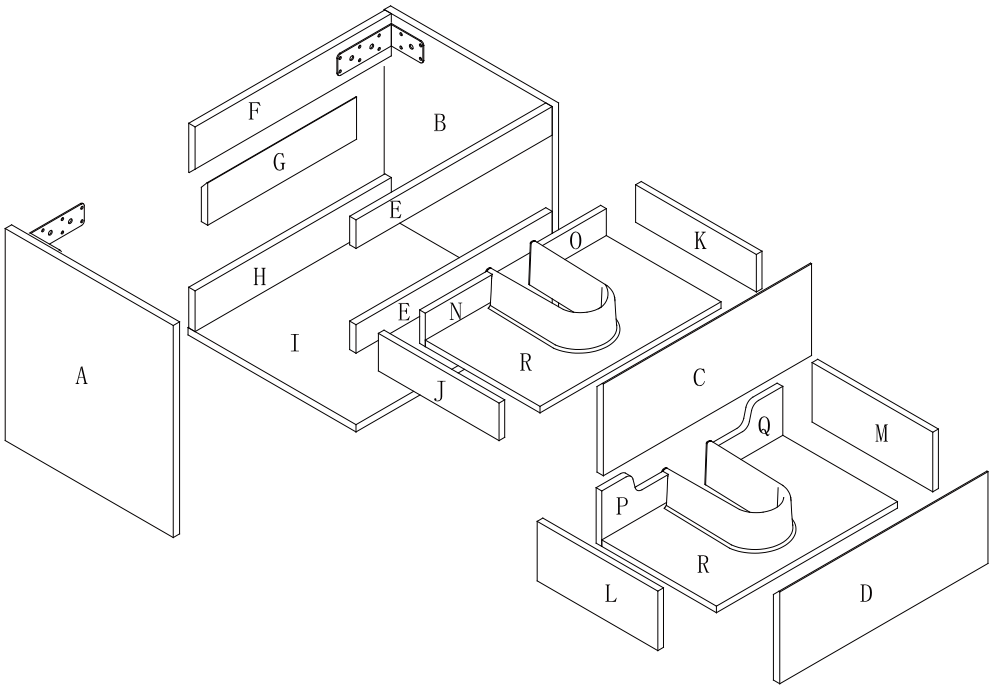

Refer to the exploded view drawing above to identify the part number for your damaged panel.
*Number and shape of accessories may vary by product size.

5. PARTS REPLACEMENT GUIDE

5.1 Side Panel Replacement

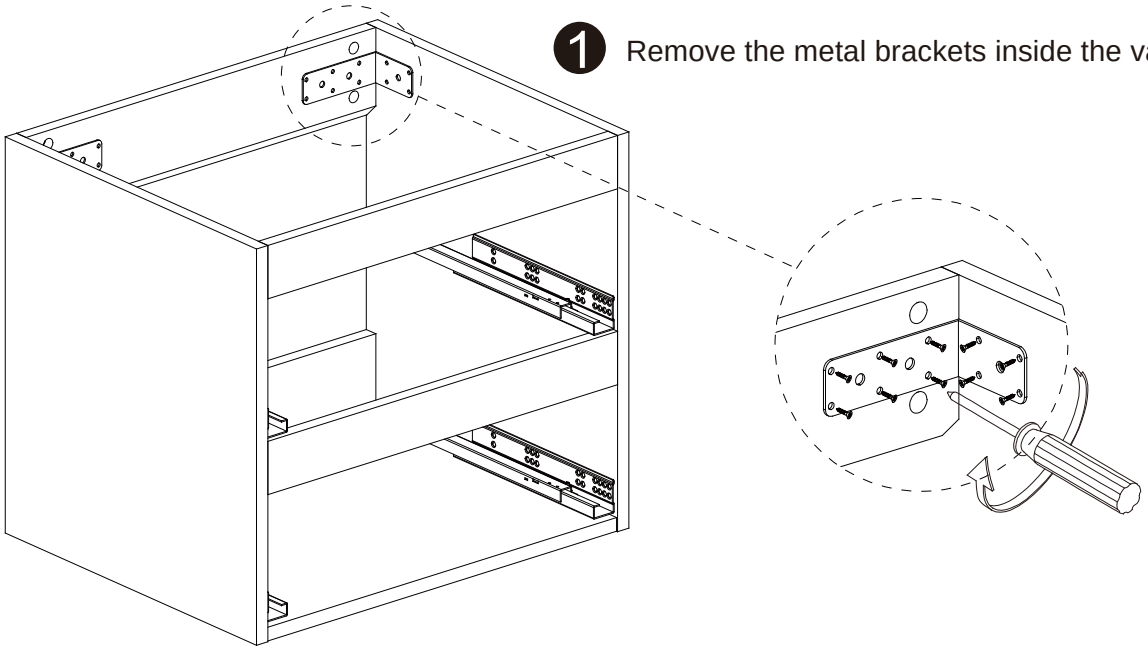

1 Remove the metal brackets inside the vanity.

2 Remove the screws from the side panel as shown in the diagram below.

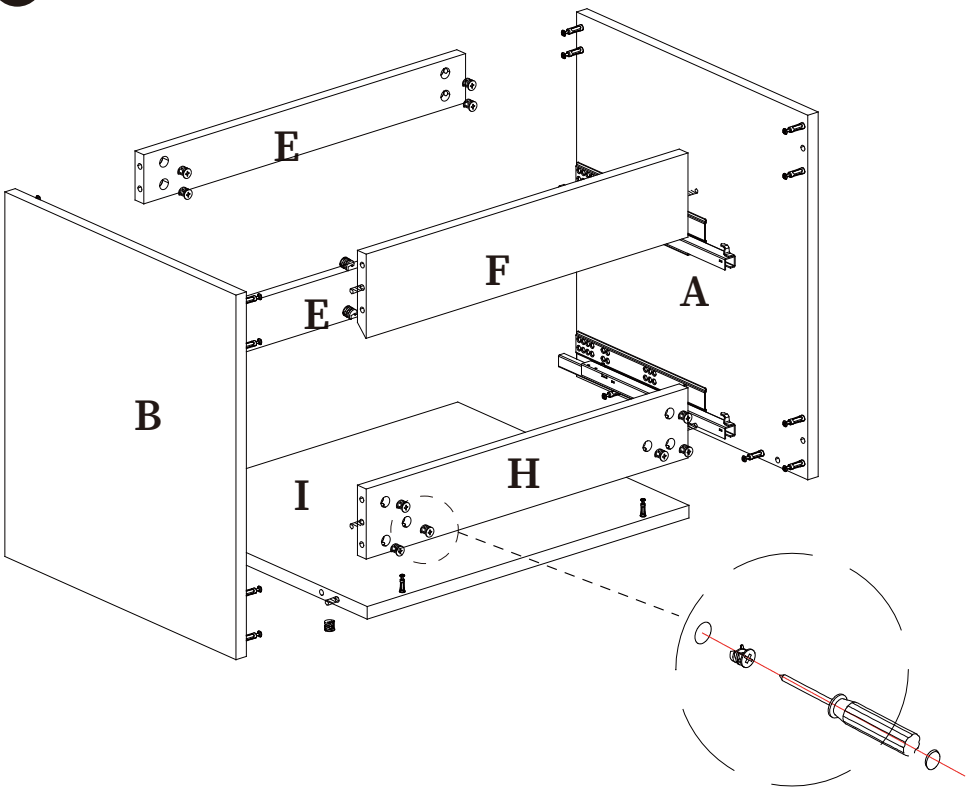

5. PARTS REPLACEMENT GUIDE

❸ Detach the drawer slides from the original side panels and transfer them to the new panels. Then follow steps 2 and 1 to reinstall the side panels. Ensure the panels orientation (left or right) is correct and confirm that no necessary mounting hardware is missing.

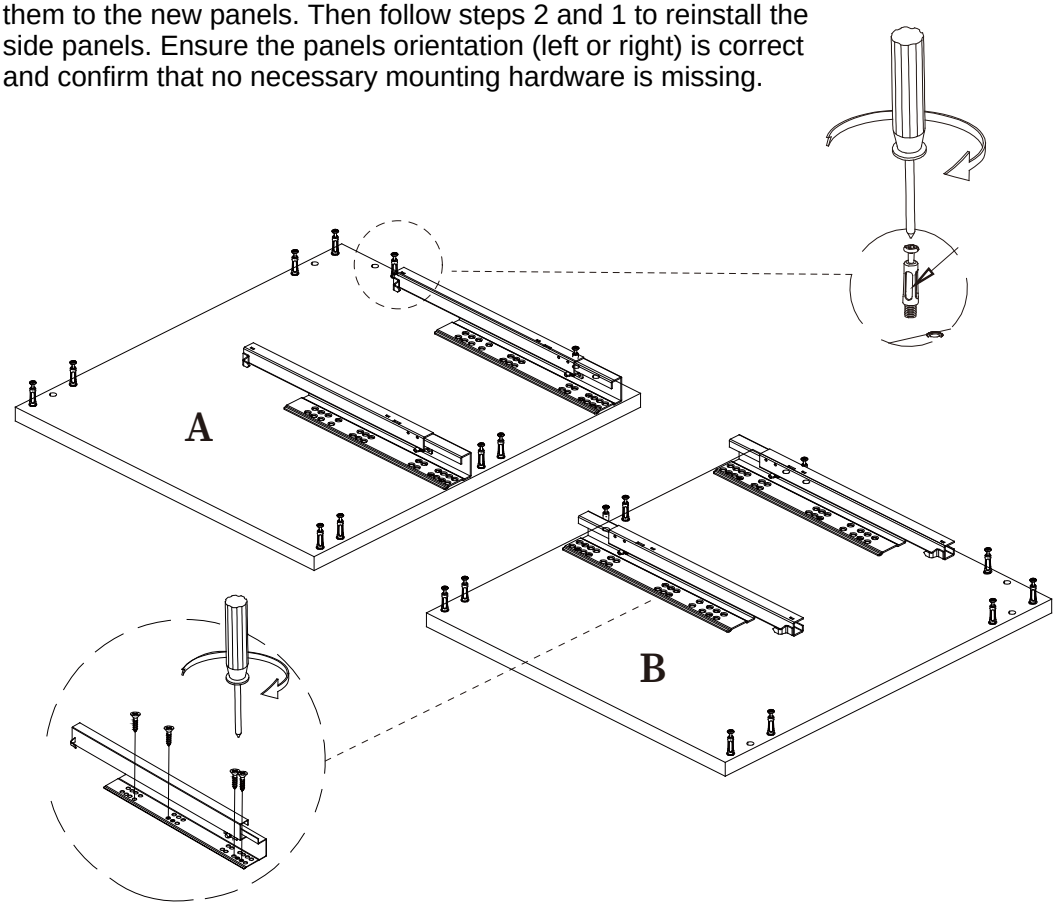

5.2 Drawers Panel Replacement

Remove the drawer panel screws as indicated in the diagram, detach the damaged panel, and then install the new panel.

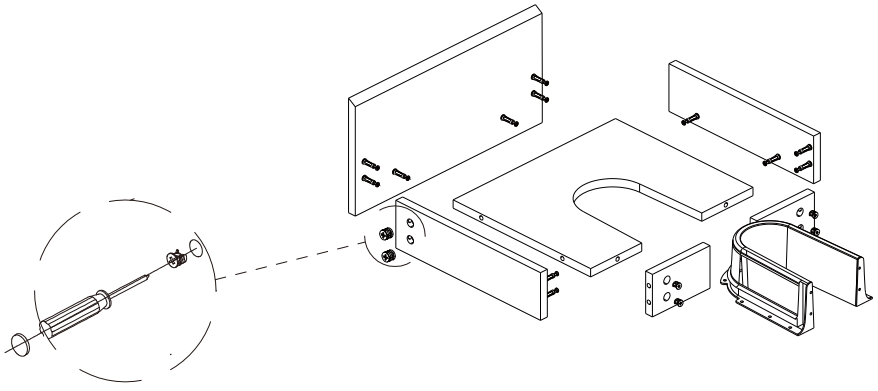

6. CARE & MAINTENANCE

6.1 Scratches and Cracks Treatment

Scratches or cracks are rare with our products. However, if you do notice any minor scratches or cracks, we recommend using a professional Sink Fiberglass Tub Repair Kit designed to match your countertop’ s color. Should you be uncertain about which kit to purchase, please contact our customer service team. We are here to assist you in selecting the right repair kit for a seamless and satisfactory fix.

How to Use the Repair Kit:
Step 1: Thoroughly clean the surface of the area to be repaired.
Step 2: Mix equal parts of A and B (1:1 ratio) according to the instructions provided.
Step 3: Stir the mixture for 3-5 minutes until it is fully blended and even.
Step 4: Apply the mixed product to the damaged area, spreading it evenly and smoothing it out.
Step 5: Allow the repair adhesive to cure for at least 2-3 hours. Once cured, use sandpaper to smooth the surface.
Step 6: After sanding, ensure that the surface is smooth and level.

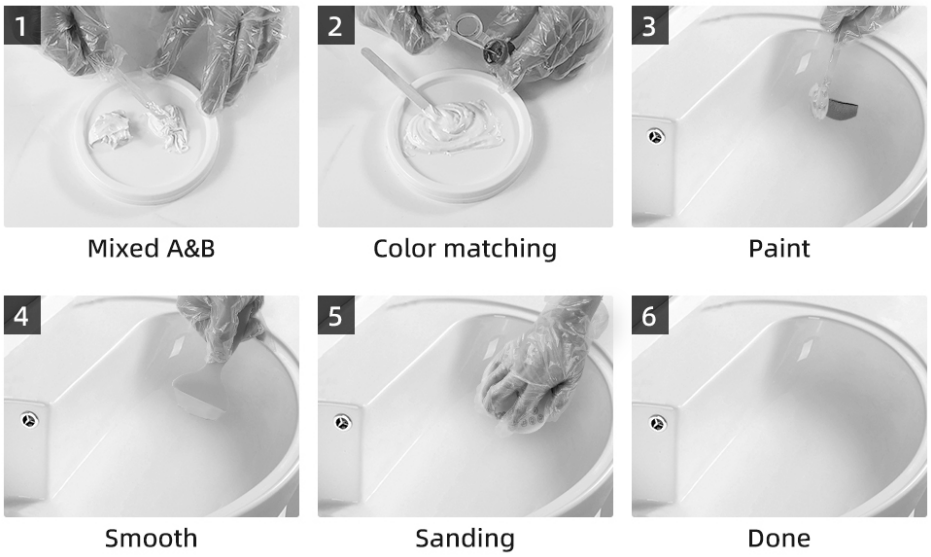

For substantial cracks or significant damage affecting usage, please contact our customer service team. We can offer a replacement based on the damage extent. Your satisfaction is our priority, and we are dedicated to providing excellent service.

6.2 Daily Maintenance

To extend the life of the product, please do the maintenance work every day. The following methods are for reference only.

- Please dry the cabinet immediately with clean, soft cloth when it encounters water.
- When the product is stained with dirt, wipe the cabinets clean with a soft, damp cloth, apply some cleaners, and dry immediately with another clean, soft cloth.
- The water supply pipes, the drainage pipes, and the connection parts are prone to water leakage under different circumstances. Please check these parts regularly to avoid accidents due to water leakage.
- After the product is used for a period of time, dirt will remain on the drain plug, which will affect drainage, so the plug needs to be cleaned regularly.

6. CARE & MAINTENANCE

KEEP CABINET AWAY FROM WATER, which will cause deformation and damage.

CAUTION



DO NOT put lit cigarettes on the counter or basin, which will cause discoloration.

CAUTION



DO NOT pour acid or alkaline solutions into the basin, which will cause discoloration, leak or damage.

CAUTION



AVOID DIRECT SUNLIGHT, which may cause deformation and discoloration.

CAUTION



AVOID HEAT, which will cause deformation and discoloration.

CAUTION

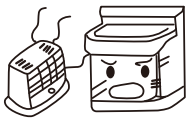

DO NOT pour hot water into the basin, which may cause damage.

CAUTION



AVOID nylon brush, toilet cleaner or hydrochloric acid cleaner, which will cause damage

CAUTION



AVOID dropping hard objects into the basin, which may cause damage.

CAUTION

