VEVOR

Upgrade · The Home Creator Way

DVD STORAGE

USER MANUAL

MODEL NO.: DX0202-C250421S-01-Black, DX0202-C250421S-02-Brown

VEVOR

Support Center

DX0202-C250421S-01 -Black

DX0202-C250421S-02 -Brown

VEVOR
Upgrade·The Home Creator Way

DVD Storage

MODEL NO.: DX0202-C250421S-01-Black, DX0202-C250421S-02-Brown

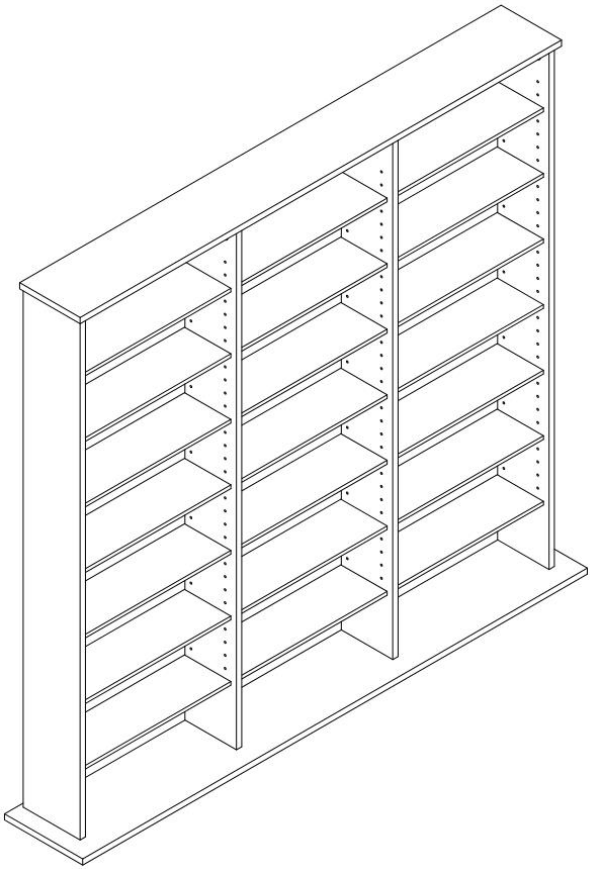

This is the original instruction, please read all manual instructions carefully before operating. VEVOR reserves a clear interpretation of our user manual. The appearance of the product shall be subject to the product you received. Please forgive us that we won't inform you again if there are any technology or software updates on our product.

WARNING:

Please read this manual carefully before using the product. Failure to do so may result in serious injury.



Please read and observe carefully all the assembly instructions before beginning assembly.



Unit should be assembled by two or more people.



Please do not let your child climb on the product.If you have kids or animals who like to climb, we highly recommend using the wall anchors and brackets/straps that come with the package.

ASSEMBLY PRECAUTIONS

1. The product complies with relevant standards and regulations. Installation of this device must comply with all applicable regulations, and it should only be operated in well-ventilated areas. Please read the user manual before installing and using this equipment.

2. This appliance is not intended for use by persons (including children) with reduced physical, sensory or mental capabilities, or lack of experience and knowledge, unless they have been given supervision or instruction concerning use of the appliance by a person responsible for their safety.

3. Children shall not play with the appliance.

4. This appliance shall not be used by children. Keep the appliance and

its cord out of reach of children.

5. Assemble only according to these instructions. Improper assembly can create hazards.

6. Wear ANSI-approved safety goggles and heavy-duty work gloves during assembly.

7. Keep the assembly area clean and well-lit.

8. Keep bystanders out of the area during assembly.

9. Do not assemble when tired or when under the influence of alcohol, drugs or medication.

10. The product capabilities apply to properly and completely assembled products only.

11. Assemble on a flat, level, hard and smooth surface capable of safely supporting the DVD Storage.

12. This produce is intended to be used in household and similar applications such as:

- For household storage and organization;
- Office and training institutions；
- Exhibition hall and store

13. Please properly keep product. Check whether the product is abnormal before use. If it is abnormal, please stop using it.

14. Please use the product according to the intended use, warn of potential injury from misuse.

15. For additional information regarding the parts listed in the following pages, please refer to the Assembly Diagram of this manual. Unwrap and separate all parts in a clean work area.

SAVE THESE INSTRUCTIONS

USE PRECAUTIONS

TO PREVENT SERIOUS INJURY AND DEATH FROM TIPPING:

1. This product is not a toy. Do not allow children to play with or near this item.

2. Do not exceed weight capacities, before moving.

3. Use only on a flat, hard and smooth surface capable of safely supporting a fully loaded DVD Storage.

4. Use as intended only. Inspect before every use; do not use if parts are loose or damaged.

TECHNICAL SPECIFICATIONS

Model	DX0202-C250421S-01-Black	DX0202-C250421S-02-Brown
Color	Black	Brown
Product Dimensions (LxWxH)(mm)	1420*220*1300	
Net Weight(kg)	About 28	

*Products such as specifications, appearance, and design are subject to modification without prior notice.

Installation of Cams and Pins

Screw the pin into the hole. To set the cams correctly, ensure that the arrow on the cam is opening to the hole of the pin it is locking. Lock the cam by turning the cam head with a screwdriver until it is tightened. Please do not use an electric screwdriver to assemble the unit.

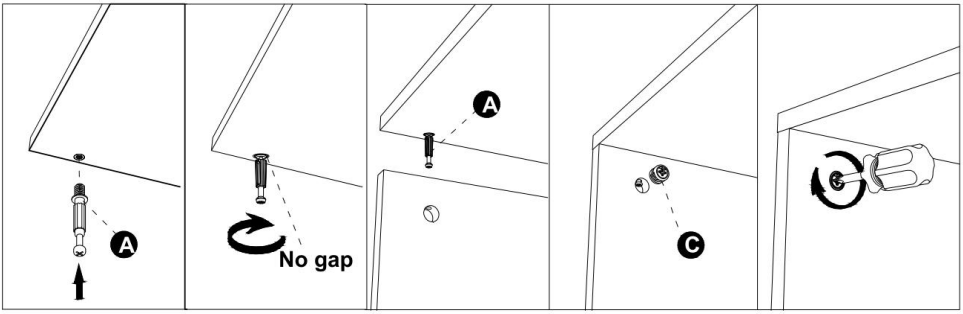

Read each step carefully before starting. It is very important that each step of instruction is performed in the correct order. If these steps are not followed in sequence, assembly difficulties will occur.

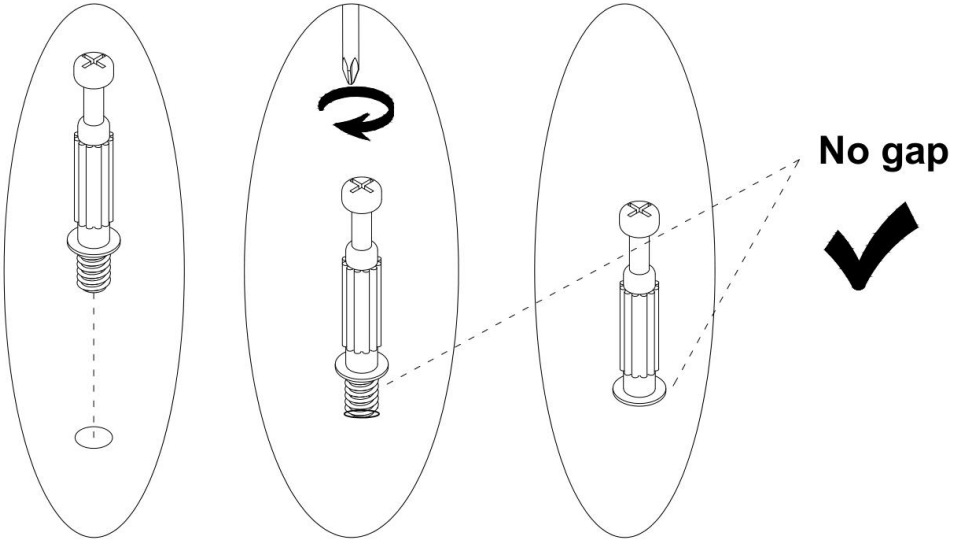
No gap

PACKAGE CONTENTS

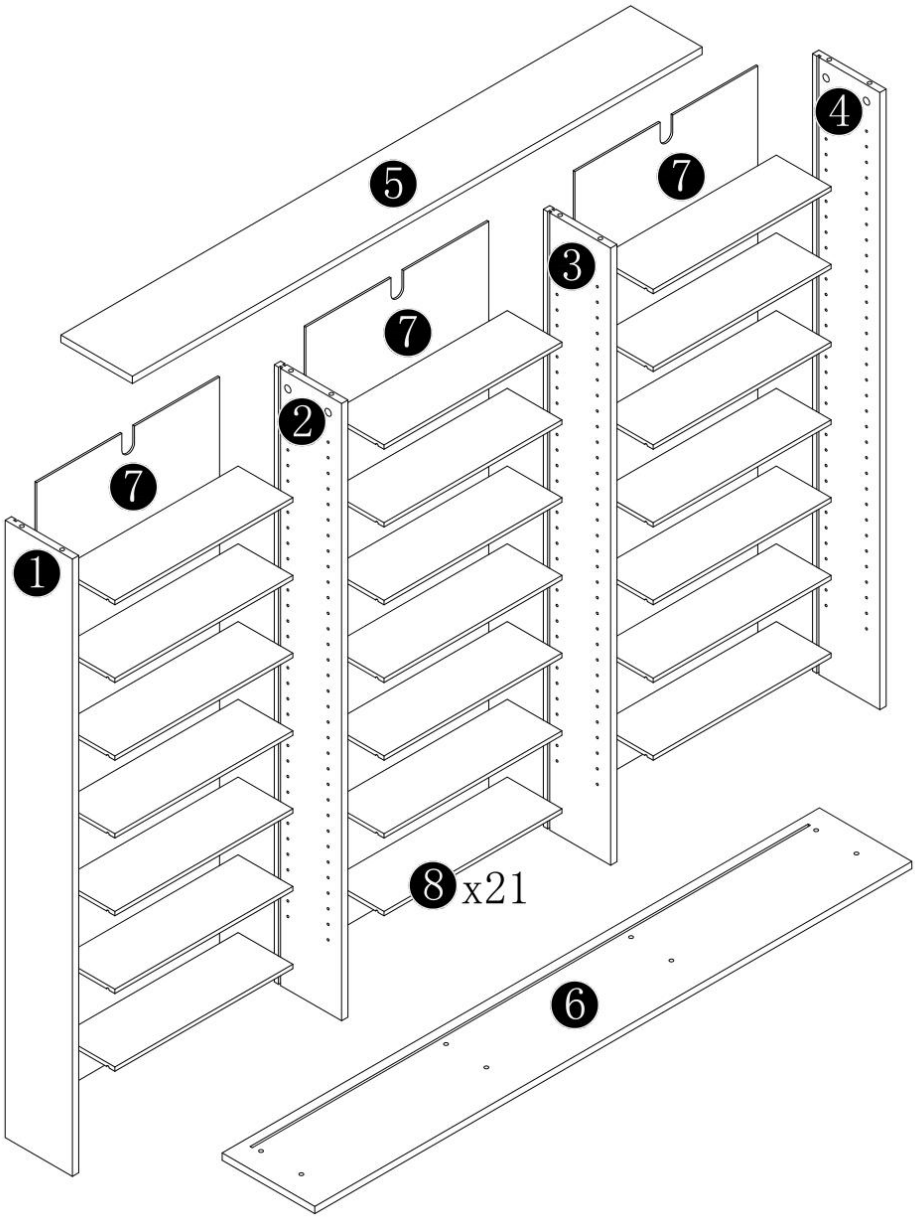

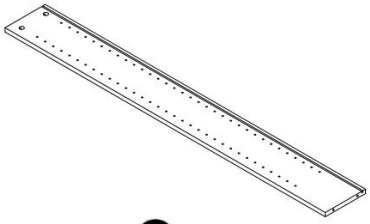

❶ 1pc

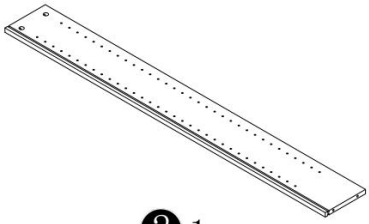

❷ 1pc

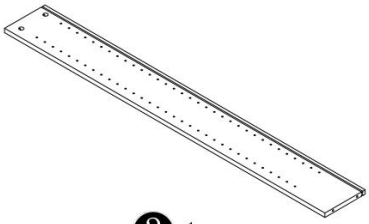

❸ 1pc

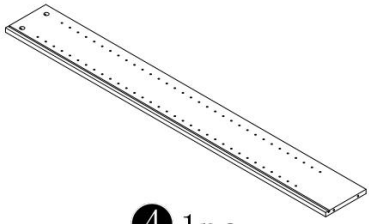

❹ 1pc

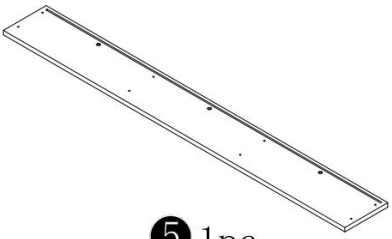

❺ 1pc

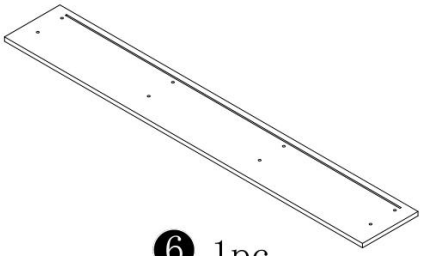

❻ 1pc

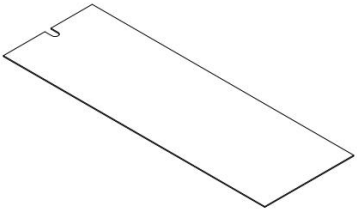

❼ 3pcs



❽ 21pcs

 A 8pcs	 M7x50MM B 8pcs	 C 8pcs	 M6x30MM D 8pcs
 M 1pc	 ST3.5x12MM P 18pcs	 R 84pcs	 U 18pcs
 18CM Z 3pcs	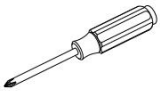		

ASSEMBLY STEPS

1

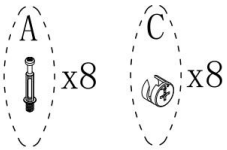

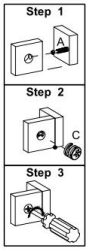

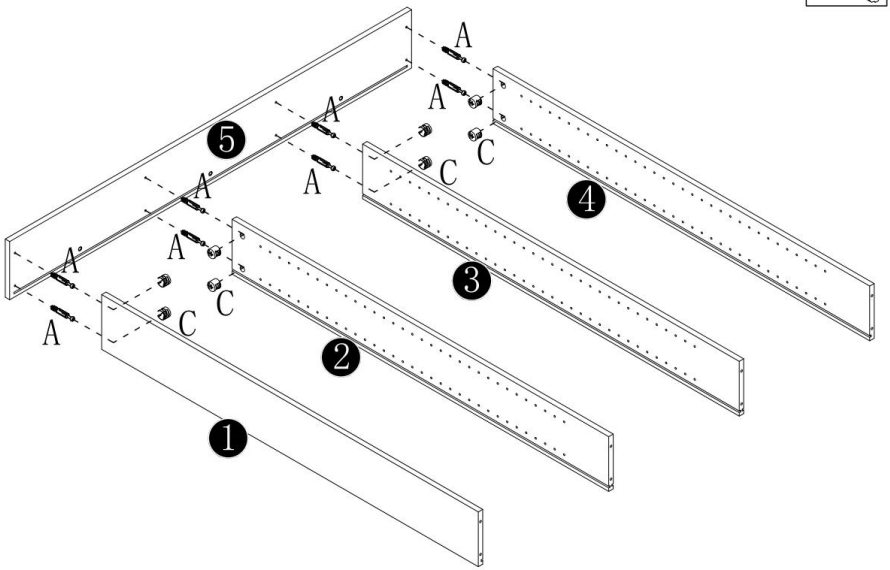

2

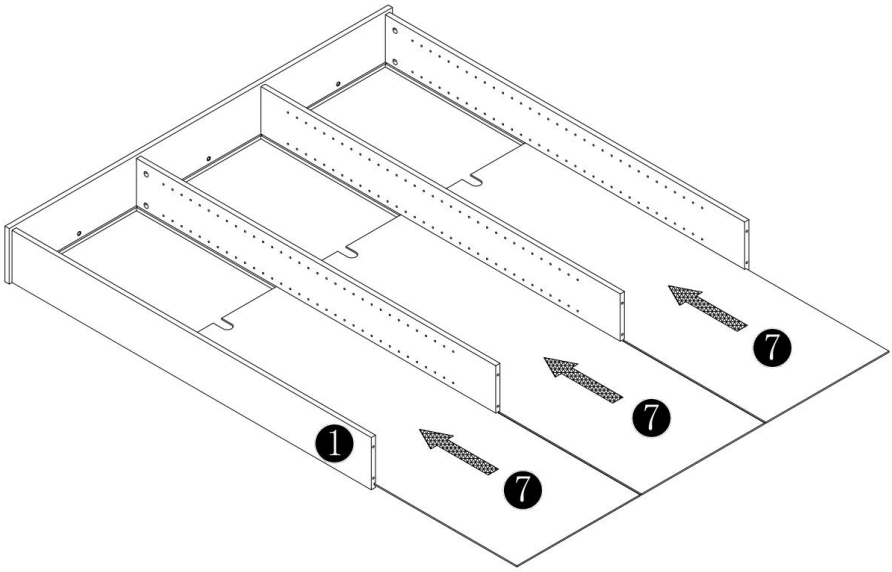

3

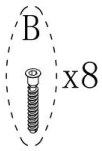

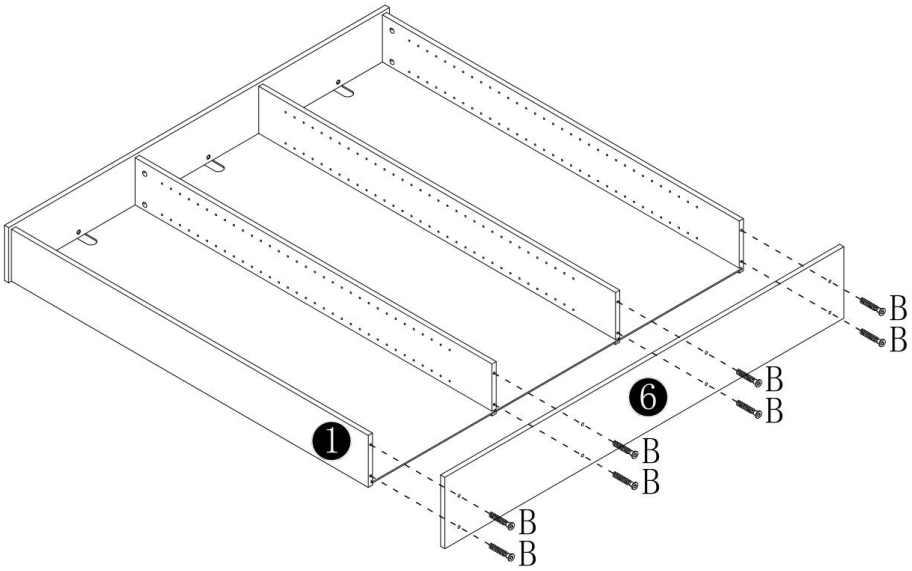

4

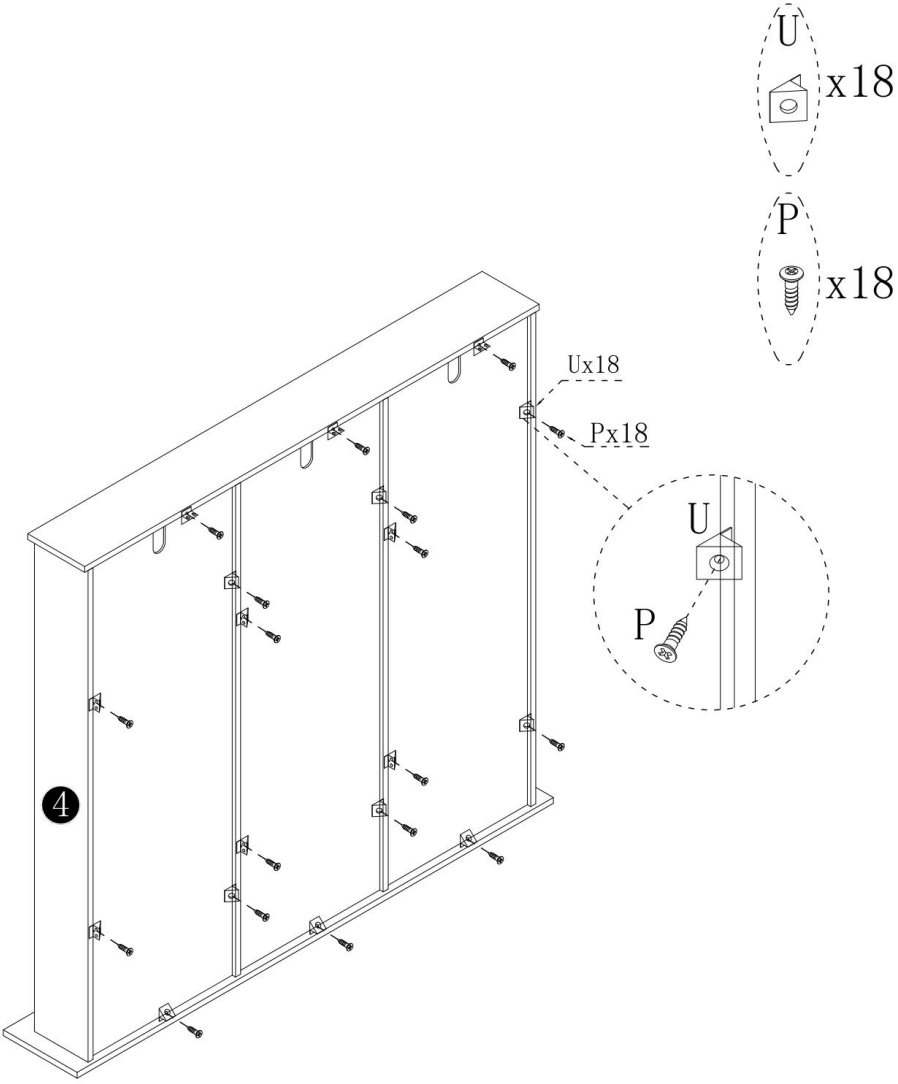

5

WARNING



Children have died from furniture tipover.
To reduce the risk of furniture tipover:

-ALWAYS install Anti-tip device provided
-NEVER climb, stand, or sit on the unit. lt is not designed to support human weight
-DO NOT overload shelves, tops, or bases.Place heaviest items in the lowest cubes.
-DO NOT stack multiple units. Each must be anchored individually.



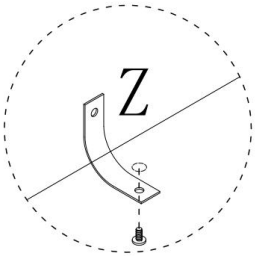

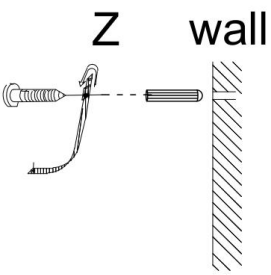

6

Adjust the height according to the requirements

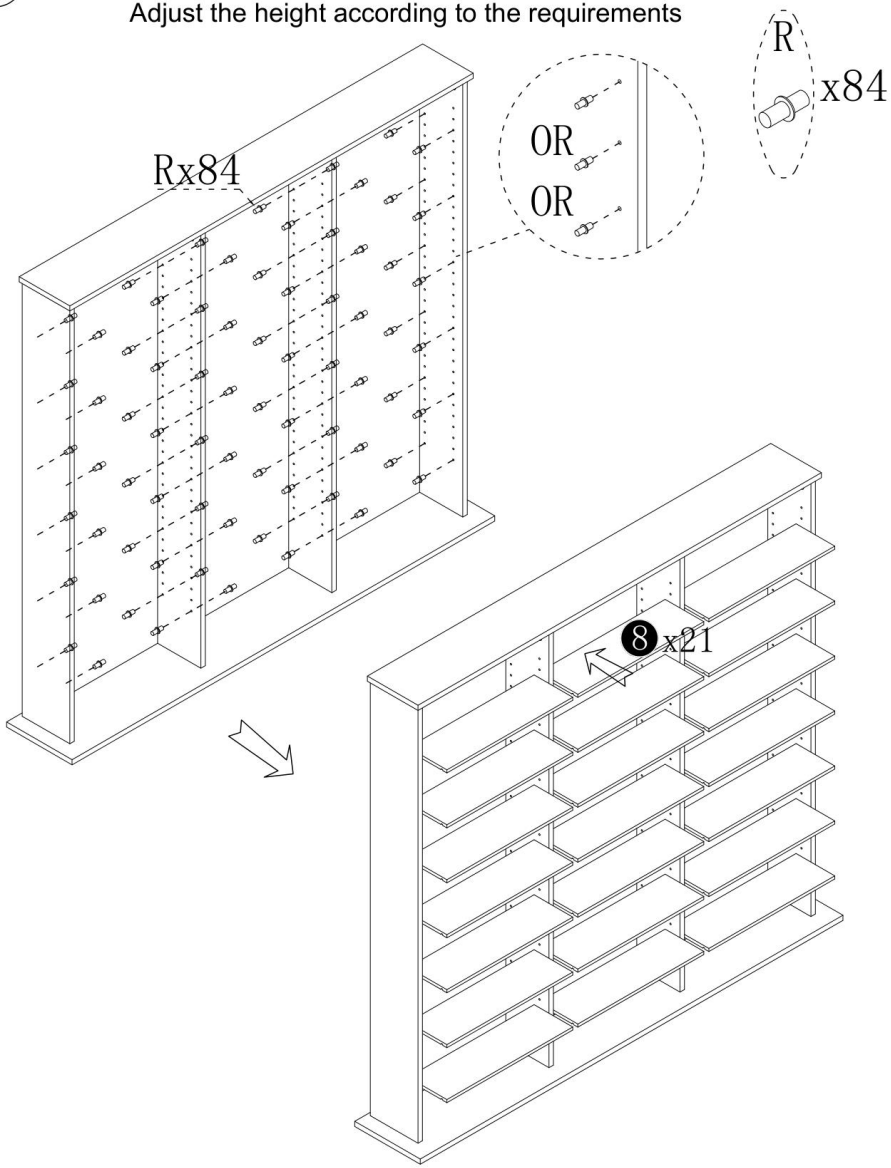

7

Write the product classification on M number, and affix it to the 8th layer board as a product categorization label for classification and identification

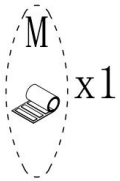

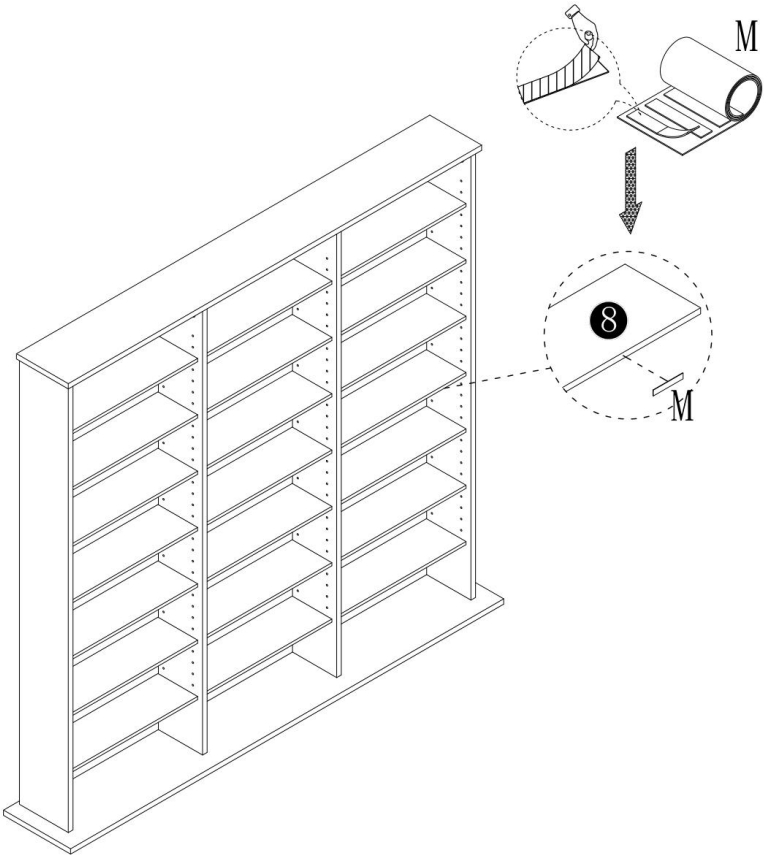

Manufacturer: Guangzhou Dingxin Office Furniture Co., LTD
Address: No. 1700, Renhe Road, Aotou Town, Conghua District, Guangzhou
E-mail: support@vevor.com

