ASSEMBLY GUİDE

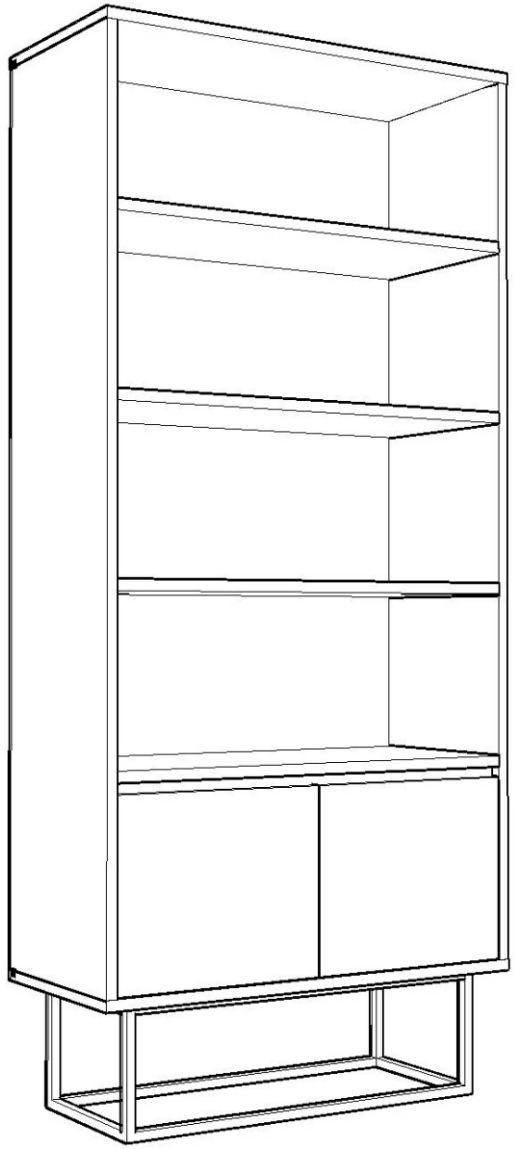

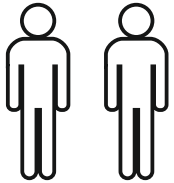

This unit should be assembled by two persons.

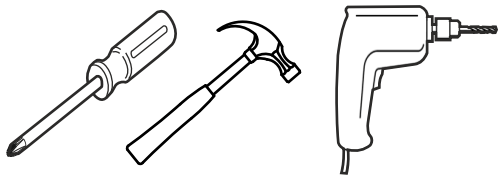

The necessary tools (not included)

ACCESSORY LIST

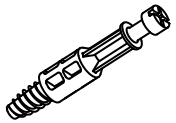		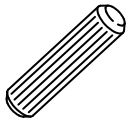	
(MİNİFİX SHAFT) X 24	(MİNİFİX BODY) X 24	(DOWEL) X 24	(PEG) X 24
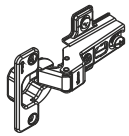	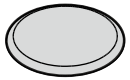		
(CAMEL HİNGE) X 4	(FOOT SEAL) x 4	(SETSKUR SCREW) x 8	(SCREW) x 8
			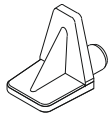
(3,5X18 SCREW) x 32	(CORNER WEDGE) x 10	(ALYAN KEY) x 1	(PİLASTİC PİN) x4

* FİX THE ACCESORİES AS SHOWN FOLLOW THE İNSTALLATİON SEQUENCE WHİLE İNSTALLİNG THE PRODUCT.

ATTENTION !!

Minifix and Dowel is the main connection material used in products.
Before starting assembly, please check the drawings below...

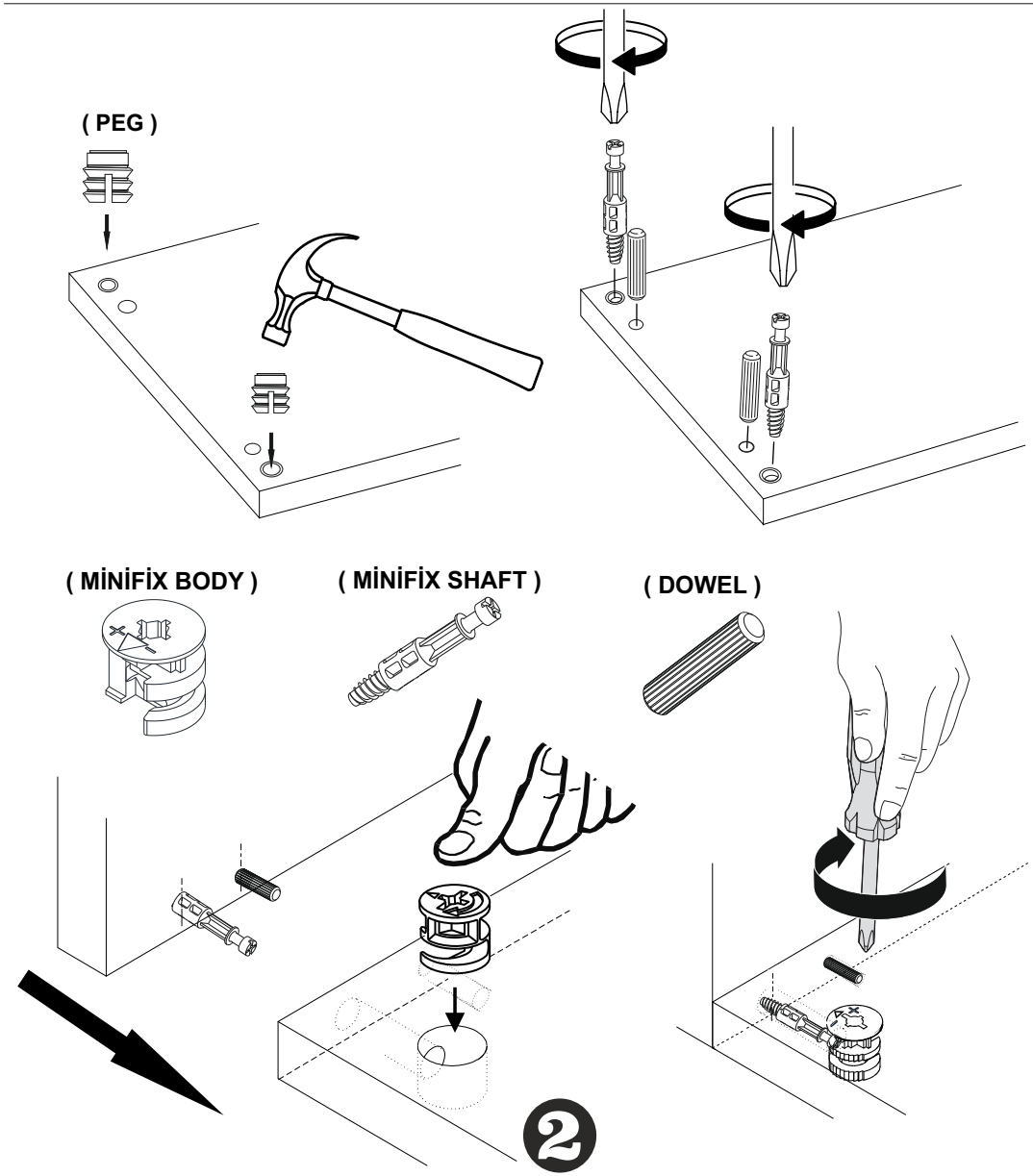

GENERAL VIEW

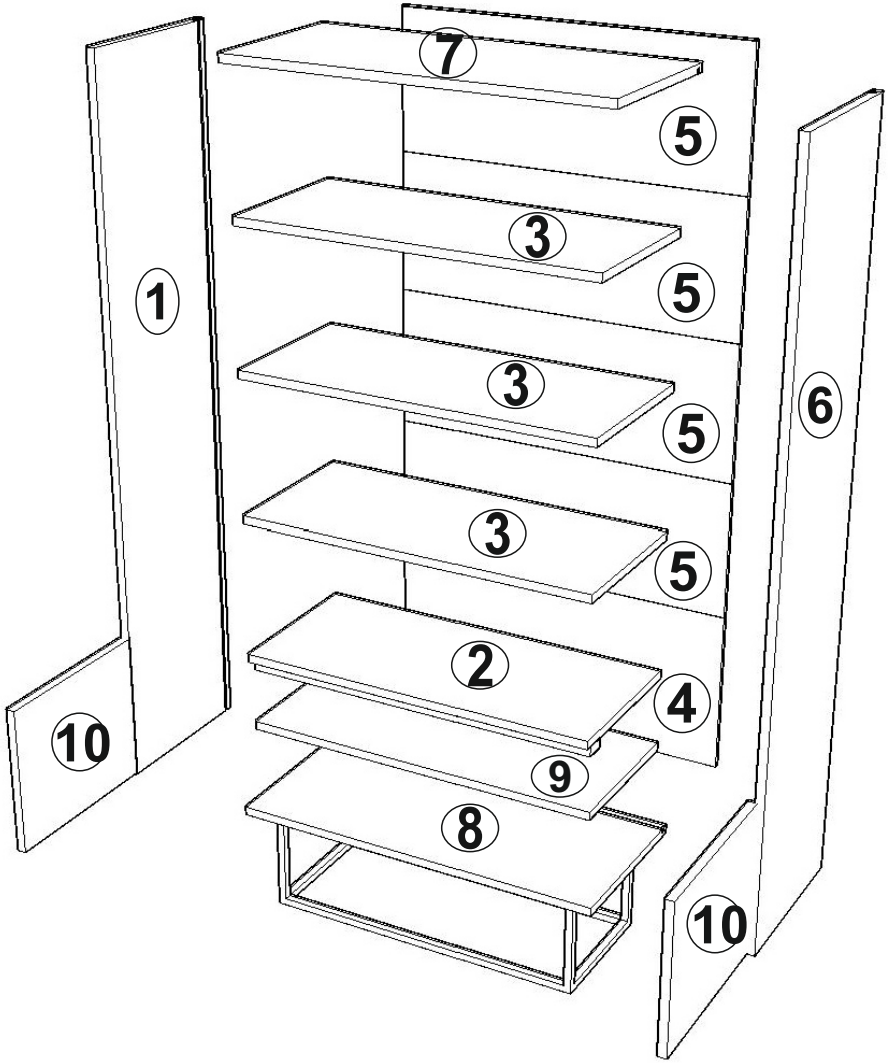

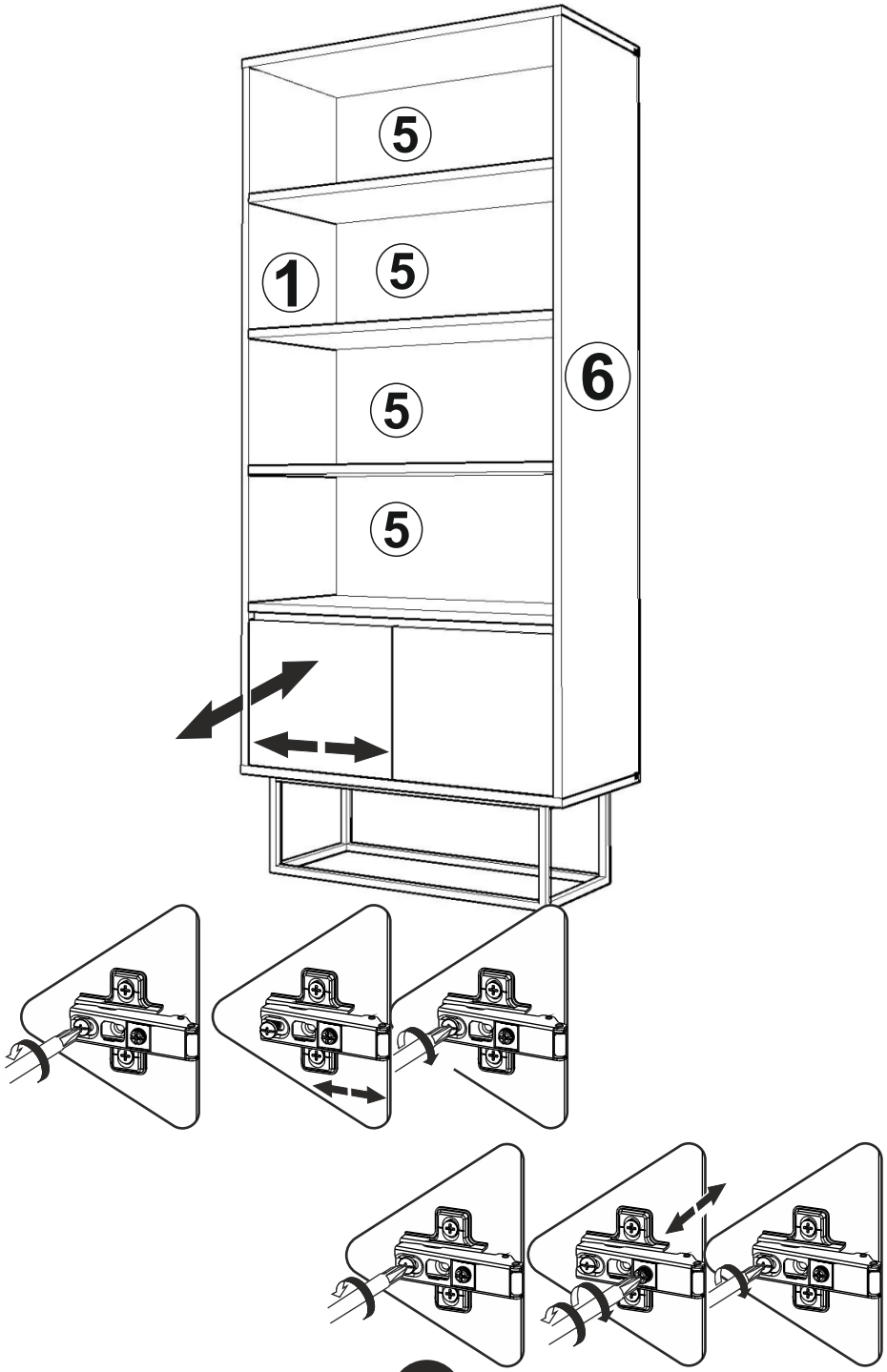

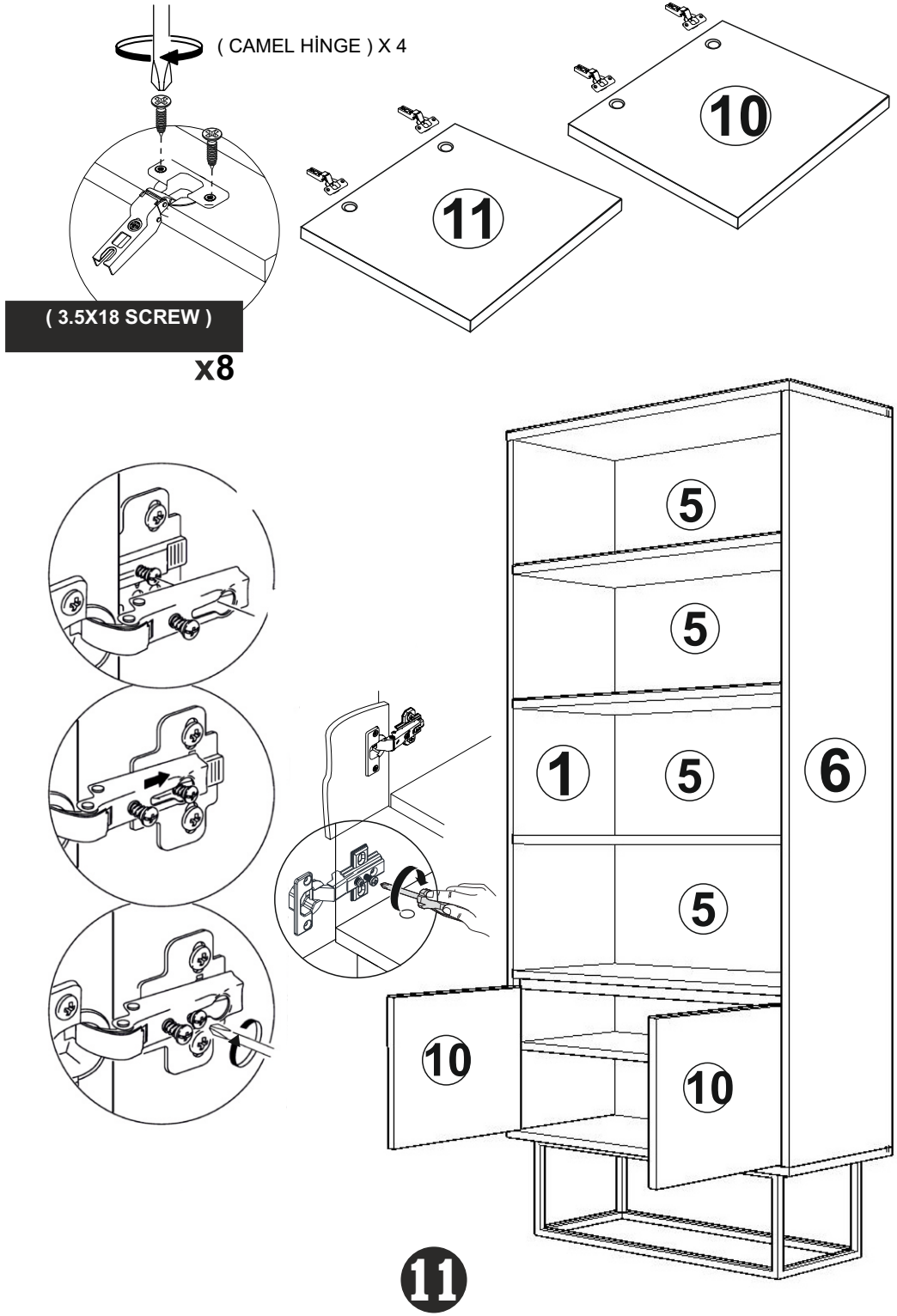
(CAMEL HİNGE) X 4
10
11
(3.5X18 SCREW)
x8
5
5
1
5
6
5
10
10
11

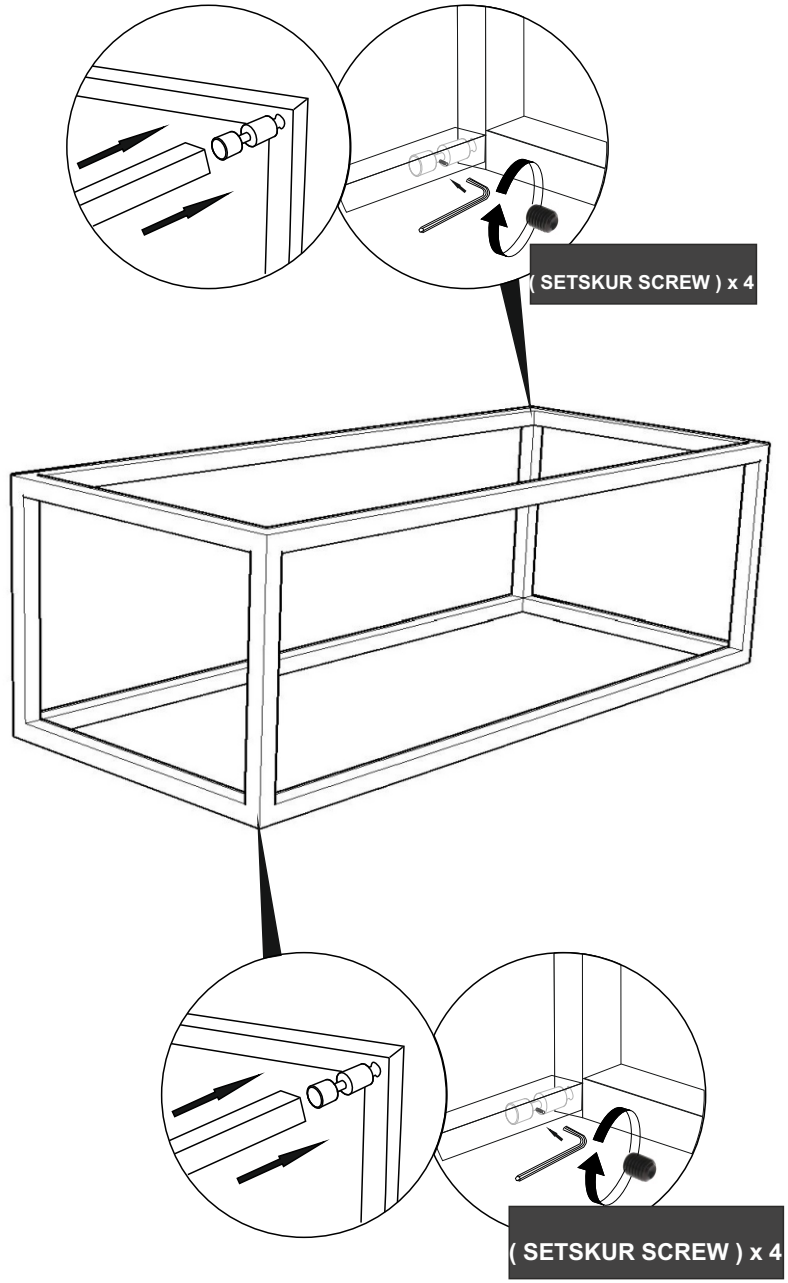
(SETSKUR SCREW) x 4
(SETSKUR SCREW) x 4
4

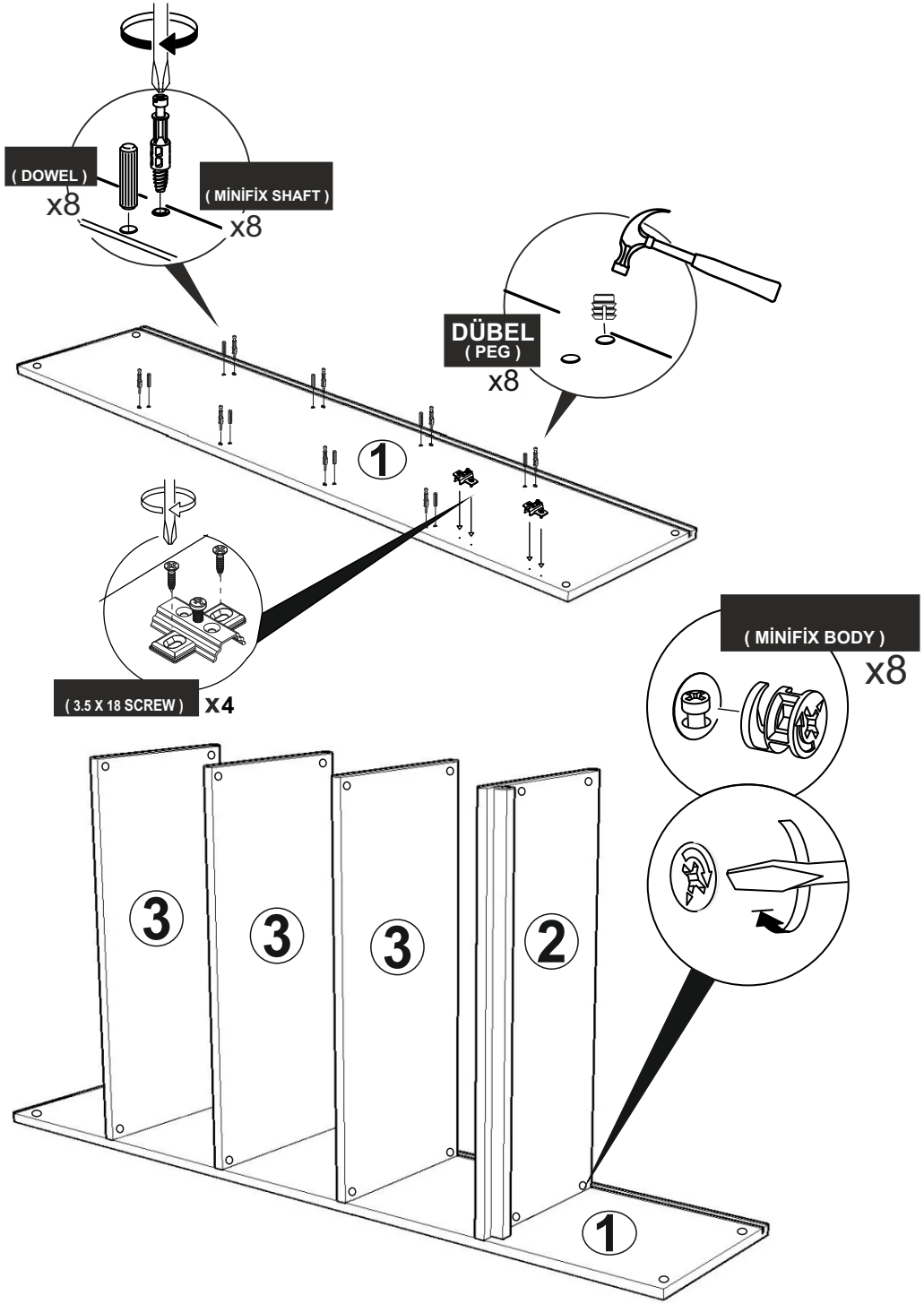
(DOWEL)
x8
(MİNİFİX SHAFT)
x8
DÜBEL
(PEG)
x8
1
(3.5 X 18 SCREW)
x4
(MİNİFİX BODY)
x8
3
3
3
2
1

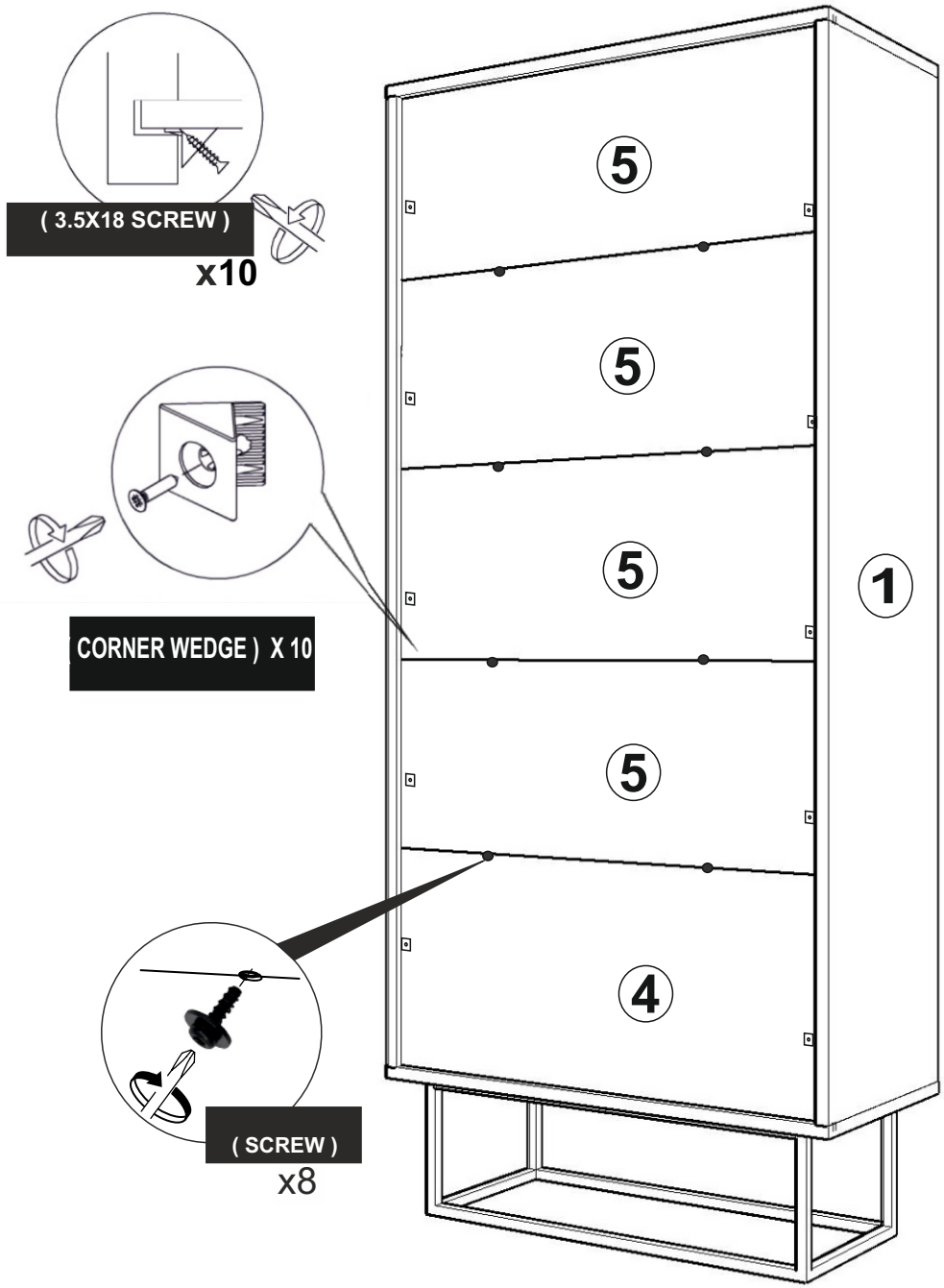
(3.5X18 SCREW)
x10
CORNER WEDGE) X 10
(SCREW)
x8
5
5
5
5
4
1

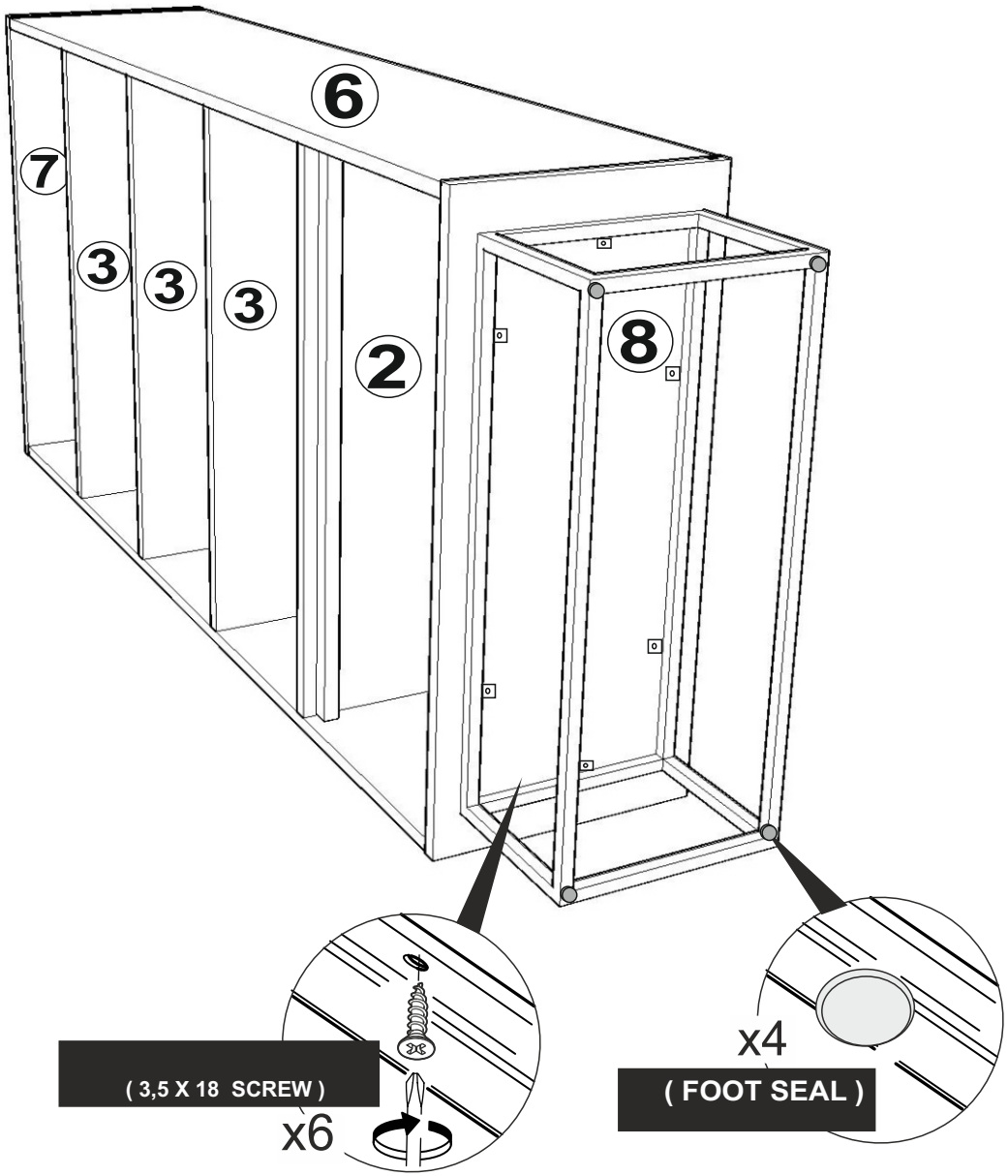
6
7
3
3
3
2
8
(3,5 X 18 SCREW)
x6
x4
(FOOT SEAL)

9

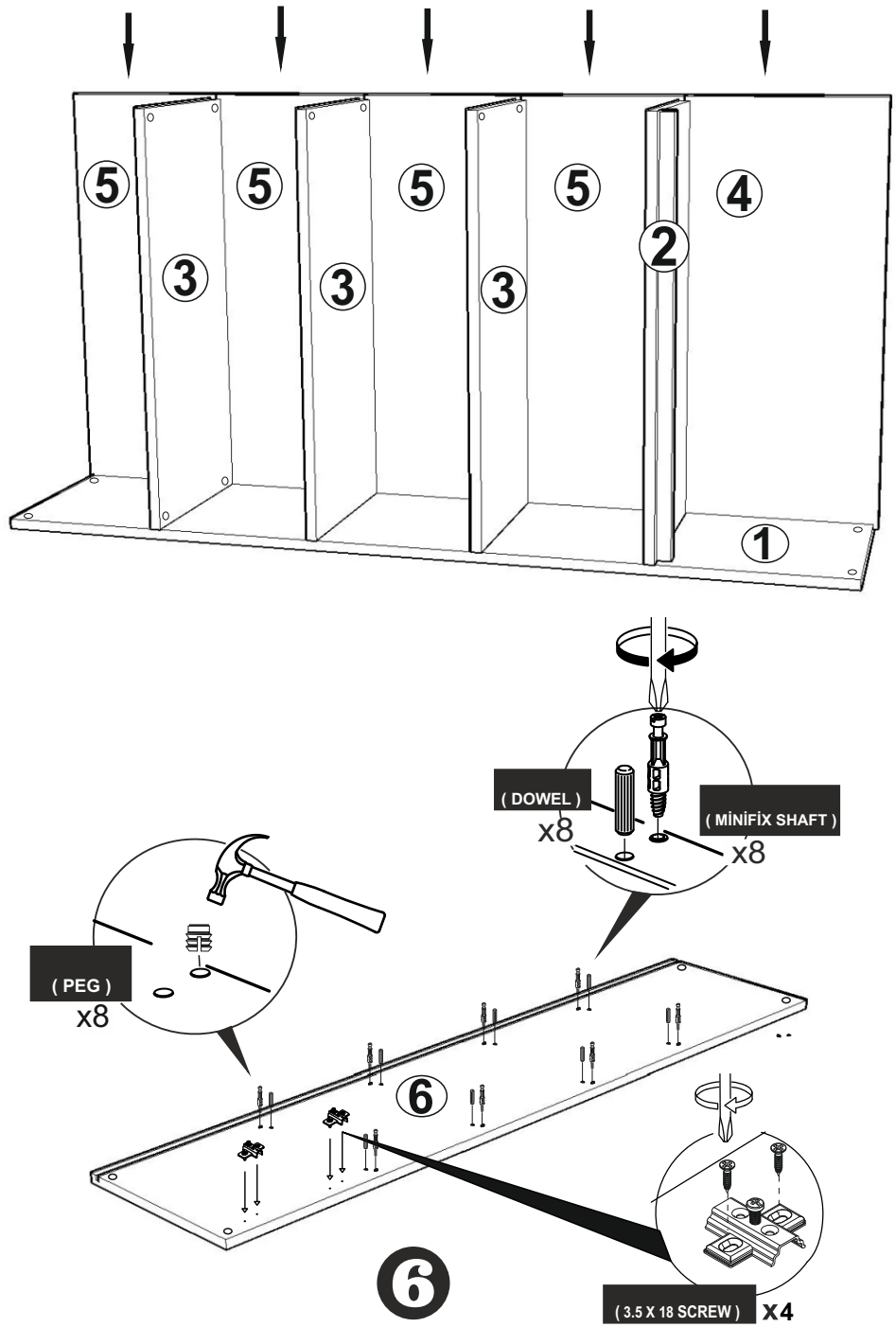
5
5
5
5
4
3
3
3
2
1
(DOWEL)
x8
(MİNİFİX SHAFT)
x8
(PEG)
x8
6
(3.5 X 18 SCREW)
x4

6

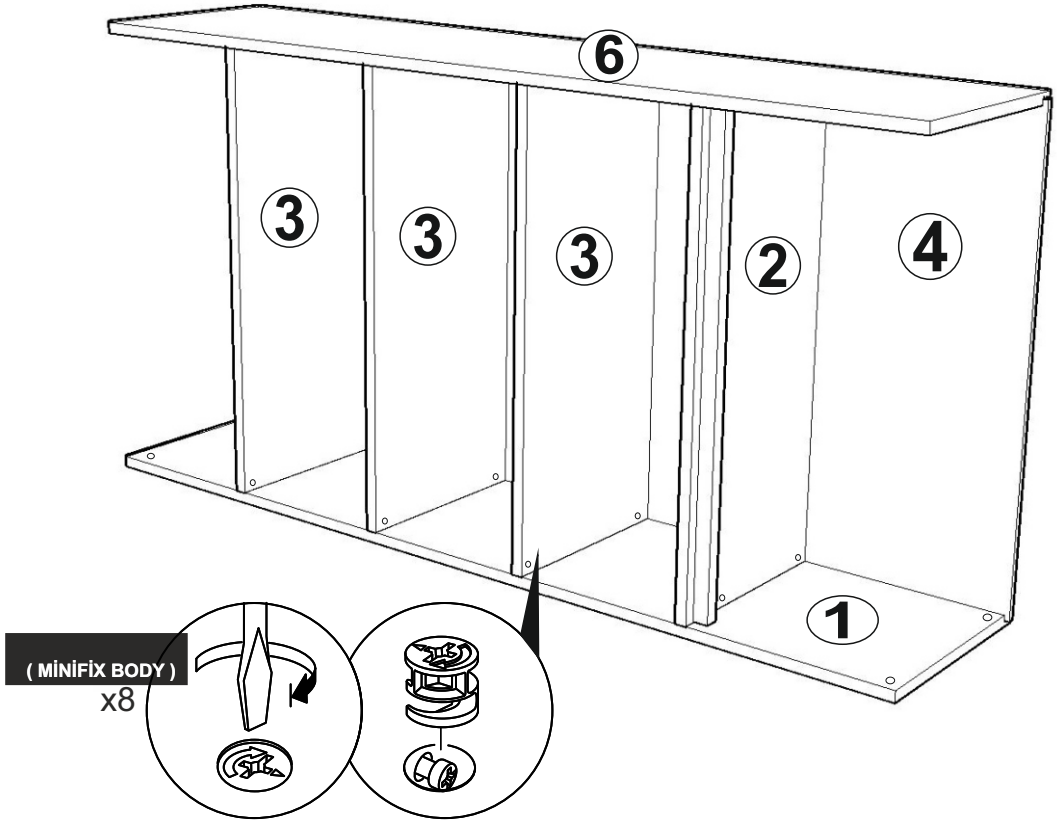
6
3
3
3
2
4
1
(MİNİFİX BODY)
x8

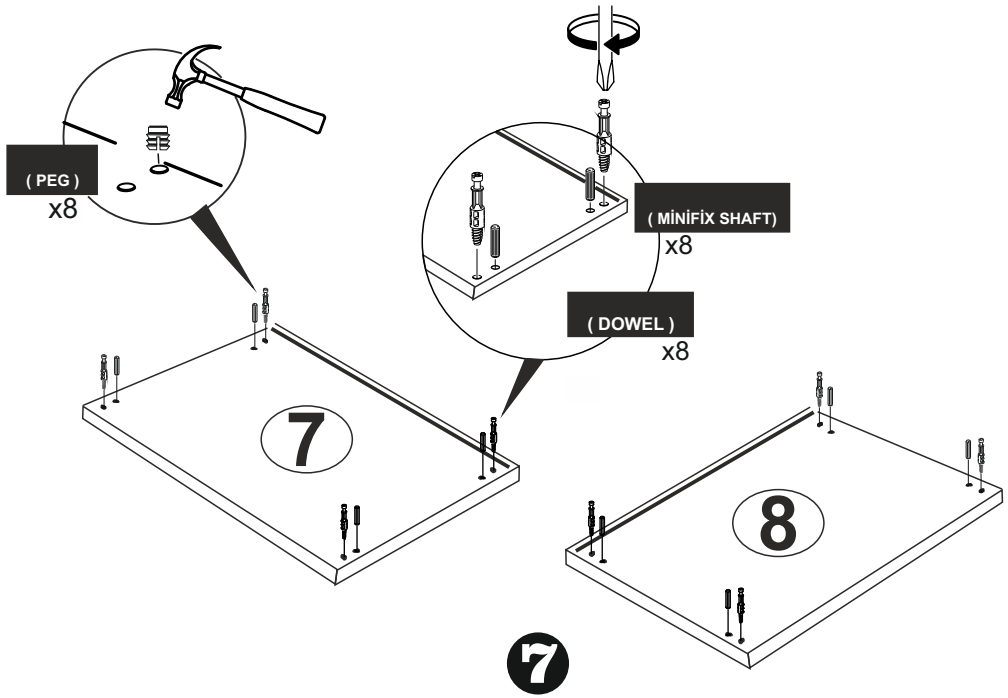
(PEG)
x8
(MİNİFİX SHAFT)
x8
(DOWEL)
x8
7
8

7

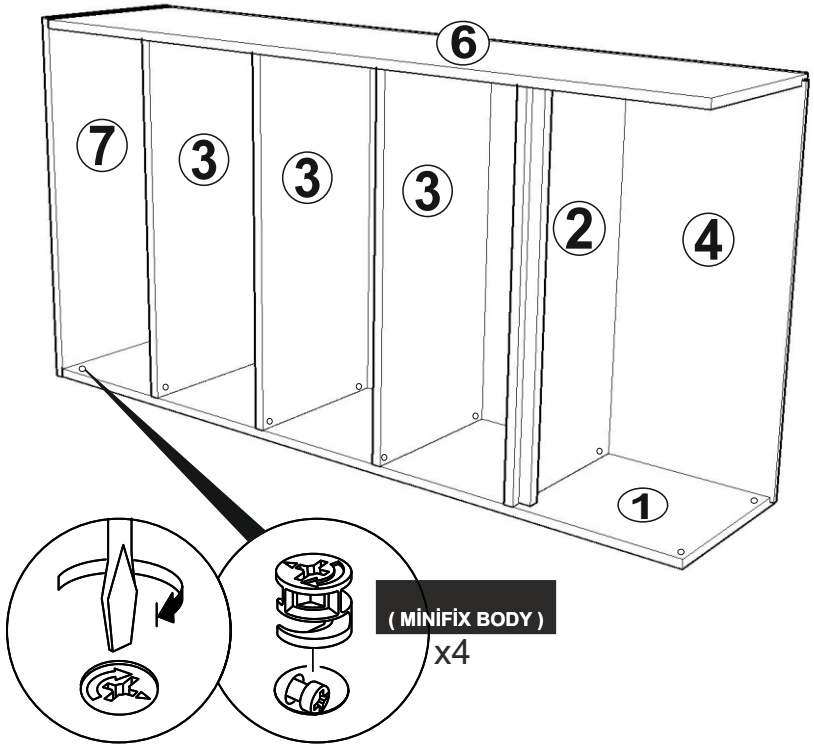
6
7
3
3
3
2
4
1
(MİNİFİX BODY)
x4

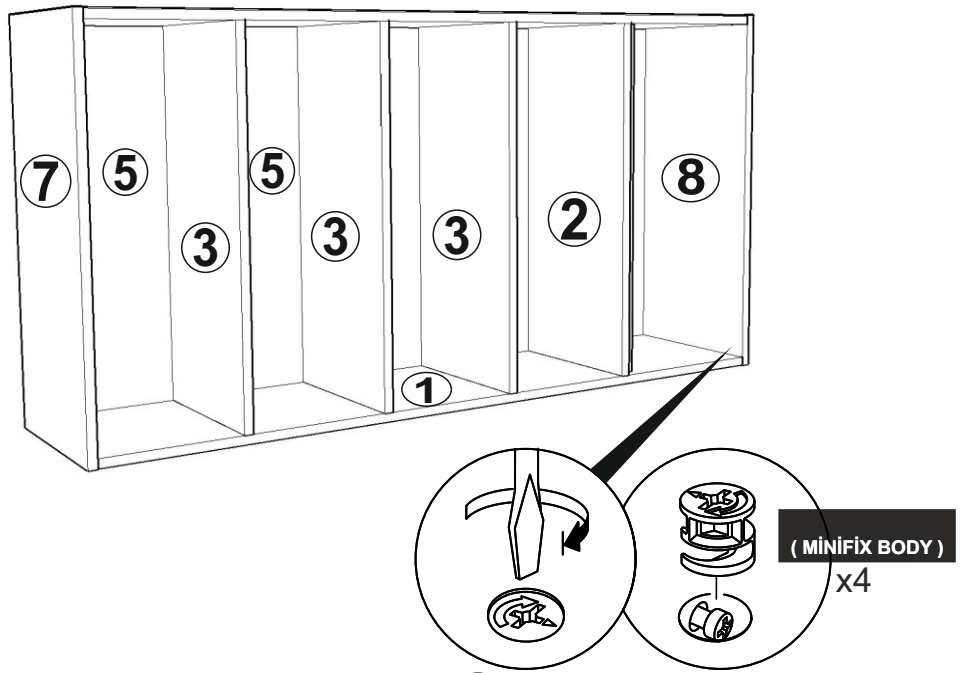
7
5
3
5
3
3
2
8
1
(MİNİFİX BODY)
x4

8