INSTALLATION
Product Manual

HYZ-GK030-01

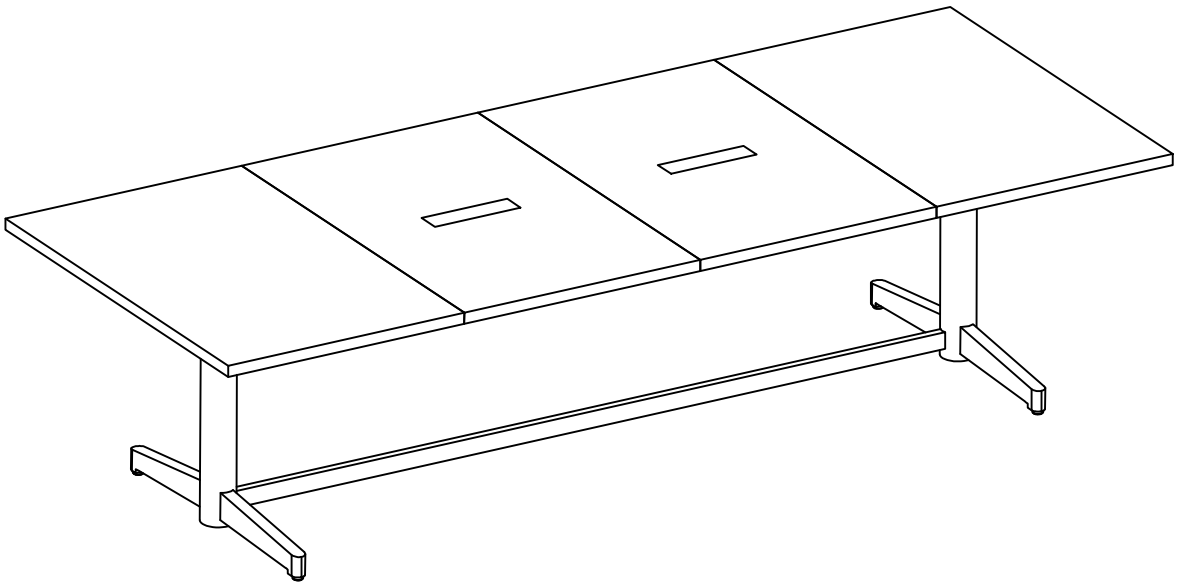

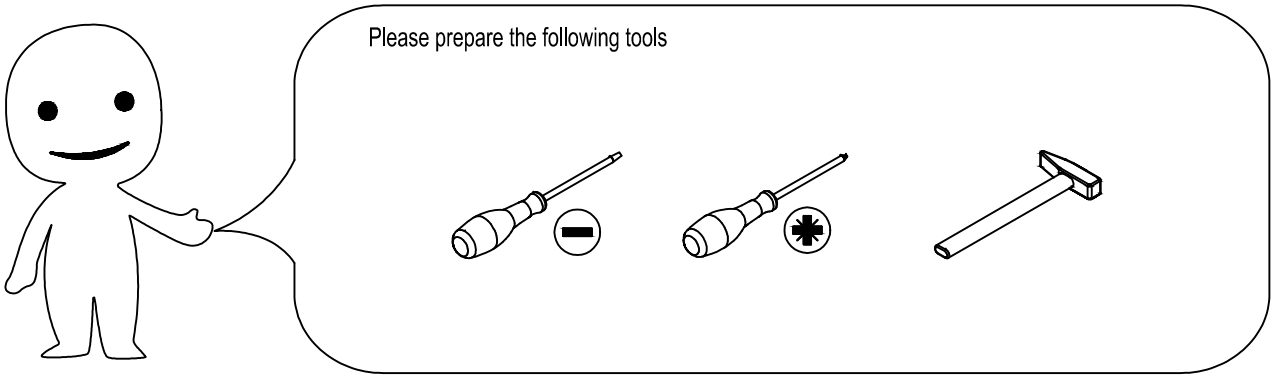

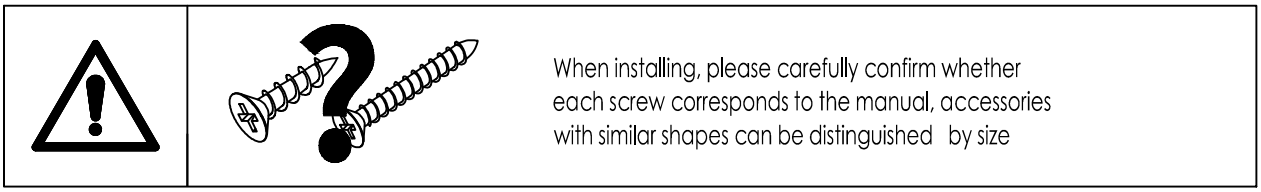

A×84	B×20	C×9	D×4
 M4×20	 M8×16		

E×6	F×1	G×2
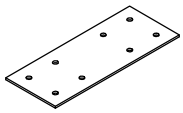		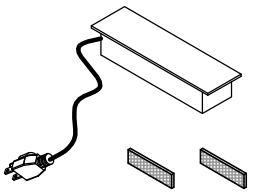 Sponge Block

Note:

Bolt installation should be carried out in two steps: initial tightening and final tightening. One-time locking is strictly prohibited. Final tightening must be performed after the overall structure is corrected and all bolts are in place.

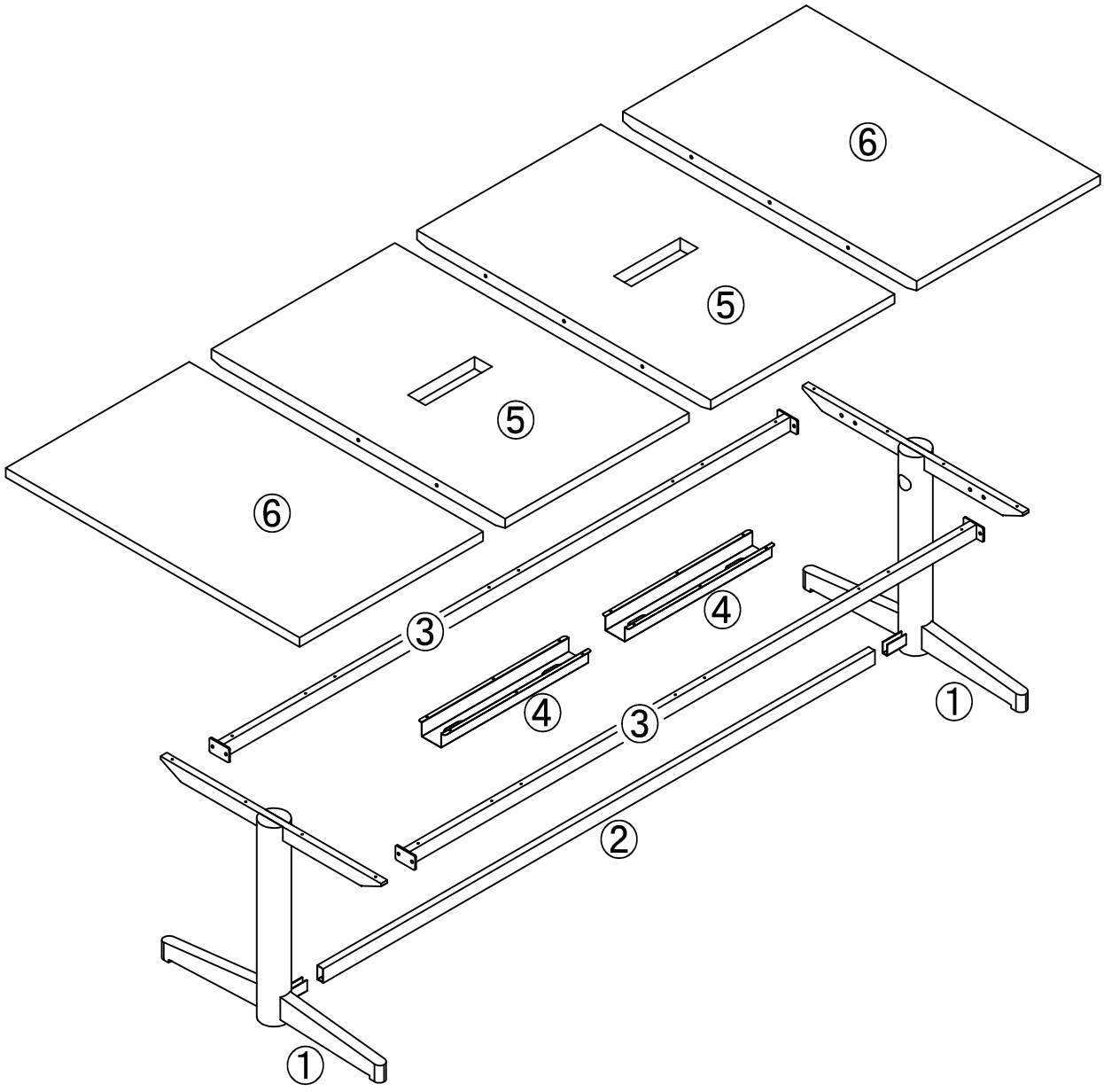
⑥
⑤
⑤
⑥
③
④
④
③
①
②
①

1

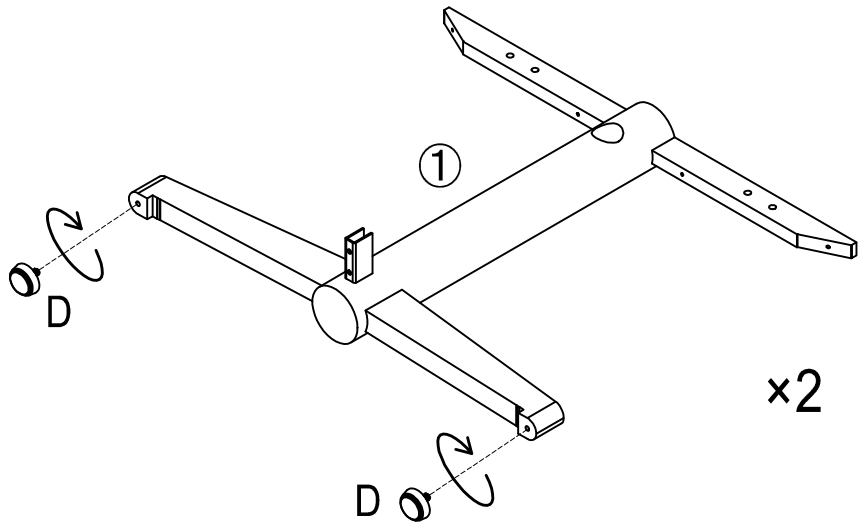

D×4

2

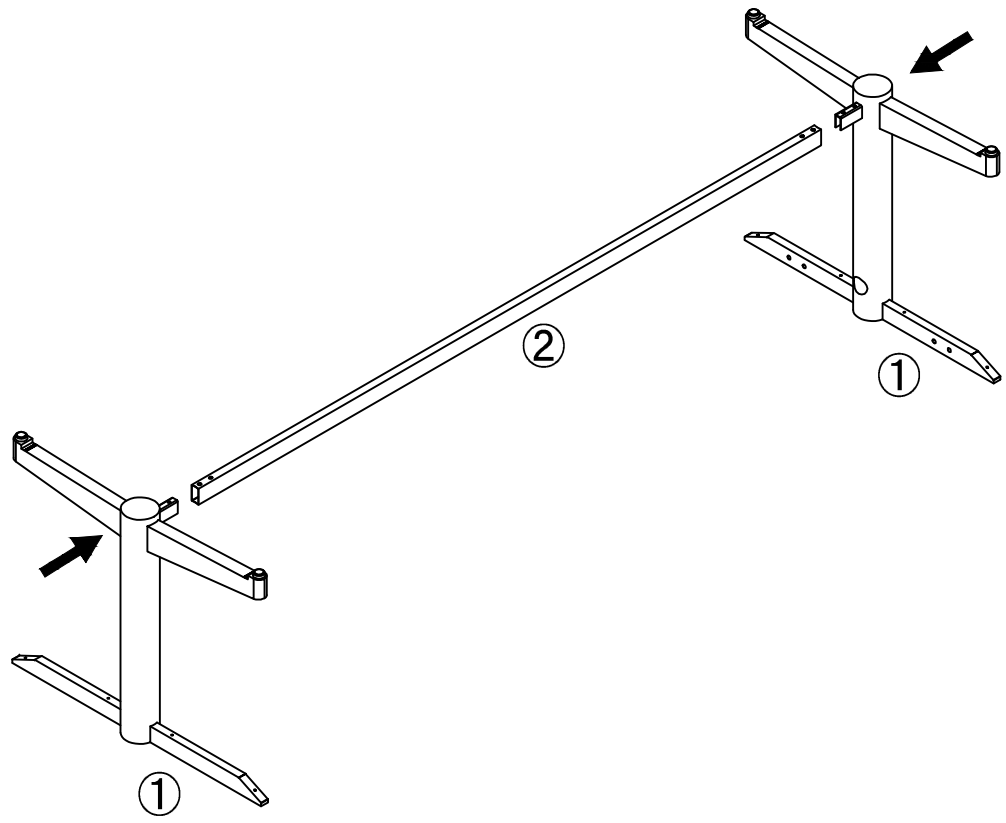

3

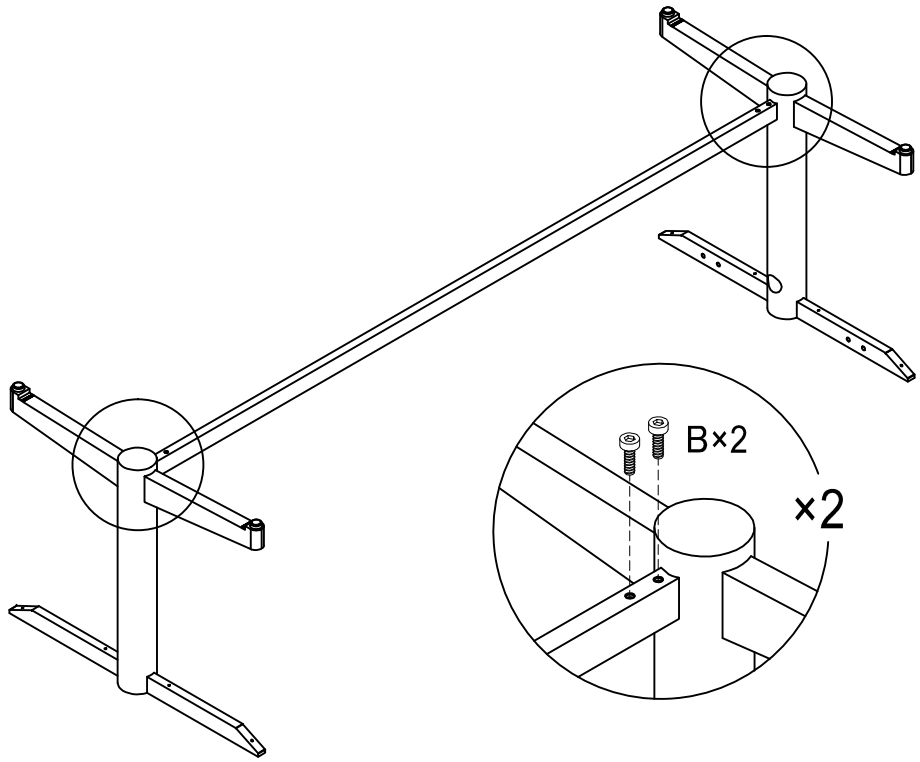

B×4

4

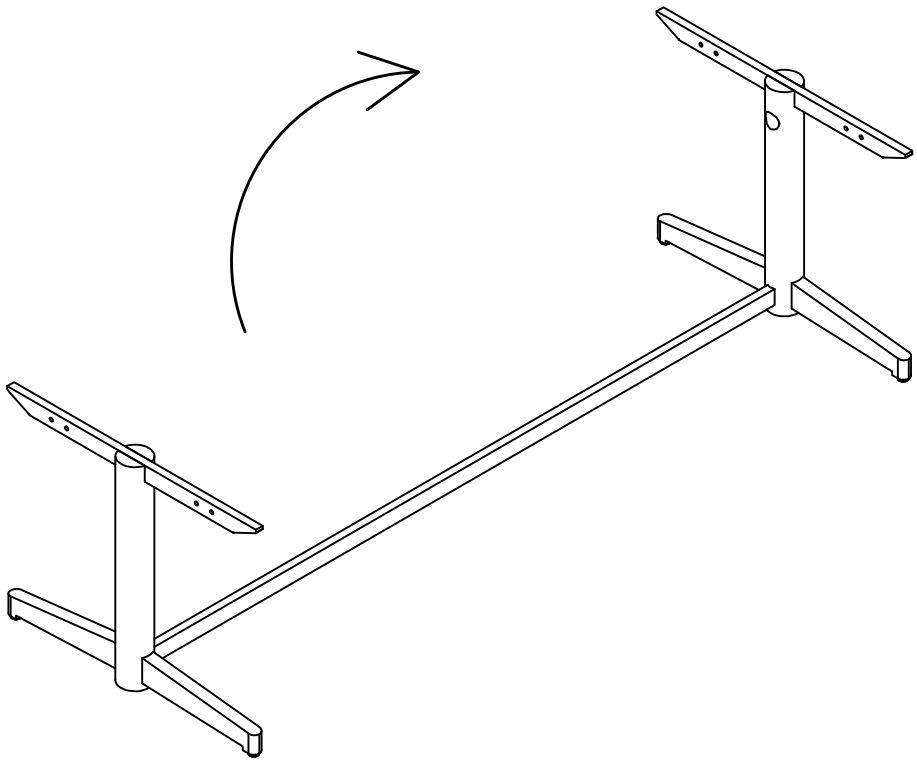

5

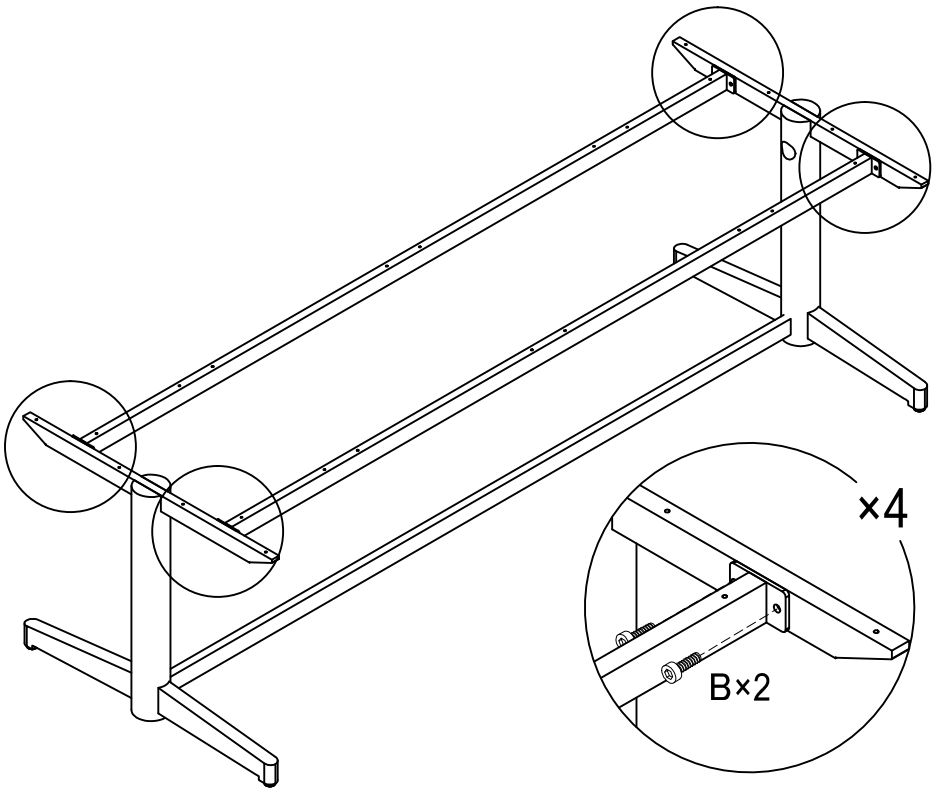

B×16

6

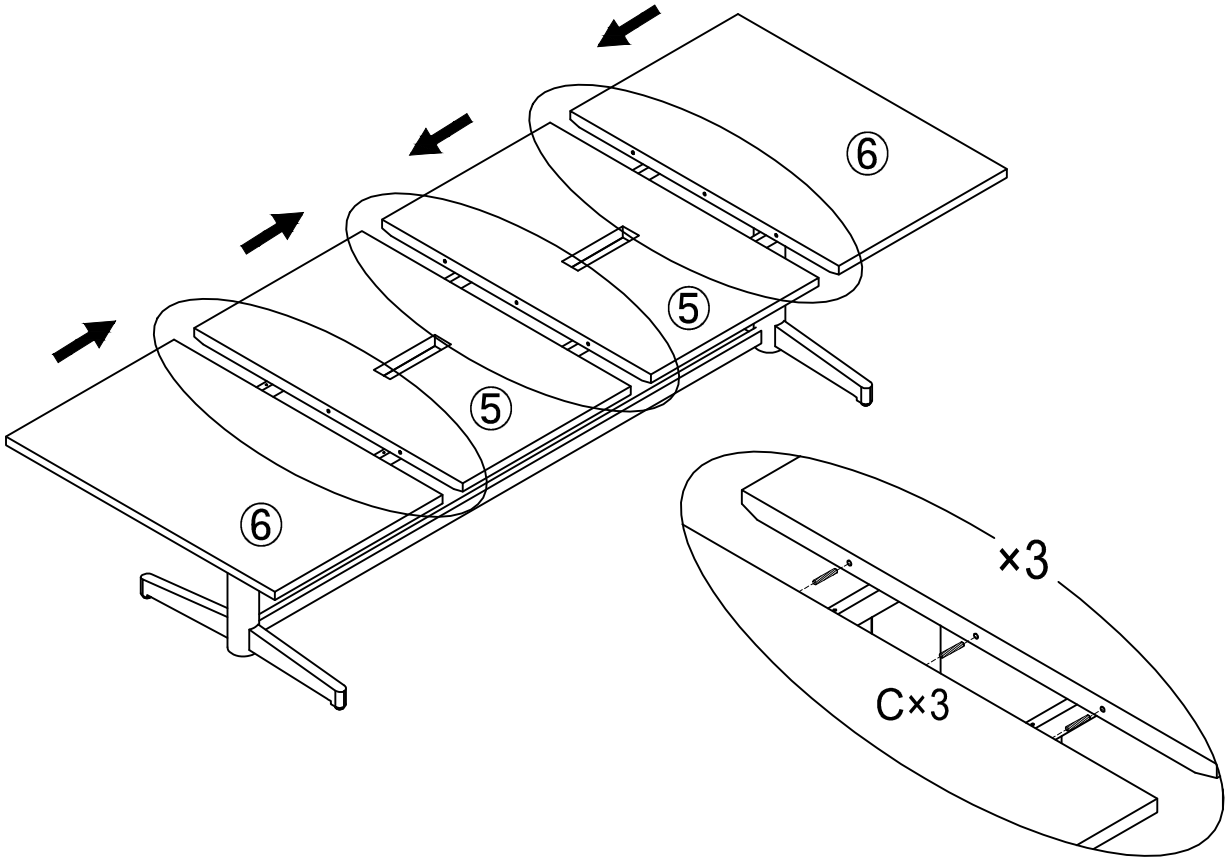

C×9

7

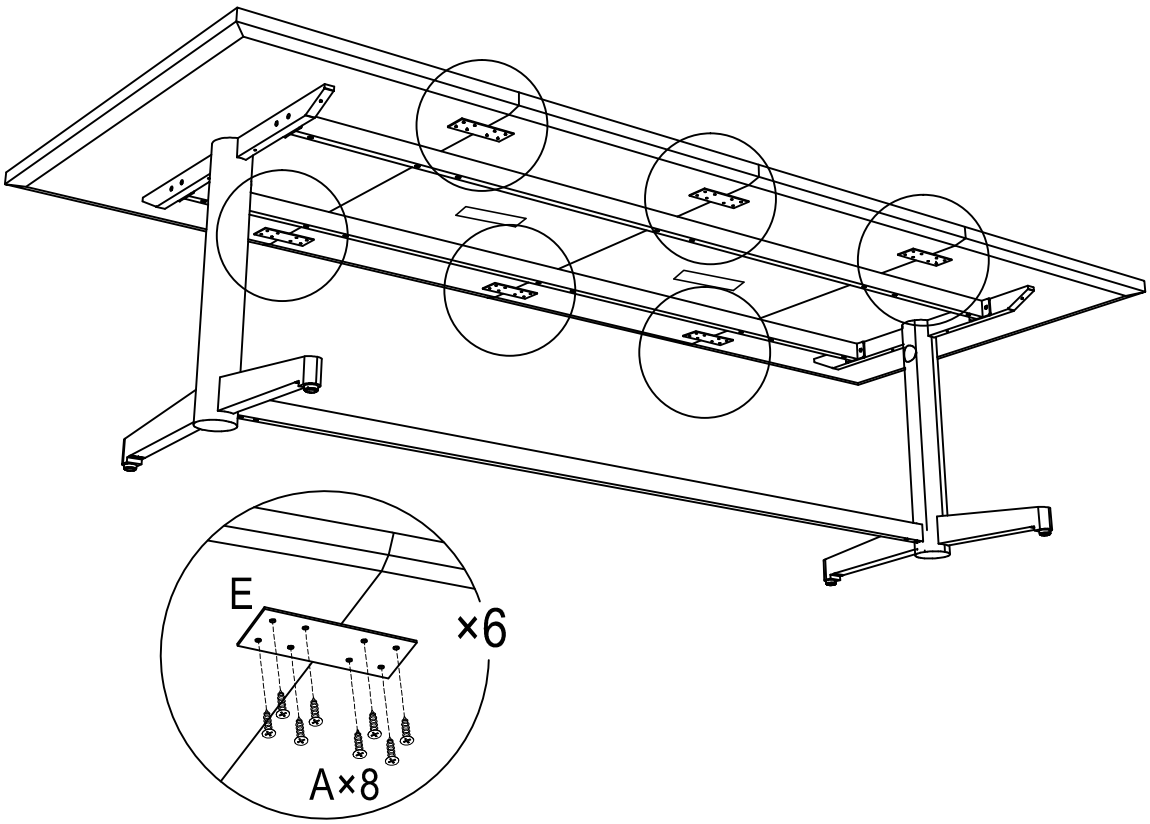

A×48	E×6

8

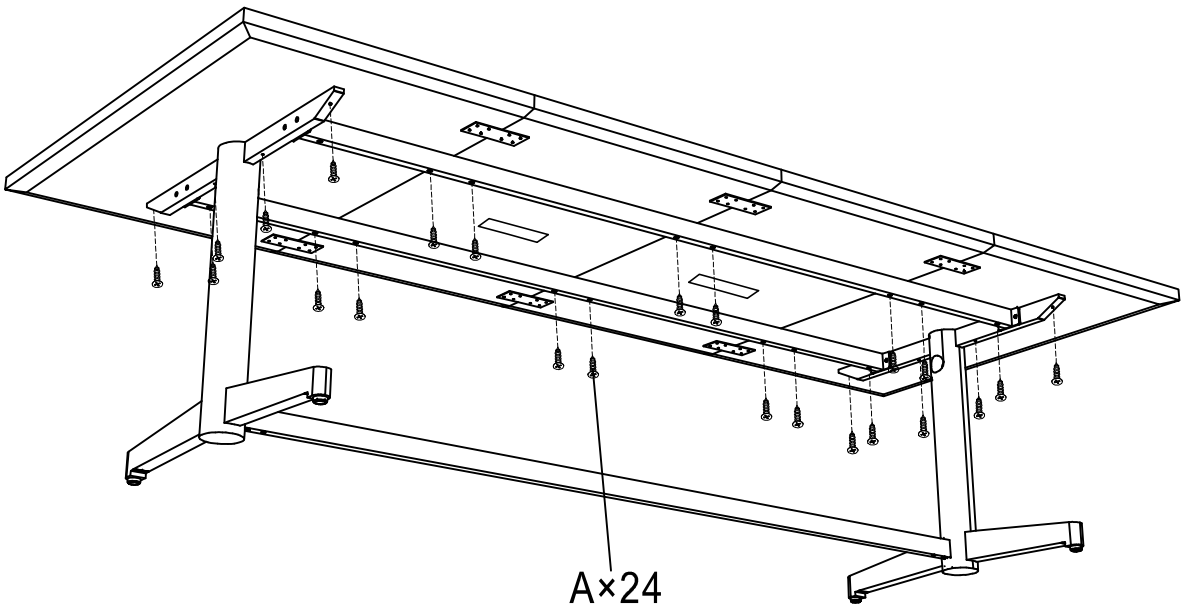

A×24

9

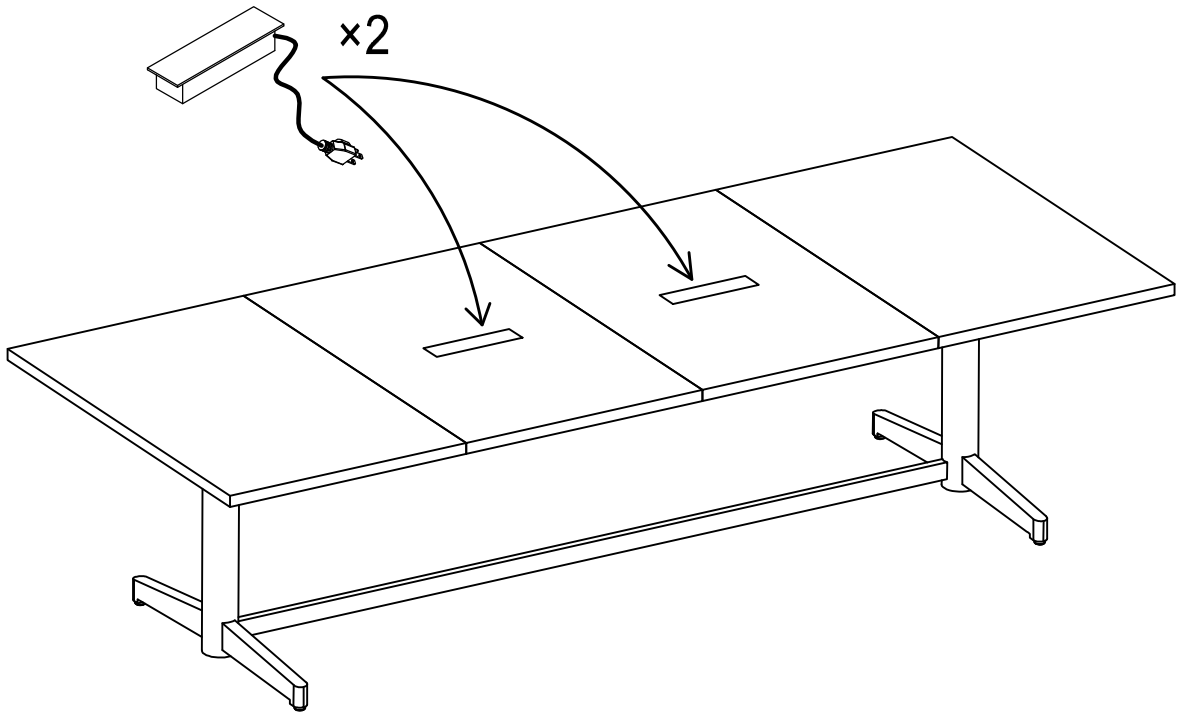

G×2

10

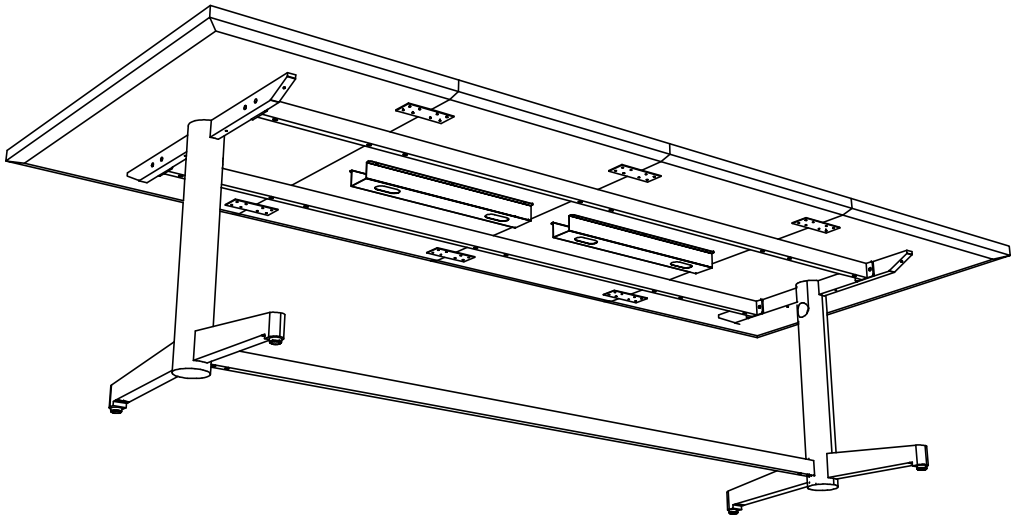

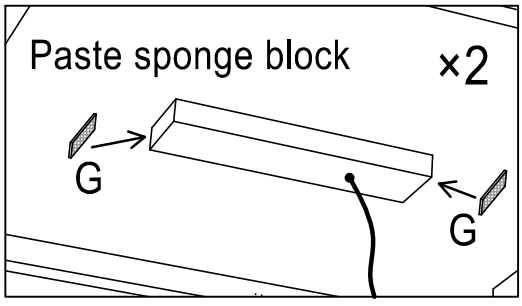

Step 1

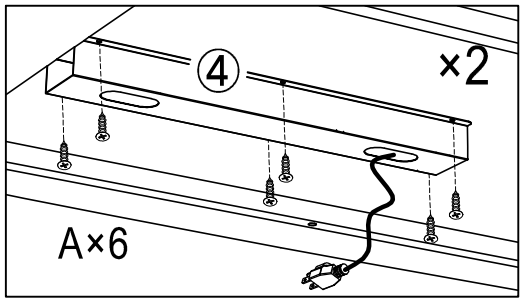

Step 2

G×4 A×12