EAST WEST
FURNITURE, LLC

SCAN ME

ASSEMBLY INSTRUCTION
VIDEO
SKU: AVT

VIEW ON SMARTPHONE



1. Open Camera app



2. Postion camera to the QR code



3. Click on the pop-up link

VIEW ON COMPUTER

CLICK HERE

ASSEMBLY INSTRUCTIONS

SKU: AVT

EAST WEST FURNITURE.LLC
175 Southbelt Industrial Dr,
Houston, TX 77047
Email:sales@eastwestfurniture.net

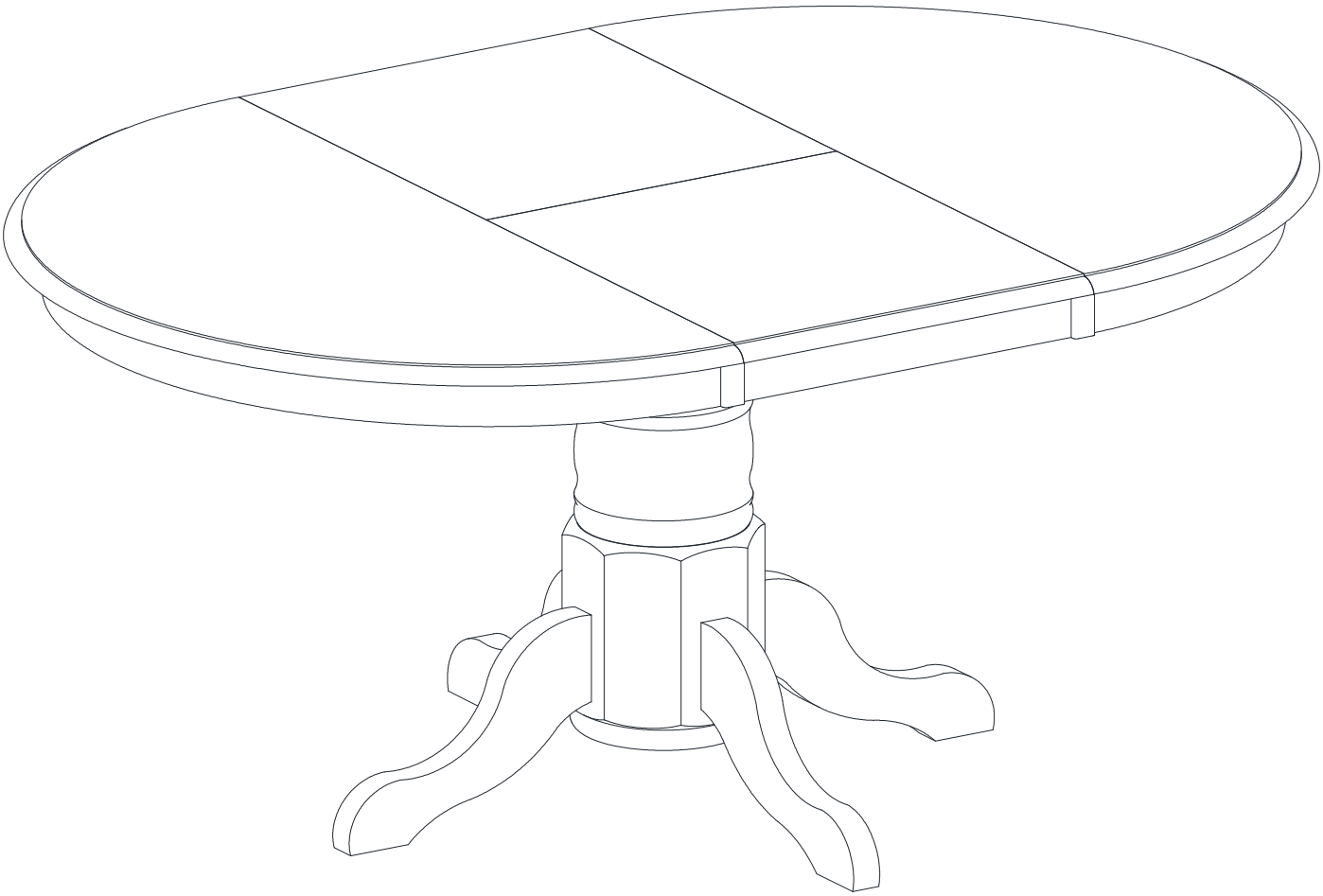

Description	: AVON TABLE TOP WITH 42''x60'' 18'' BUTTERFLY LEAF	
Product Dimension	: W.42"xD.(42"/60")xH.30"	
Cube Size (Top)	: 44.4"x44.4" x8"	NW: 74.8 LBS GW: 83.6 LBS
Cube Size (Pedestal)	: 24.4"x10.5"x9"	NW: 17.6 LBS GW: 19.8 LBS

AVON TABLE TOP WITH 42''x60'' 18'' BUTTERFLY LEAF

BEFORE ASSEMBLY

Thank you for purchasing this quality product. This product has been designed for easy assembly and constructed for durability. Please take the time to read and follow the assembly instructions carefully.

Be sure to check all packing material carefully for small parts which may have come loose inside the carton during shipment. Please separate, identify, and count all parts and metal hardware. Compare with part list to be sure all parts are present.
If hardware is missing or you have difficulty assembling this product, please call for us.

IMPORTANT NOTE:

- Place all wooden parts on a clean and smooth surface such as a rug or carpet to avoid the parts from being scratched.
- Remove all wrapping material, including staples & packing straps before you start to assemble.
- DO NOT tighten all screws and bolts until completely assembled.
- Keep all hardware parts out of reach of children.

PART LIST

When unpacking, please be careful not to discard any parts with the packaging. Before continuing, please make sure you have the following parts:

NO	Description	Qty	Sketch		NO	Description	Qty	Sketch
A	Top	1	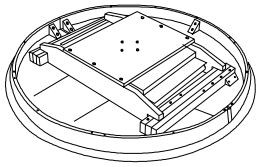		B	Pedestal column	1	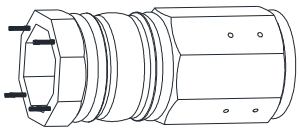
C	Leg	4	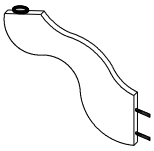					

HARDWARE LIST

When unpacking, please be careful not to discard any parts with the packaging. Before continuing, please make sure you have all of the following hardware:

NO	Description	Qty	Sketch	NO	Description	Qty	Sketch
1	Flat washer (Φ8.5xΦ19mm)	12		2	Lock washer (Φ8.5xΦ13mm)	12	
3	Hexagon nut (M8x13mm)	12		4	Wrench (M13mm)	1	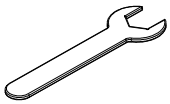
5	Allen key (4mm)	1	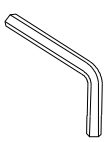				

AVON TABLE TOP WITH 42''x60'' 18'' BUTTERFLY LEAF

STEP 1

Attach Legs (C) to column (B) by using Nuts (3), and Washers (2) and (1). Tighten with Wrench (4) as shown below.

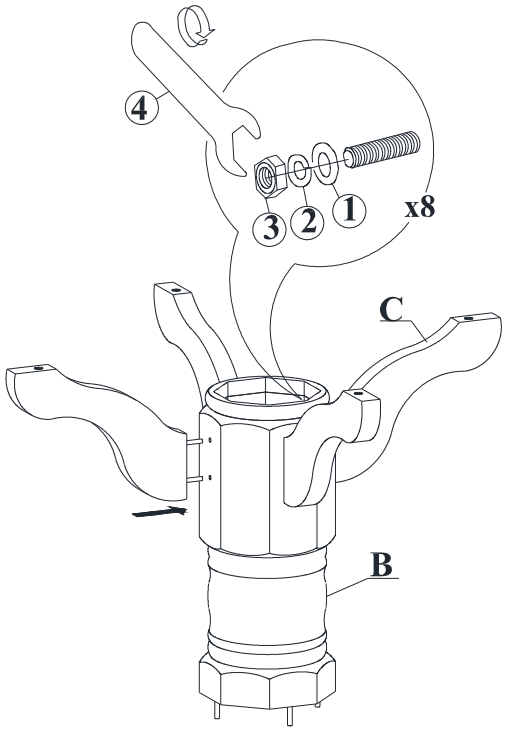

STEP 2

Use the Allen key (5) to loosen the bolts and take off the plate underneath of the table top.

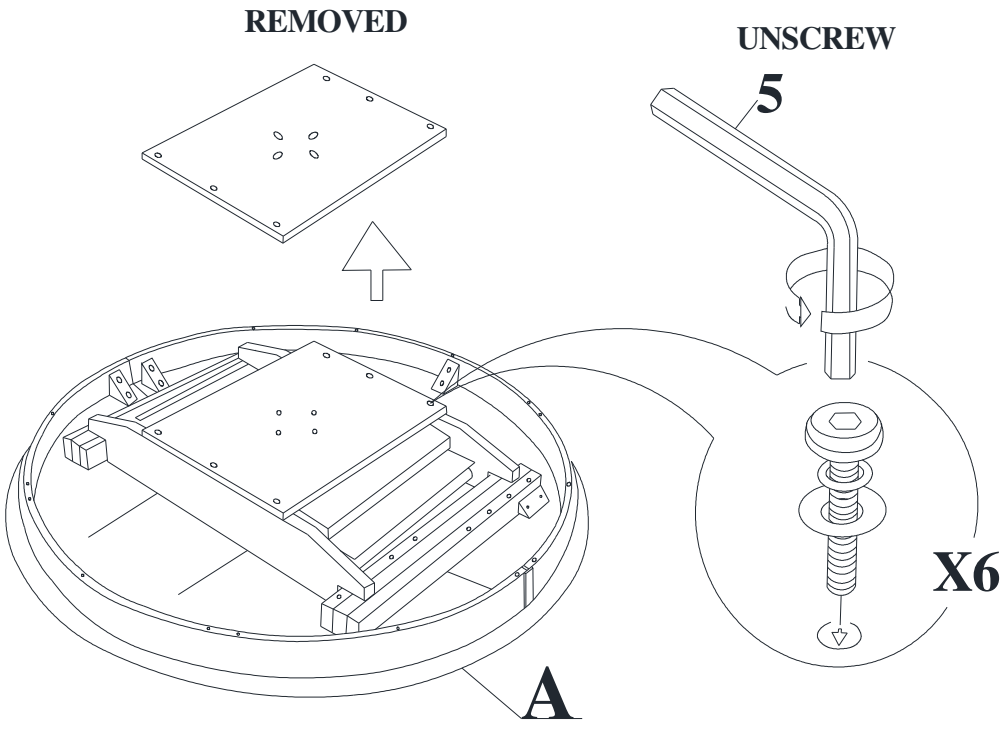

AVON TABLE TOP WITH 42''x60'' 18'' BUTTERFLY LEAF

STEP 3

Place the plate on top of the column (B), attach with washers (1), (2) and nuts (3). Tighten with the Wrench (4) as shown below.

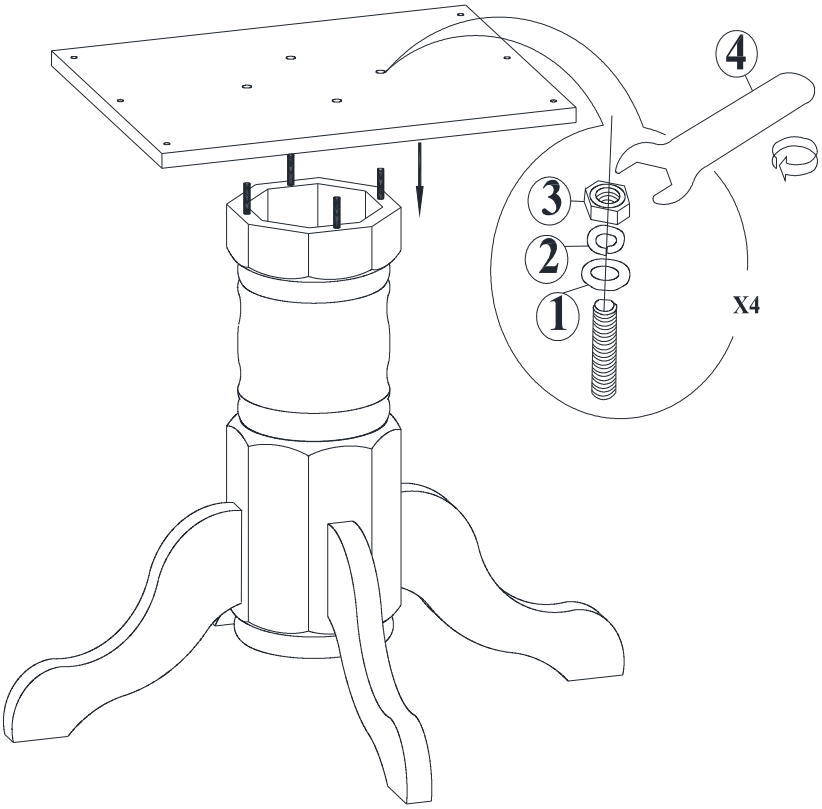

STEP 4

Carefully put the pedestal block on the bottom side of the table top, attach the top to plate with bolts (from step 2) and tighten with the Allen key (5)

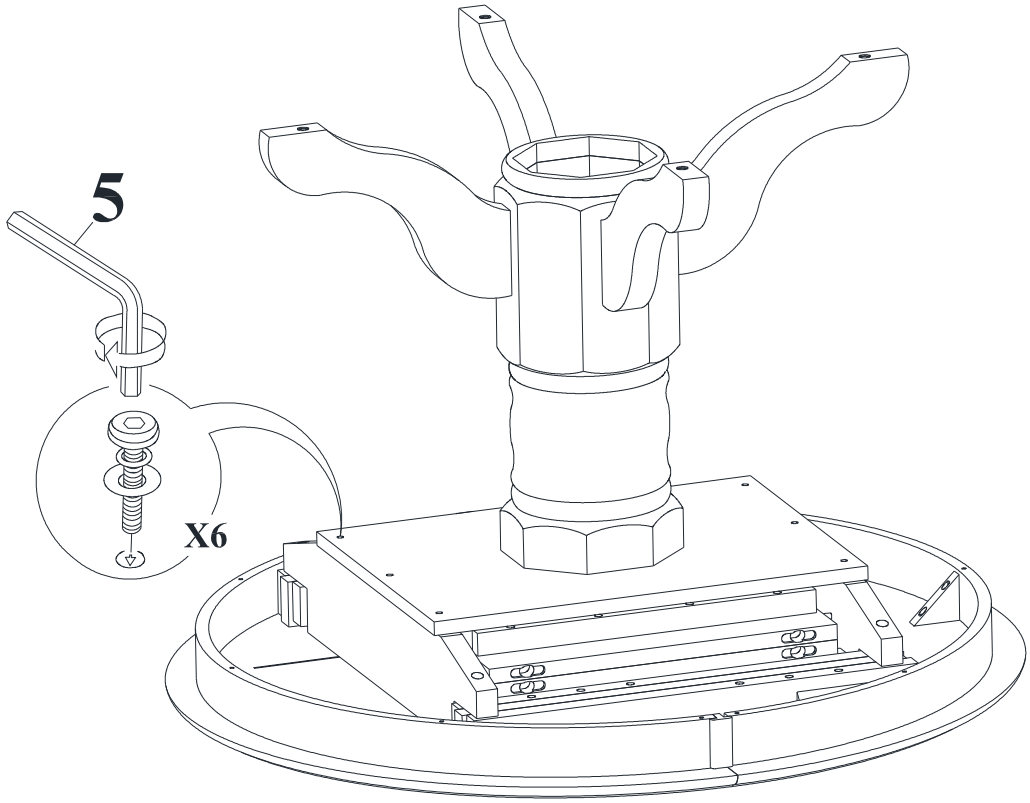

AVON TABLE TOP WITH 42''x60'' 18'' BUTTERFLY LEAF

STEP 5

Unlatch 2 end pieces of table top by the latches underneath table top. Pull the 2 ends of the table top apart.

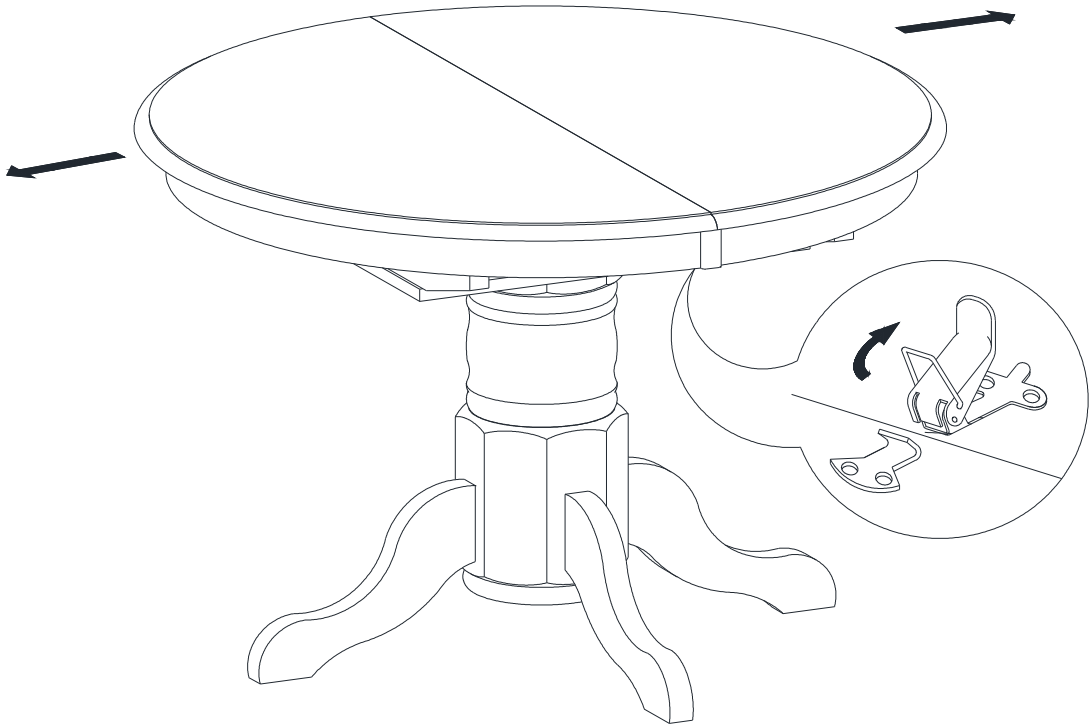

STEP 6

Unfold the butterfly leaf with the apron at both ends straightened up as shown on the Step 6. Place flattened butterfly leaf at the center of the table. Then push two end pieces inward making sure all pins & holes aligned. Latch them together by the 4 latches underneath table top

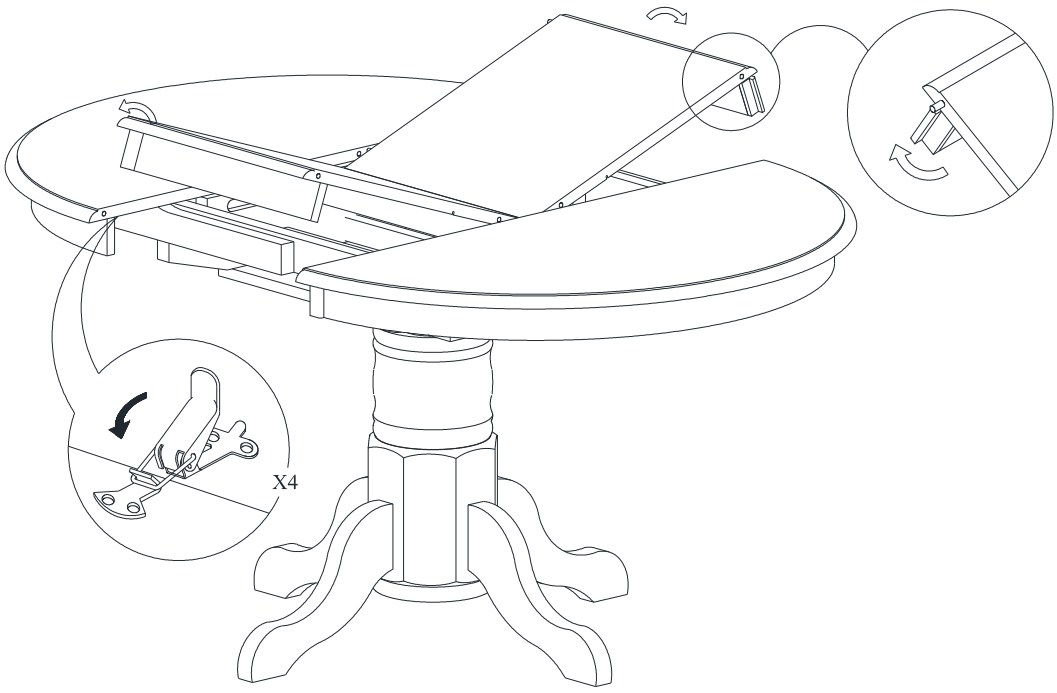

AVON TABLE TOP WITH 42''x60'' 18'' BUTTERFLY LEAF