WARNING: DISCONNECT POWER AT THE MAIN FUSE BOX BEFORE INSTALLATION.

WARNING:
This fixture is intended for installation in accordance with the National Electrical Code (NEC) and all local code specifications. If you are not familiar with code requirements, installation by a certified electrician is recommended.

Before assembly, remove all parts and part packages from box. If anything is missing, please contact the retailer from which the product was purchased.

1. Carefully pull house wires down out of junction box so house wires are easily accessed to connect fixture wires.
2. Position mounting bracket so head of ground screw and longer end of threaded pipe is pointing down towards floor. Place mounting bracket (A) up against junction box. Align each slot in mounting bracket (A) with each hole in junction box.
3. Thread one junction box screw (B) into each slot in mounting bracket (A) and into holes in junction box. Tighten junction box screws (B) to secure mounting bracket (A) to junction box.
4. Thread swivel (E) onto end of threaded pipe attached to mounting bracket (A). **CAUTION:** Make sure house wires are still easily accessible. **DO NOT** pinch wires between mounting bracket and ceiling.

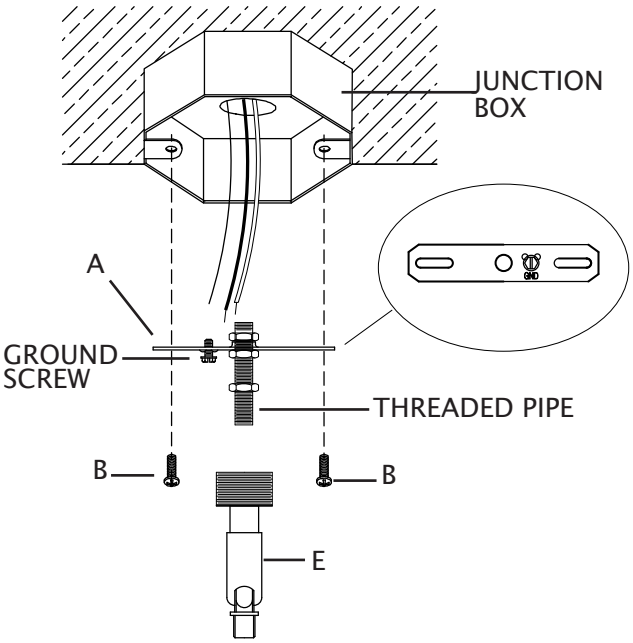

5. Carefully push fixture wires up through bottom of decorative stem (P). Pull fixture wires out of top of decorative stem (P). Screw bottom of decorative stem (P) onto top of fixture body (O).
6. Carefully push fixture wires up through bottom of 12 inch stem (M). Pull fixture wires out of top of 12 inch stem (M). Screw bottom of 12 inch stem (M) onto top of decorative stem (P).
7. Determine desired hanging height of fixture. Choose the number of remaining stems (M/N) to achieve that height.
8. Pass fixture wires through remaining stems (M/N). Attach remaining stems (M/N) to top of 12 inch stem (M).
9. Slip threaded ring (F) down over end of last stem.
10. Position canopy (D) so outside of canopy is pointing down towards fixture. Slip hole in canopy (D) over end of last stem.

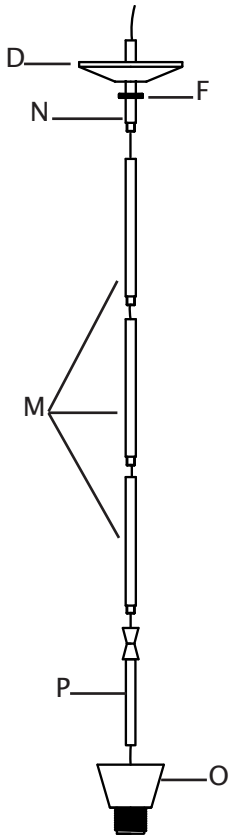

11. Strip 3/4” of insulation from ends of fixture wires.
12. Carefully push fixture wires up through bottom of swivel (E) attached to threaded pipe on mounting bracket (A). Pull fixture wires out of top of threaded pipe. Carefully pull fixture wires so they are easily accessible to connect to house wires.
13. Thread end of last stem onto swivel (E). DO NOT pinch wires between stem (M) and swivel (E).
14. Slightly loosen ground screw on mounting bracket (A). Do not completely remove ground screw. Wrap ground wire from junction box around ground screw, leaving enough ground wire to attach to fixture ground wire. Twist end of fixture ground wire and end of house ground wire together. Twist wire connector (C) onto ends of wires. Completely tighten wire connector (C). Reference chart below for correct wire connections.

Connect Supply (House) Ground Copper Wire to:
Bare Copper Wire or,
Bare Silver Wire or,
Green Insulated Wire.

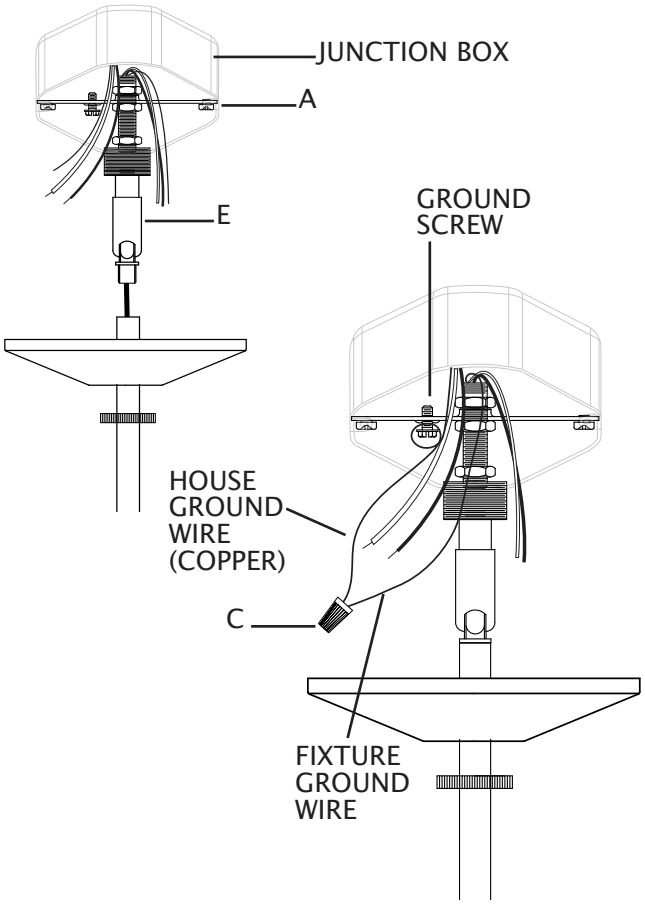

15. Twist end of house lead wire (black) and end of fixture lead wire together. Twist wire connector (C) onto ends of wires. Completely tighten wire connector (C). Twist end of house neutral wire (white) and end of fixture neutral wire together. Twist wire connector (C) onto ends of wires. Completely tighten wire connector (C). Reference chart to the right for correct wire connections.
16. Wrap electrical tape (not included) around wire connectors (C) and wires. Ensure wires are securely fastened into wire connectors.
17. Carefully push all wires and wire connectors into junction box.

Connect Black Lead Supply (House) Wire to:	Connect White Neutral Supply (House) Wire to:
Black Wire or,	White Wire or,
*Parallel Cord (Round and Smooth) or,	*Parallel Cord (Square and Ridged) or,
No printed words on wire insulation or,	Printed words on wire insulation or,
Insulated Wire (other than green) with Copper Conductor.	Insulated Wire (other than green) with Silver Conductor.
*When parallel wire (SPT 1 & SPT 2) is used: The lead wire is round in shape or smooth. The neutral wire is square in shape or ridged.	

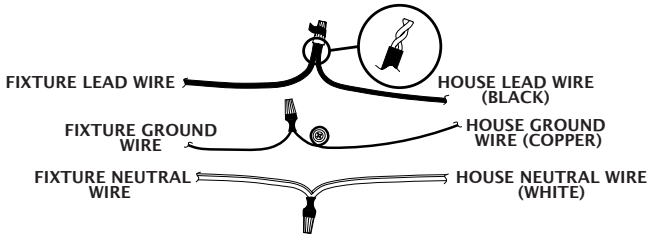

18. Raise canopy (D) up to ceiling. Pass hole in canopy (D) over swivel (E). Position canopy (D) up against ceiling.
19. Raise threaded ring (F) up to canopy (D). Screw threaded ring (F) onto swivel (E). Tighten threaded ring (F) to secure fixture to ceiling.

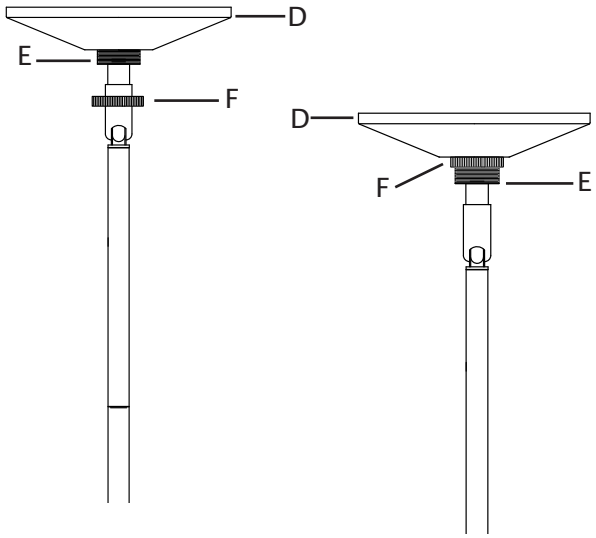

20. Slip trim ring (M) over socket.
21. Pass hole in top of shade (K) over socket. Thread socket ring (L) onto socket. Tighten socket ring (L) to secure shade (K) in place. DO NOT over tighten.
22. Screw recommended bulb (E26 Edison bulb type, not included) into socket. Verify correct bulb wattage marked on socket of fixture. **WARNING:** DO NOT exceed maximum bulb wattage.

