Aluminium glass sliding door

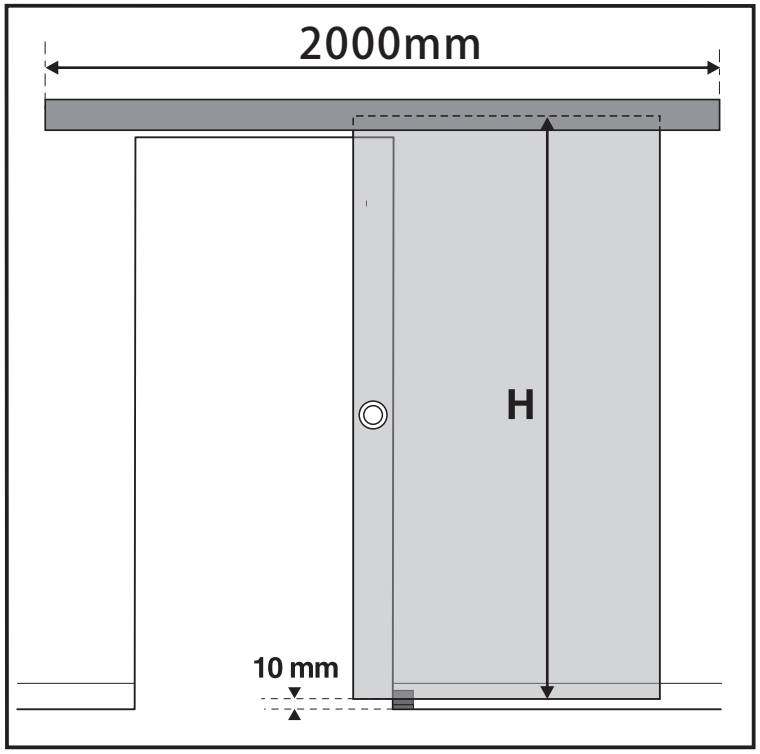

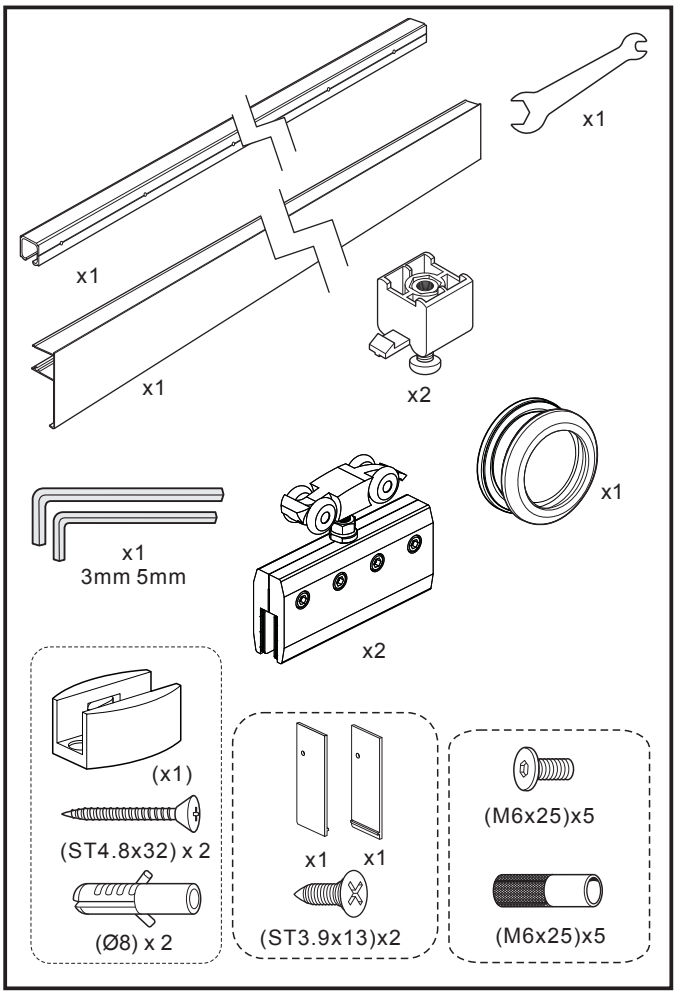

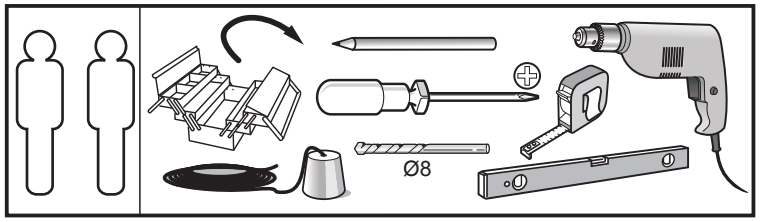

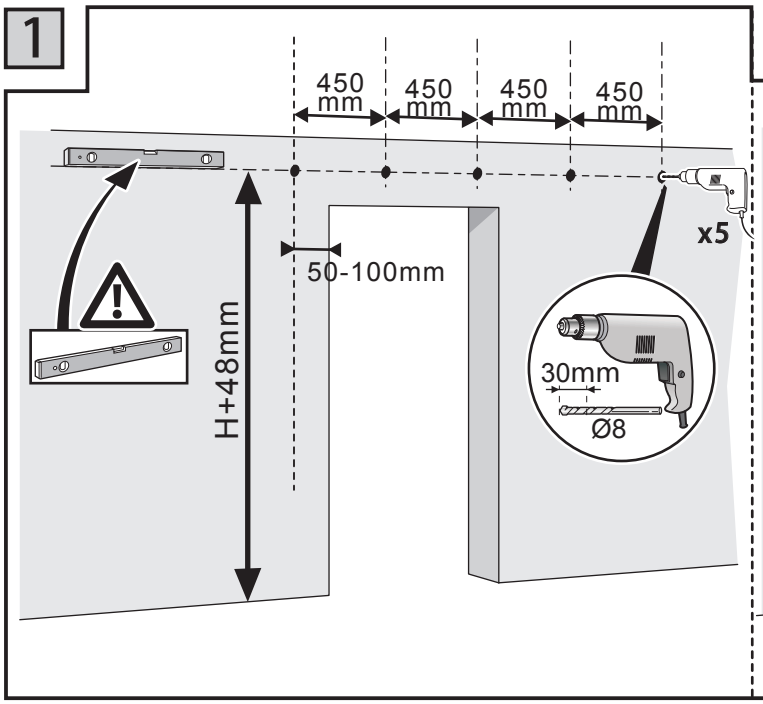

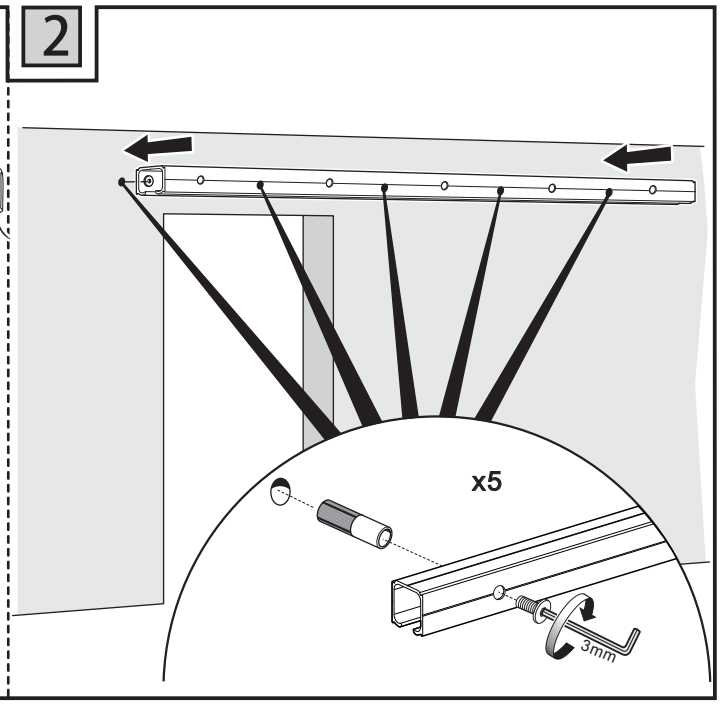

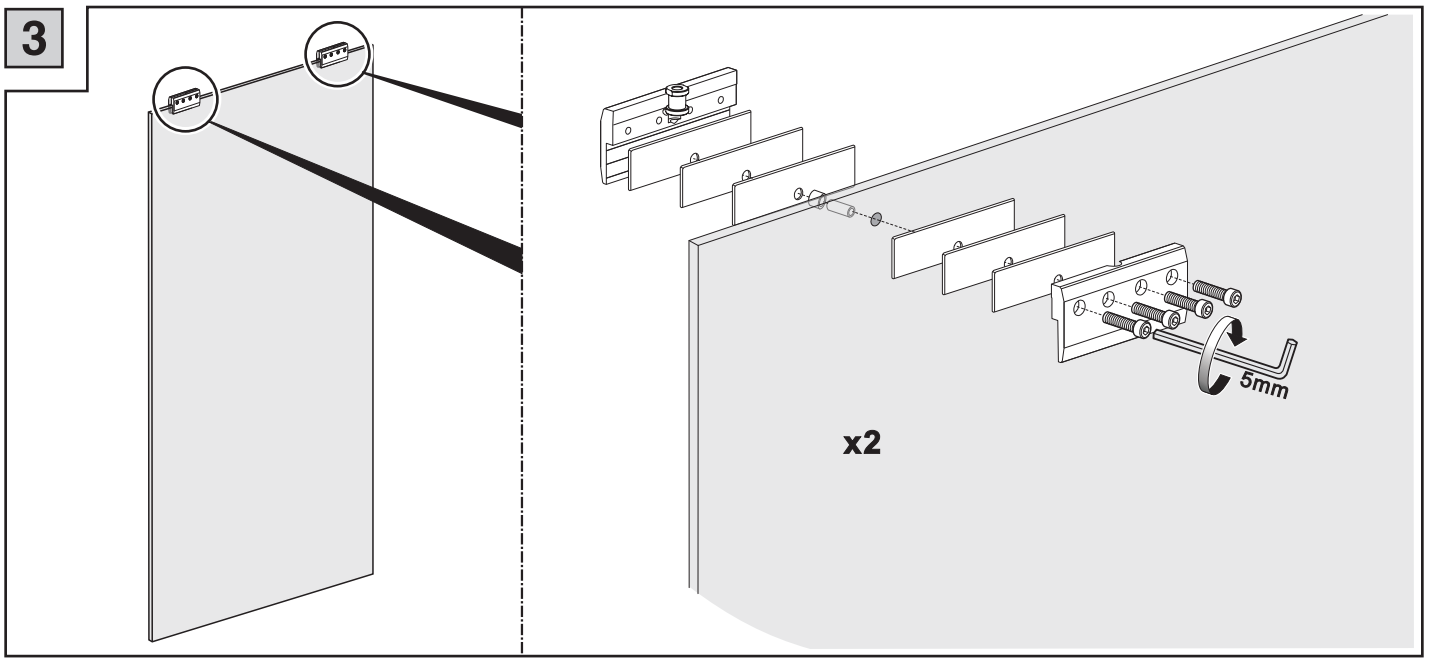
3
5mm
x2

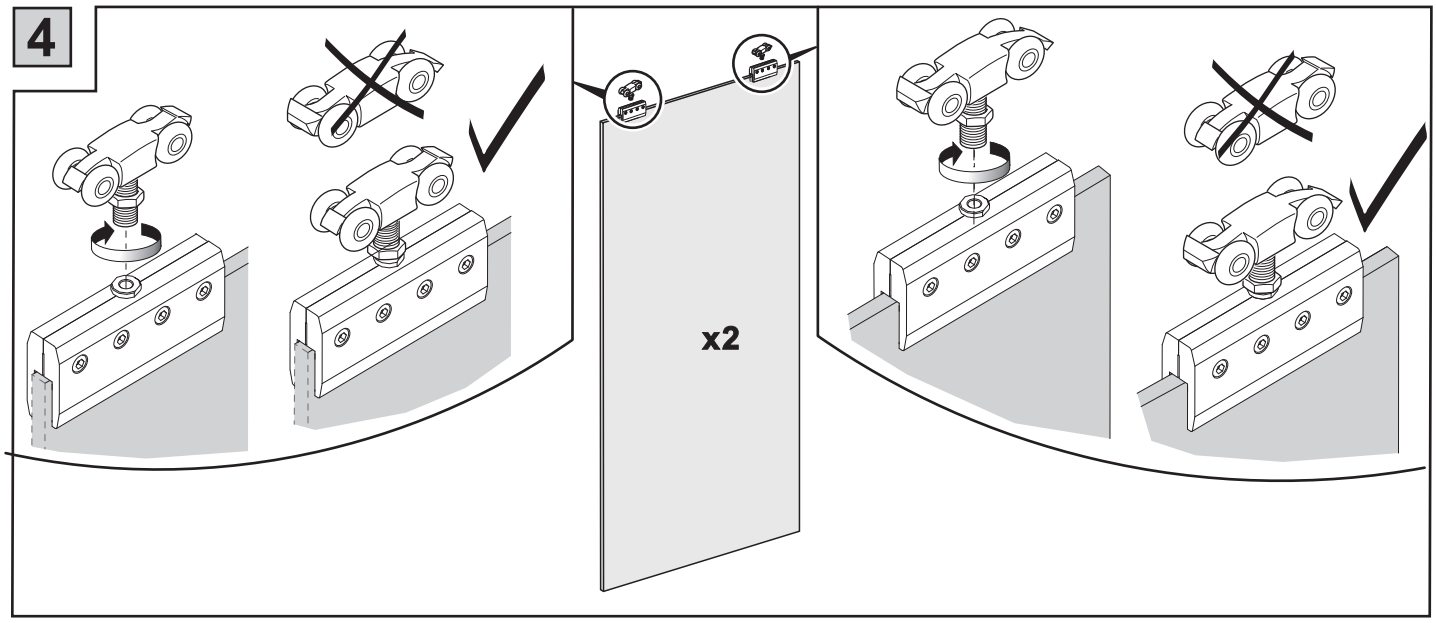
4
x2

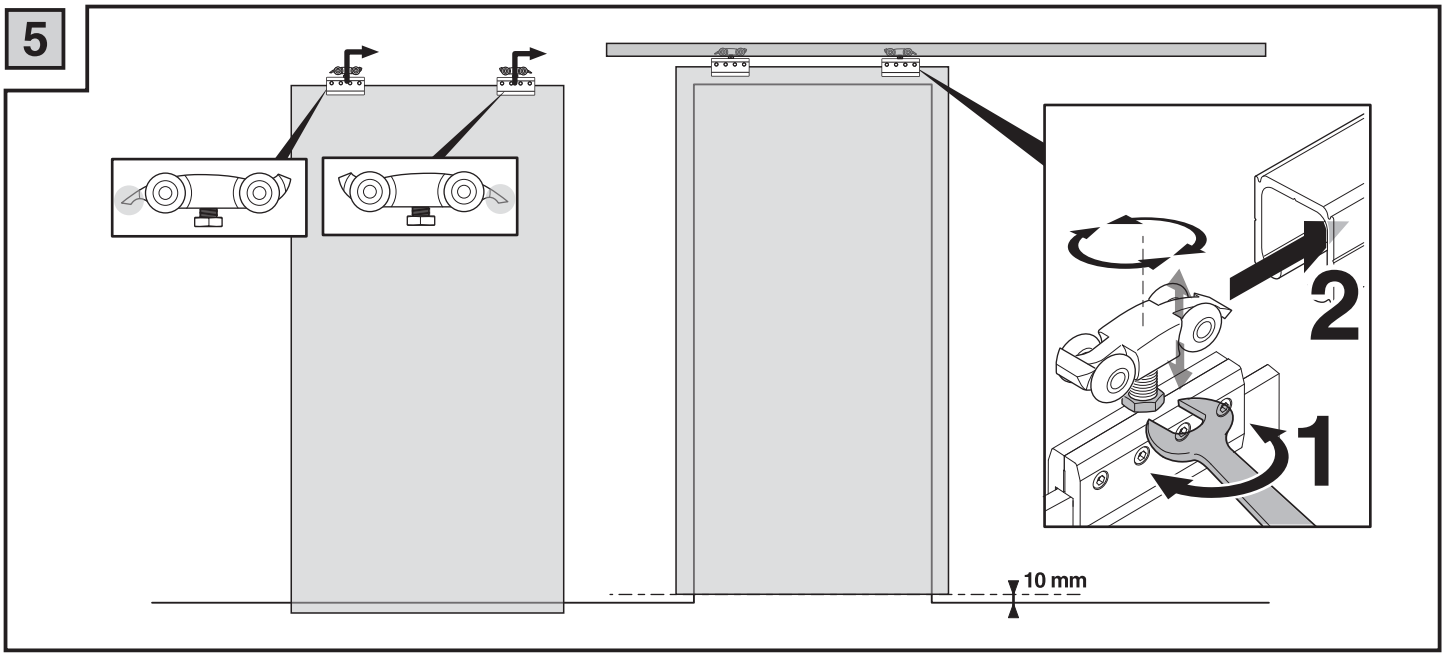
5
2
1
10 mm

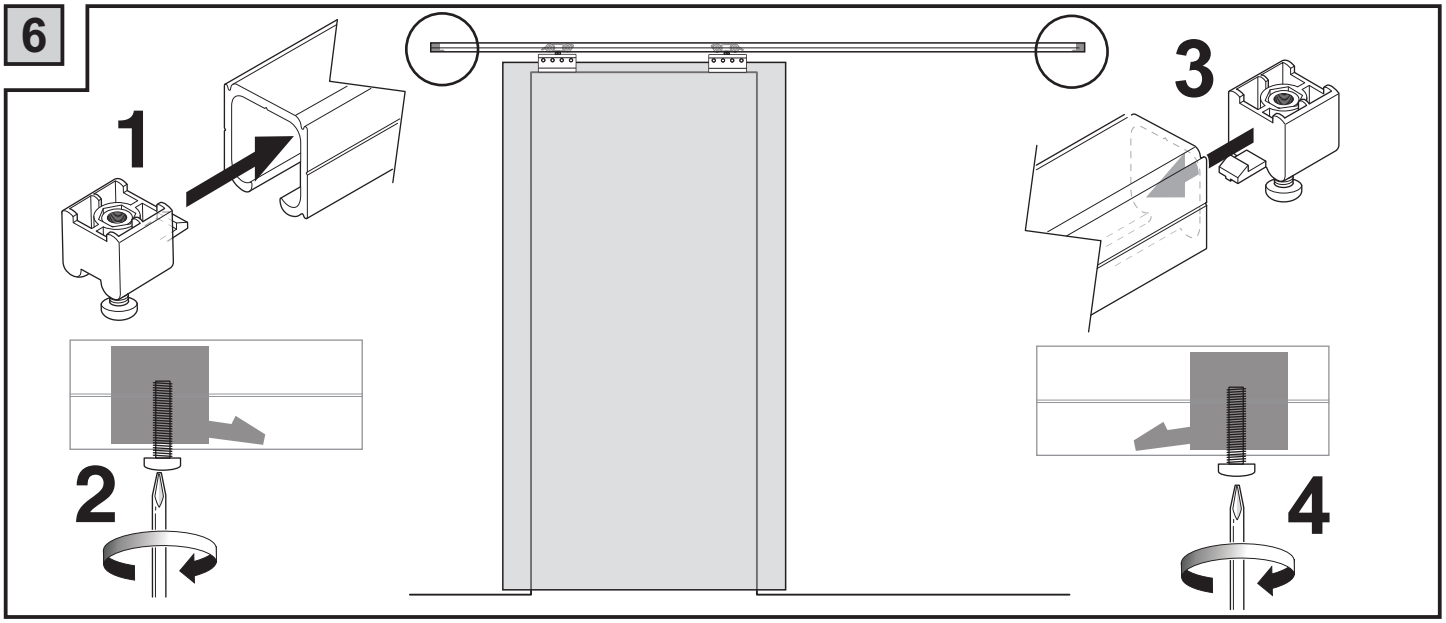
6
1
2
3
4

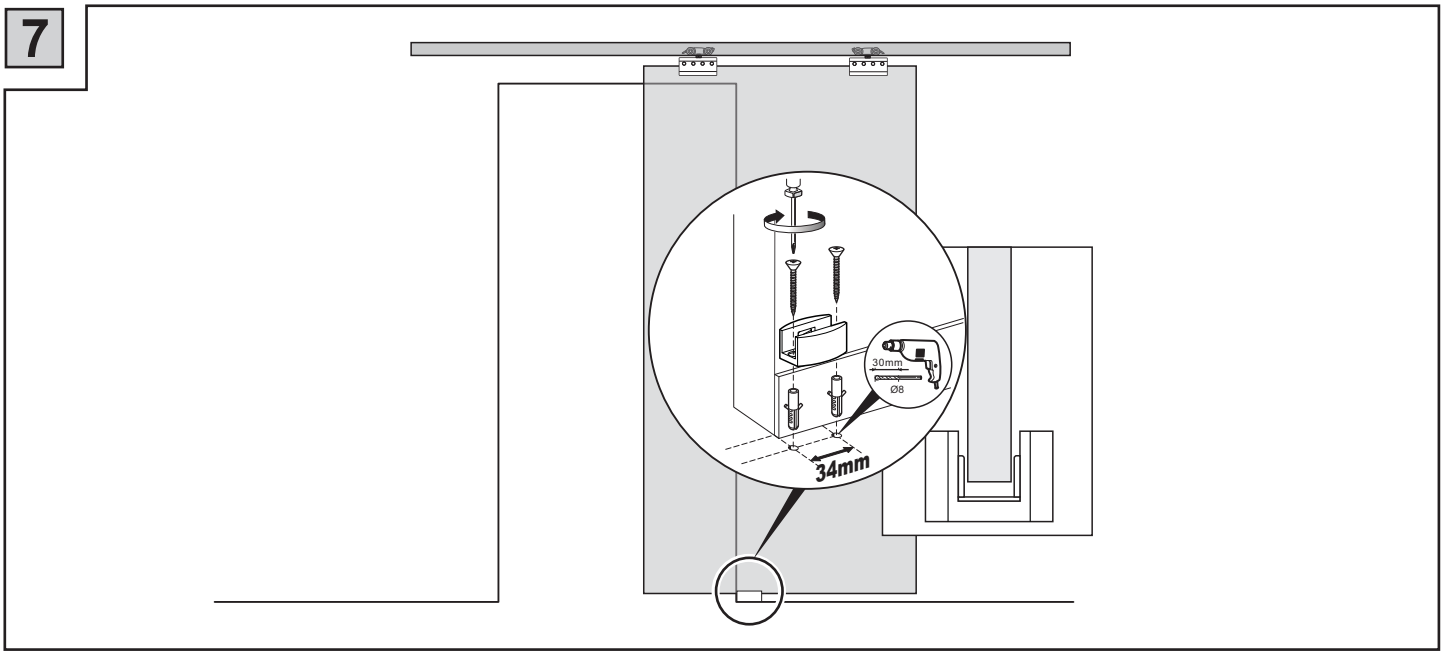
7
30mm
Ø8
34mm

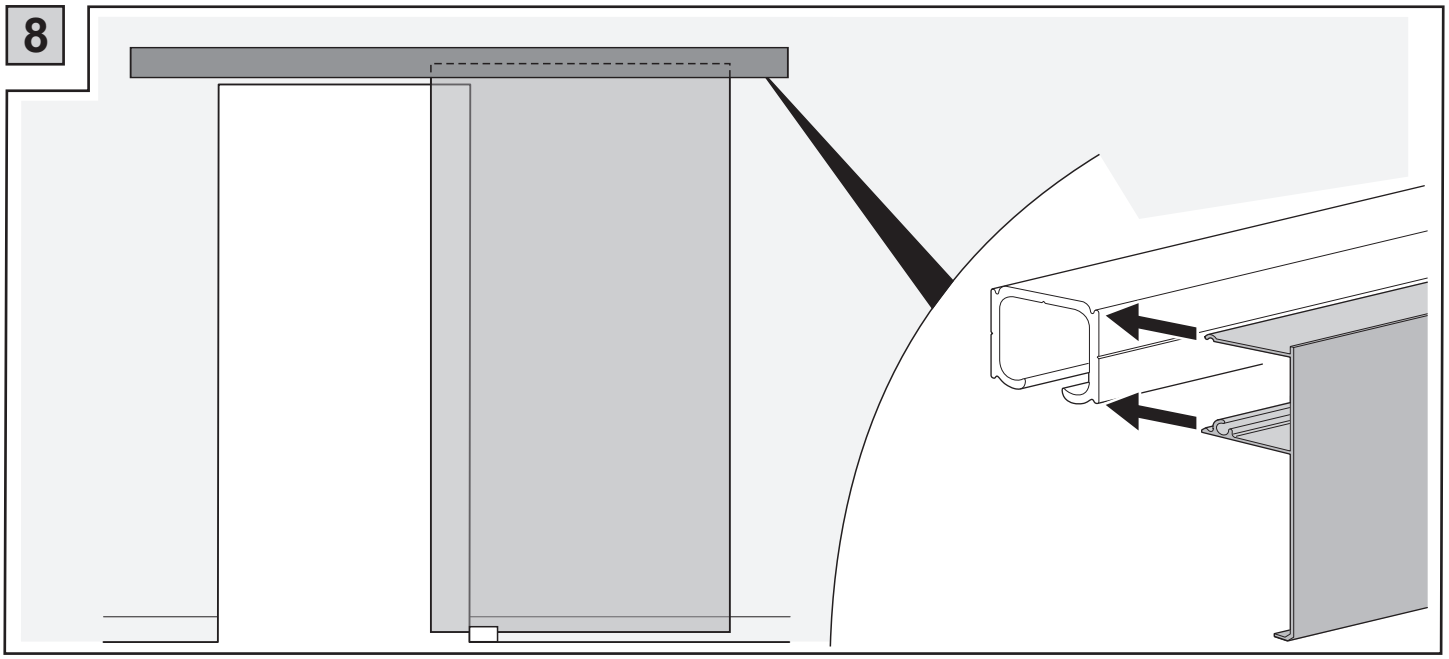
8

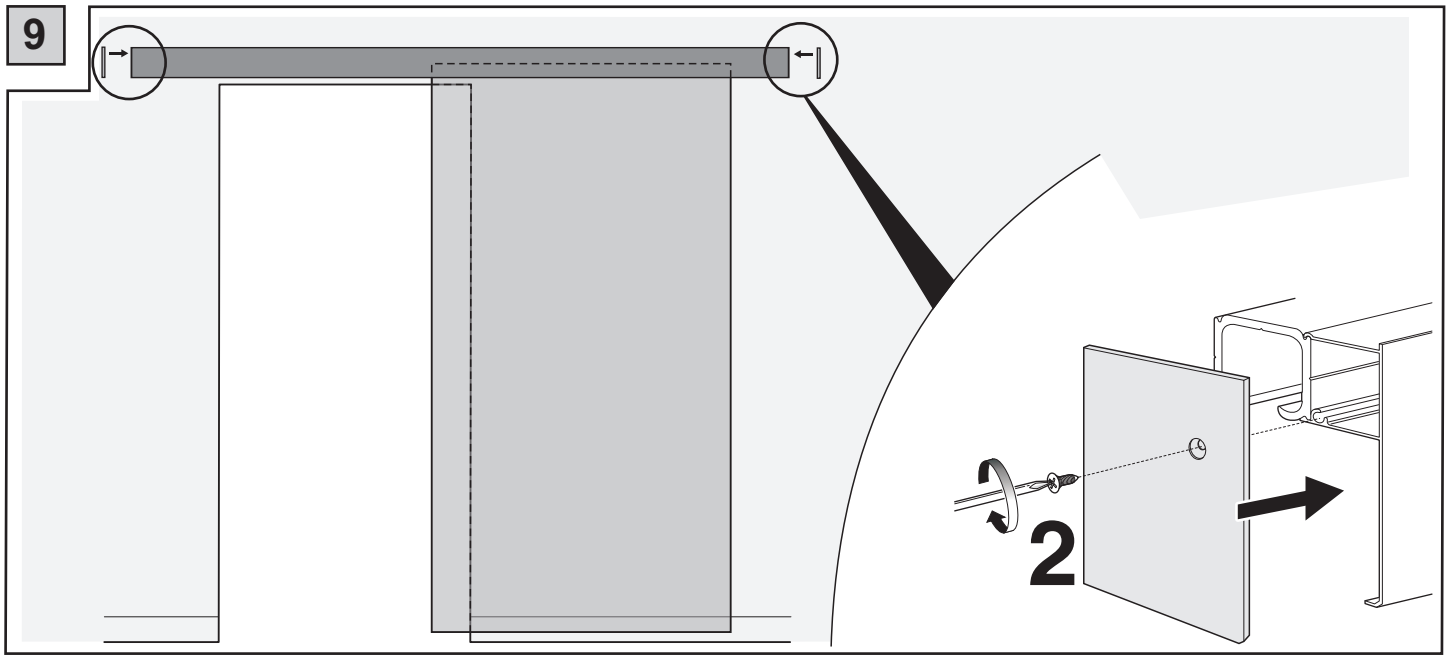
9
2

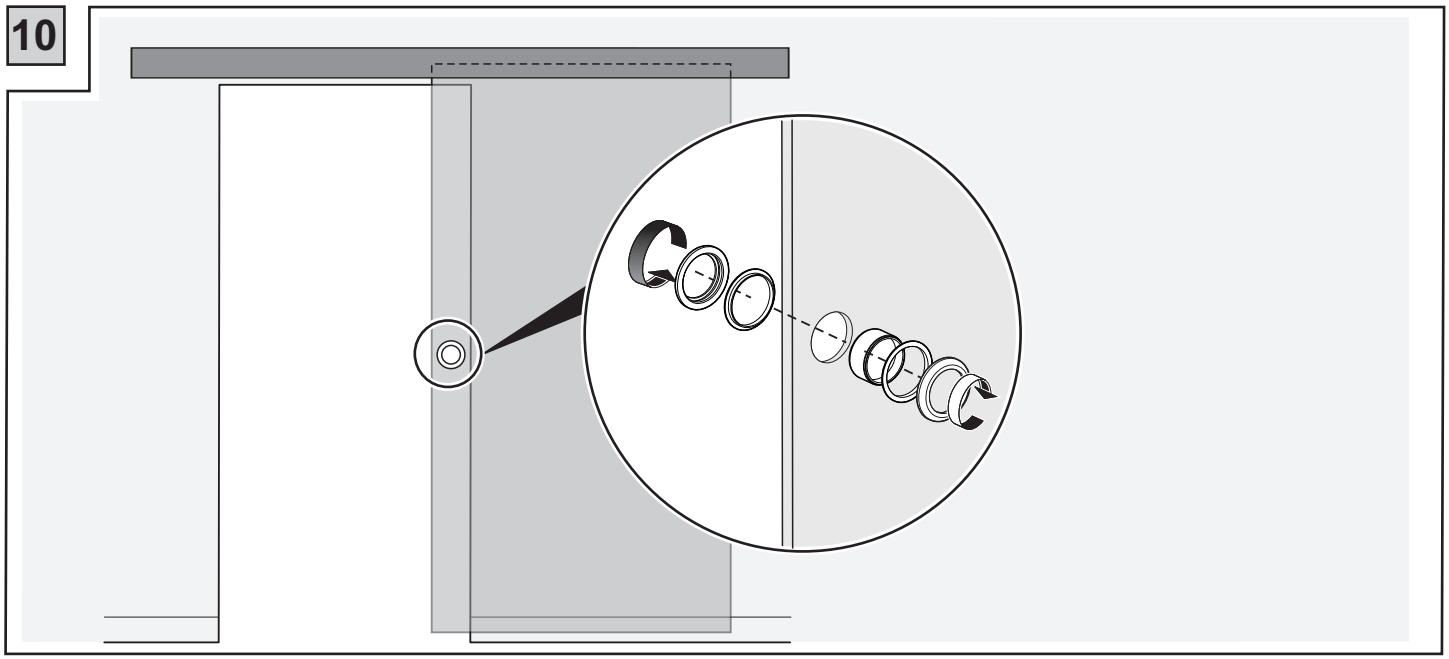
10