KB1480,1,2,5,7,8BL
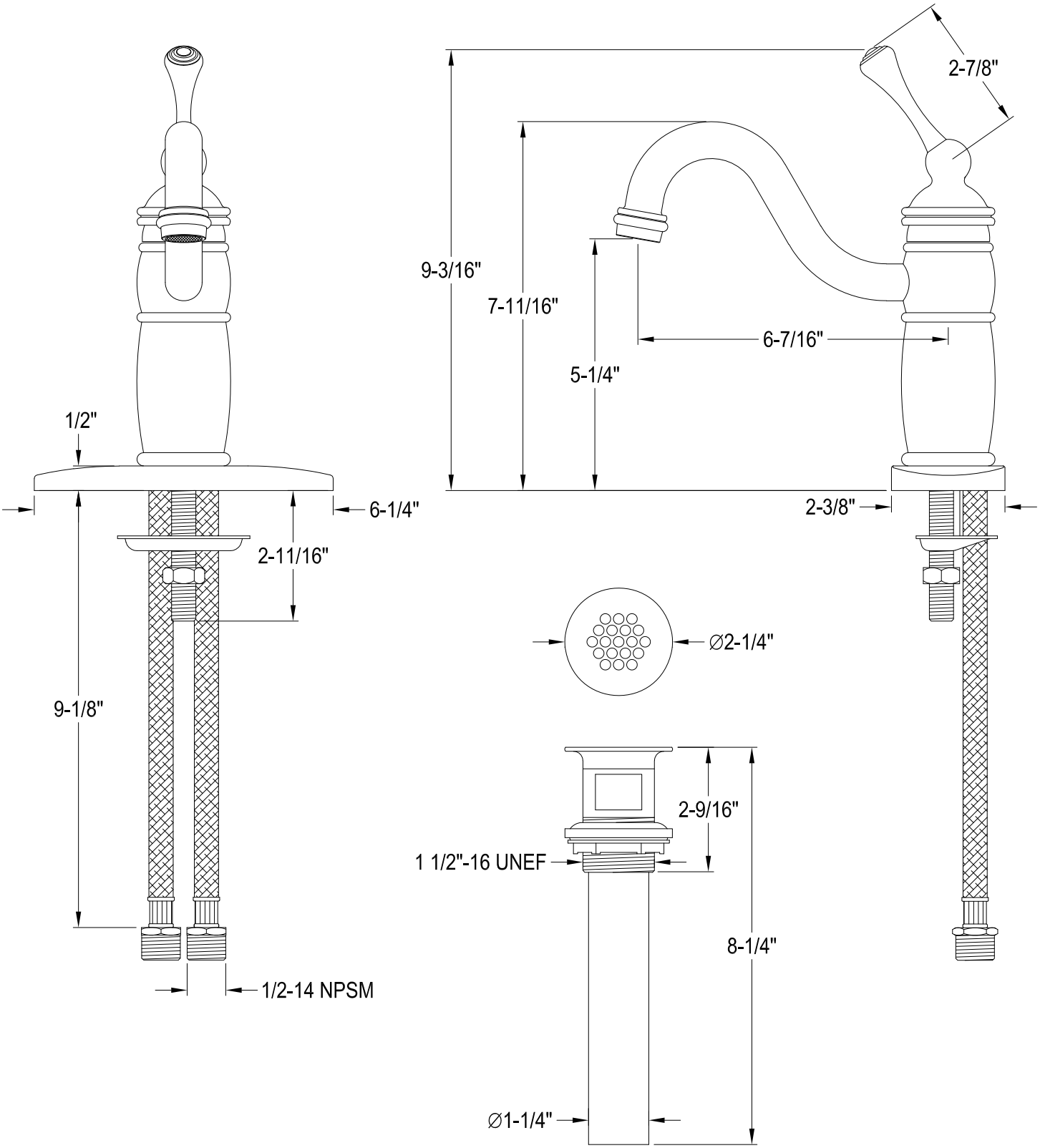
Single Handle 4" Centerset Lavatory Faucet With Grid Strainer