ASSEMBLY INSTRUCTIONS



TOOLS REQUIRED



Screwdriver
(Not Included)



(Included)
Allen Wrench



2 - People

ASSEMBLY RATING



EASY ———— DIFFICULT

The Assembly Rating is a 5-point system showing the level of effort needed to assemble a specific product.

CHECK BEFORE STARTING

- [ ] **Are you missing anything?**
  Double-check all parts, hardware and accessories listed are all acccounted for.
- [ ] **Should we send any replacements?**
  Are there any irregularities or flaws in the parts? We can send replacements!
- [ ] **Check out our Quick Tips!**
  We recommend reviewing the pre-assembly handouts. Even experts need a refresher now and then!
- [ ] **Prep Time!**
  Please review the assembly instructions and all diagrams prior to assembling.

PRE ASSEMBLY INTRODUCTION

We understand building ready-to-assemble furniture can be a challenging experience for some. To help avoid confusion, we have provided some helpful tips that may speed up the process.



Teamwork

ALWAYS have at least two people to help with transporting and assembling the product to avoid potential injury and/or damage.

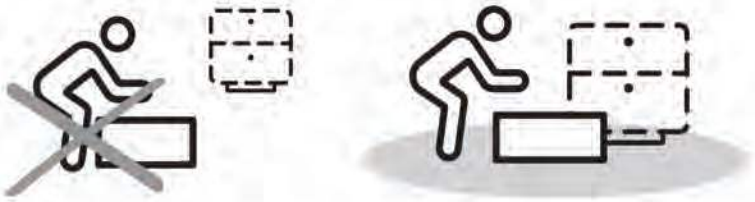

Suitable Location

Assembling near the area of the intended location is highly recommended.



Sufficient Space

Make sure you have enough space to move around during the assembly.

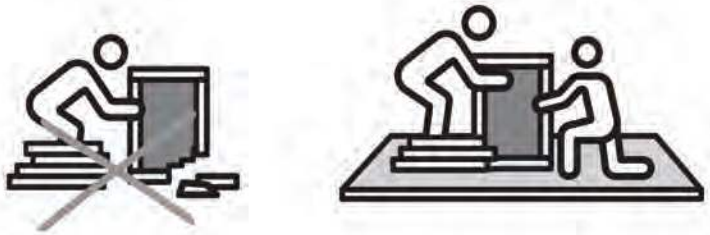

Avoid Scratches

Use cardboard, blankets or a carpeted area while assembling furniture to prevent to prevent scratches and damages.

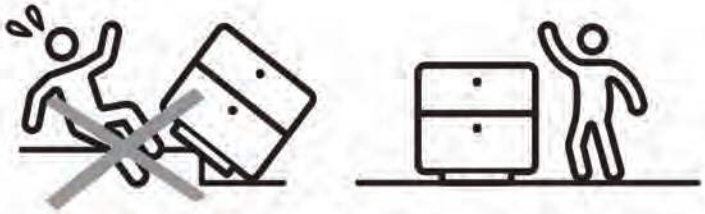

Flat Surface

Make sure the furniture rests on a flat and level surface with each leg evenly touching the floor.

ASSEMBLY AND CARE ADVICE

FAILURE TO FOLLOW THE GUIDELINES BELOW MAY RESULT IN INJURY AND/OR PROPERTY DAMAGE.



Position each part correctly and insert screws or bolts into their respective holes.

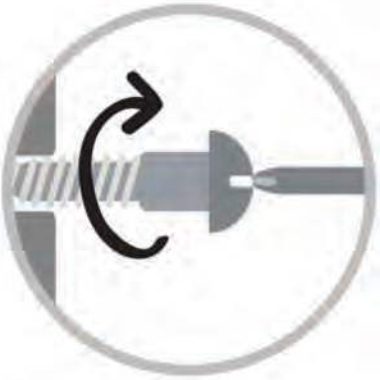

Turn clockwise to tighten and only tighten when step is completed or when instructed to do so.



Use the appropriate hand tools or power tools for assembly. Select steps, such as tightening screws and/or bolts, may require hand tools to avoid causing damage during assembly.



Save the instructions and store any supplied tools for later maintenance.



After two weeks, check and tighten any loose hardware and repeat again every six months thereafter.

IT IS THE USER'S RESPONSIBILITY TO MAINTAIN THE FURNITURE. THE HARDWARE MAY LOOSEN OVER TIME AND MAY CAUSE THE FURNITURE TO BE WOBBLY AND UNABLE TO SUPPORT ITS INTENDED WEIGHT CAPACITY. THIS MAY LEAD TO COLLAPSE AND MAY CAUSE SERIOUS INJURY.

QUEEN/ FULL BED

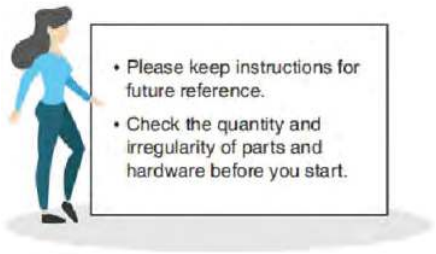



PARTS

1

Headboard
1pc

2

Left Wing
1pc

3

Right Wing
1pc

4

Leg
4pcs

5
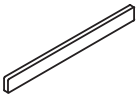
Footboard
1pc

6
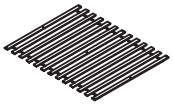
Slat
1set

7

Side Rail
2pcs

8

Middle slat
1pc

9

Support Leg
4pcs

HARDWARE

A

Bolt Ø5/16"x1"
16pcs

B

Bolt Ø5/16"x1-1/2"
6pcs

C

Flat Washer
Ø5/16"x19mm
22pcs

D

Spring Washer
22pcs

E

Allen Key
1pc

F

Screw M4x30mm
9pcs

Exploded View

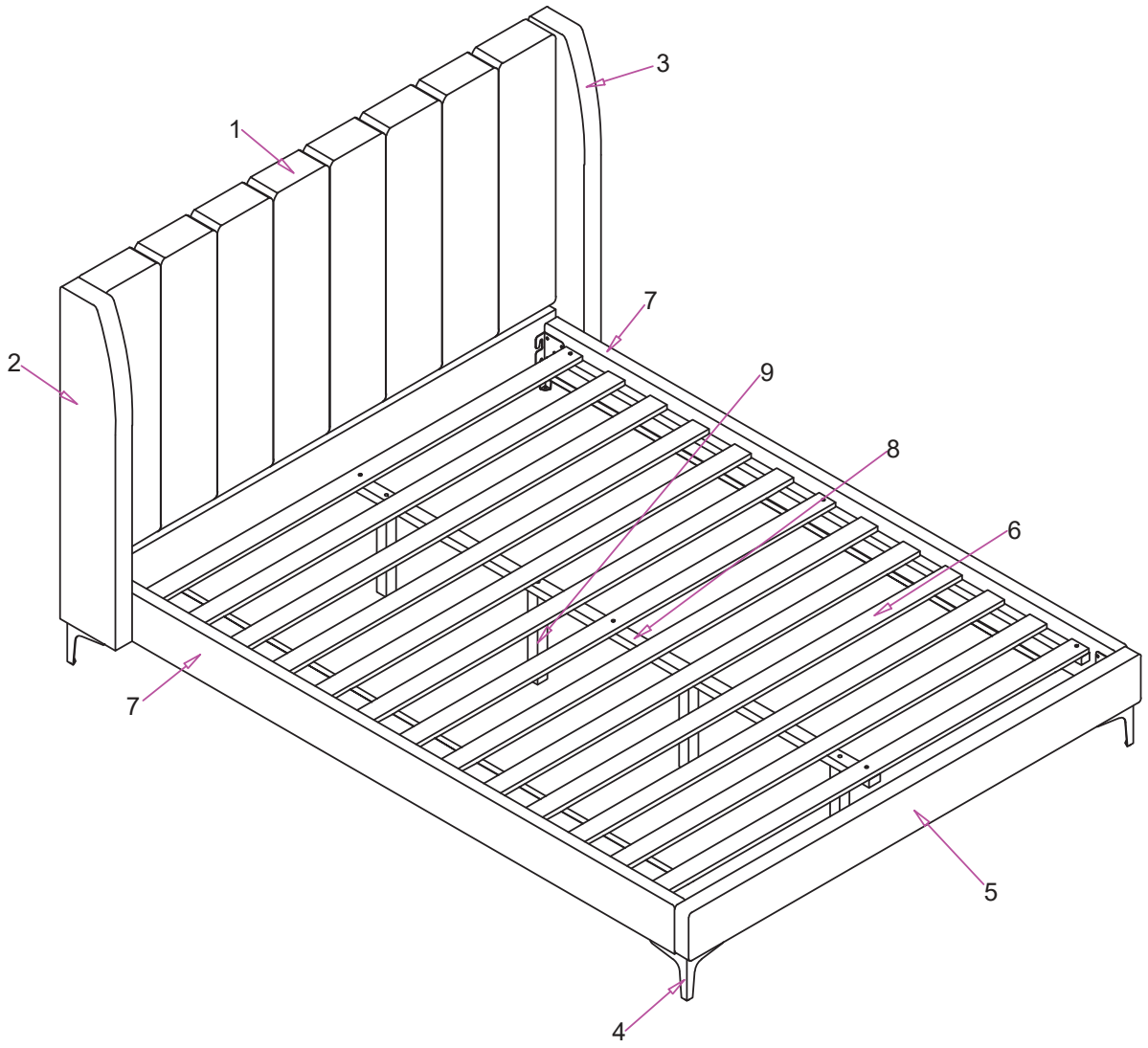

Carton	Designation	Part		Hardware
	Headboard	1	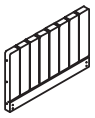	
	Left Wing	2		
	Right Wing	3		
	Slat	6		
	Leg	4		 A 16pcs  B 6pcs  C 22pcs  D 22pcs  E 1pc  F 9pcs
	Footboard	5	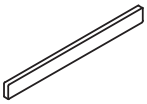	
	Side Rail	7		
	Middle slat	8		
	Support Leg	9		

ASSEMBLY INSTRUCTIONS

1

Part 1 x1pc
Part 2 x1pc
Part 3 x1pc

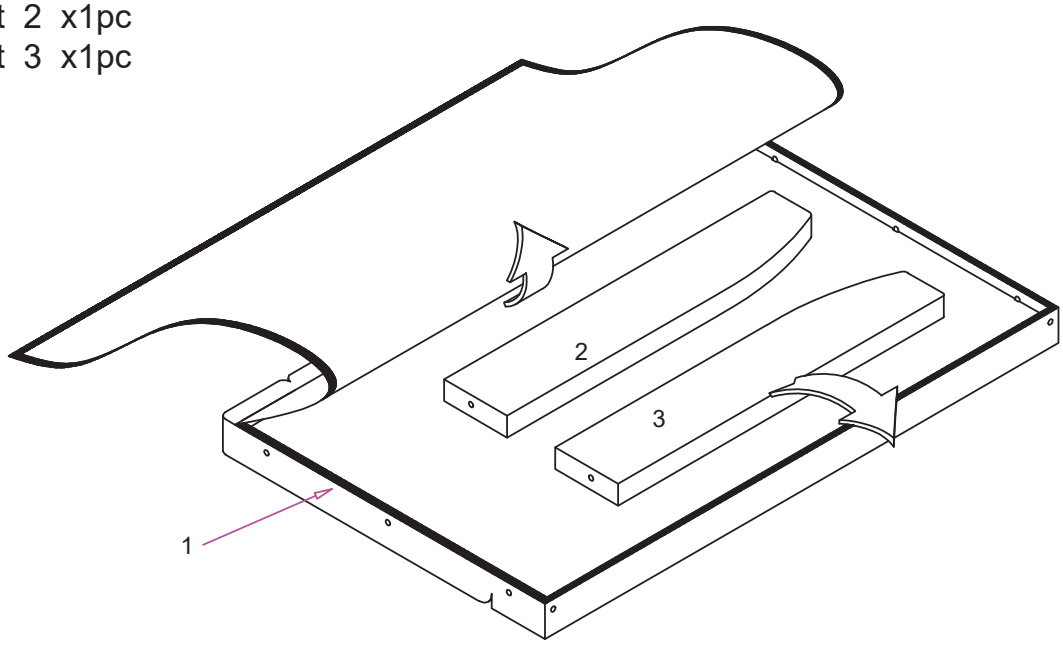

2

Part 1 x1pc
Part 2 x1pc
Part 3 x1pc
Hardware B x6pcs
Hardware C x6pcs
Hardware D x6pcs
Hardware E x1pc

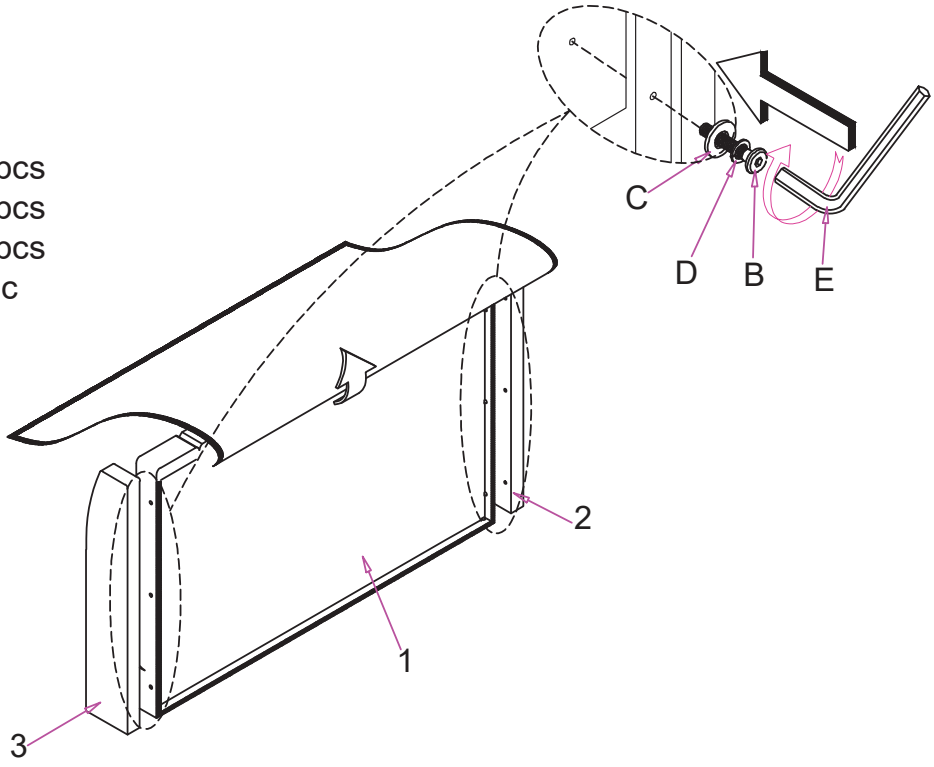

ASSEMBLY INSTRUCTIONS

3

Part 2 x1pc
Part 3 x1pc
Part 4 x4pcs
Part 5 x1pc
Hardware A x6pcs
Hardware C x6pcs
Hardware D x6pcs
Hardware E x1pc

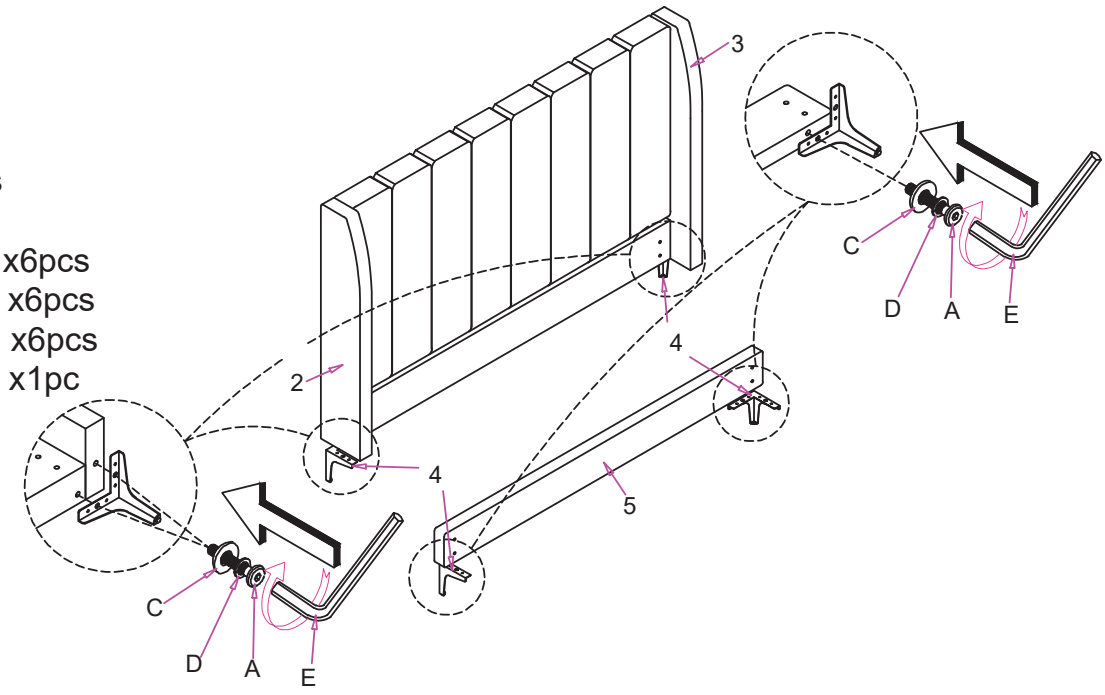

4

Part 1 x1pc
Part 4 x4pcs
Part 5 x1pc
Part 7 x2pcs
Hardware A x10pcs
Hardware C x10pcs
Hardware D x10pcs
Hardware E x1pc

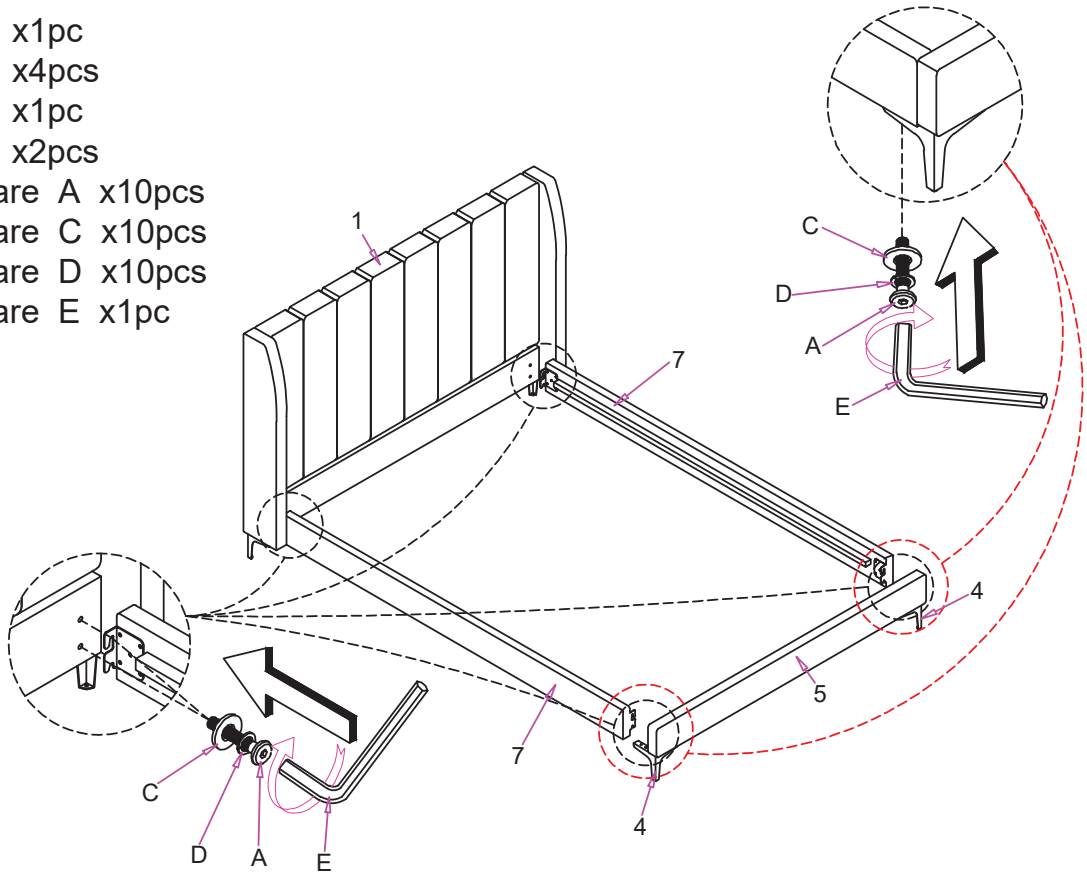

ASSEMBLY INSTRUCTIONS

5

Part 8 x1pc
Part 9 x4pcs

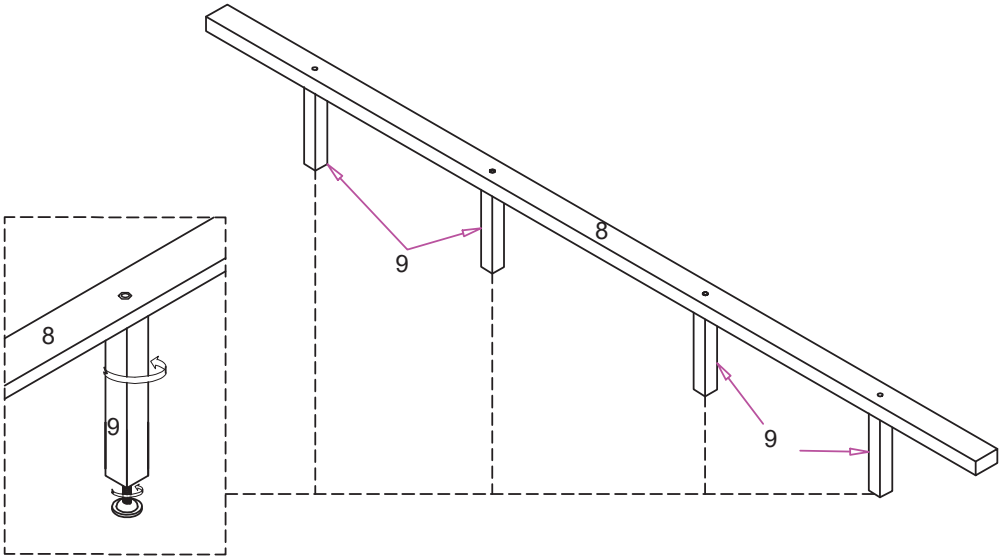

6

Part 6 x1set
Part 8 x1pc
Hardware F x3pcs

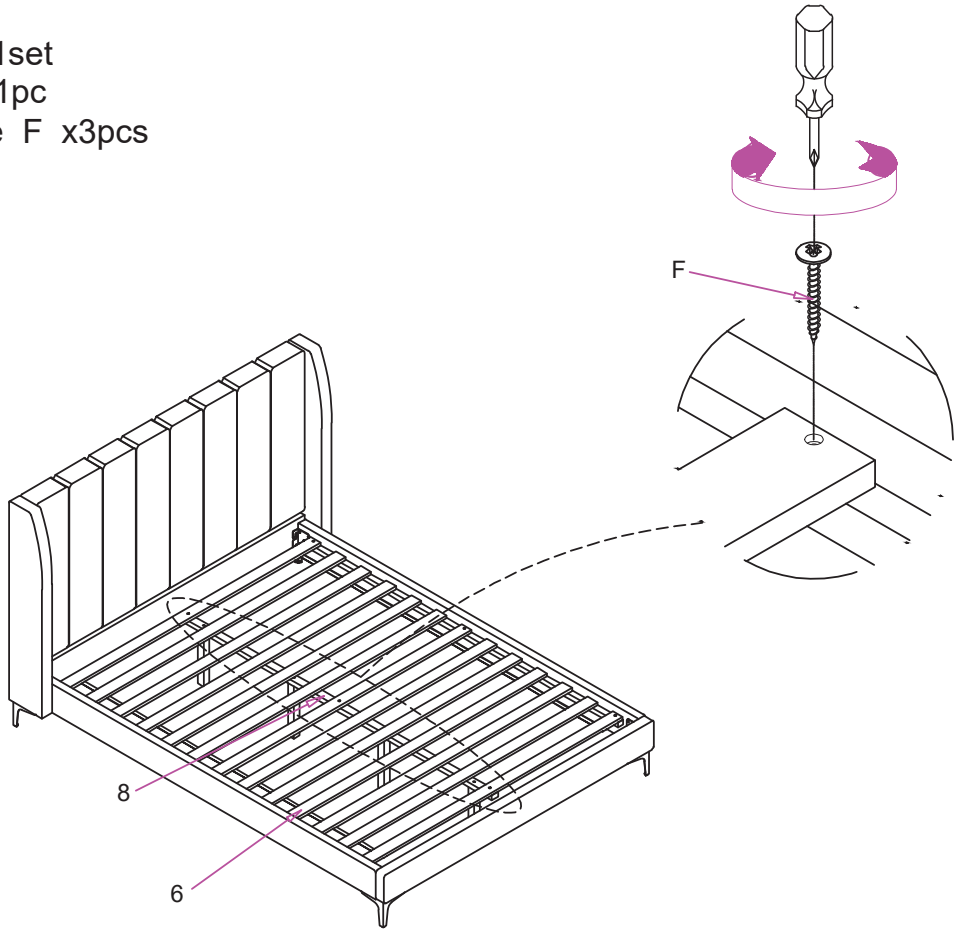

ASSEMBLY INSTRUCTIONS

7

Part 6 x1set
Part 7 x2pcs
Hardware F x6pcs

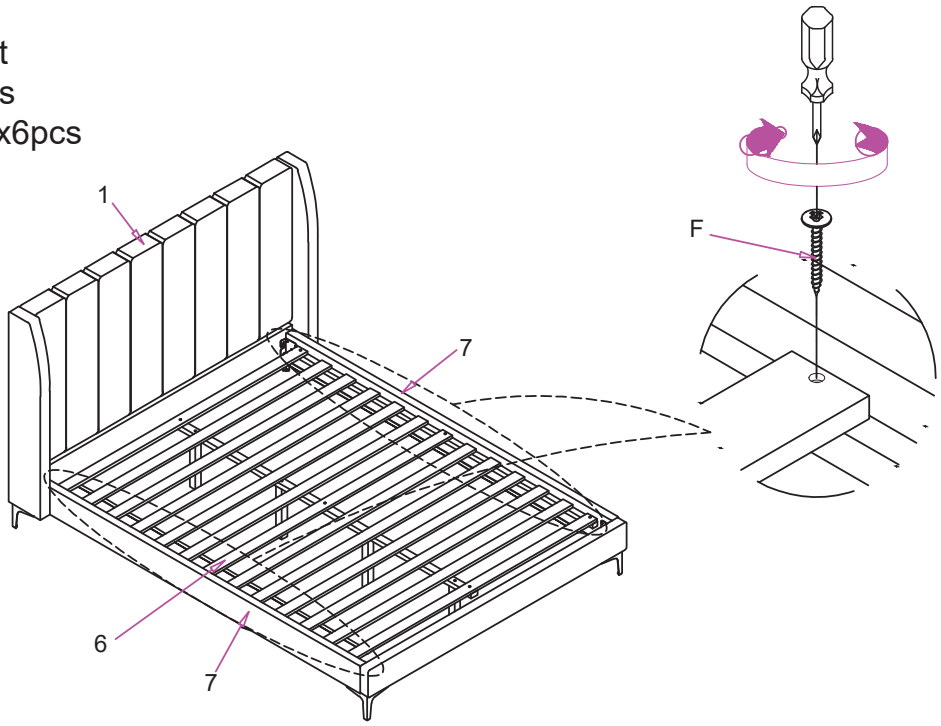

8





This product is intended for RESIDENTIAL USE ONLY and not for commercial use.