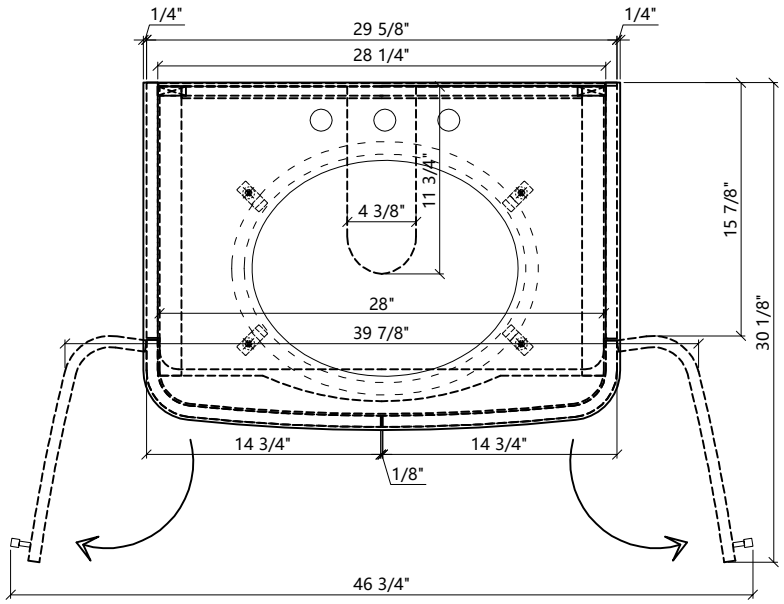
1/4"
29 5/8"
1/4"
28 1/4"
11 3/4"
4 3/8"
15 7/8"
28"
39 7/8"
30 1/8"
14 3/4"
14 3/4"
1/8"
46 3/4"

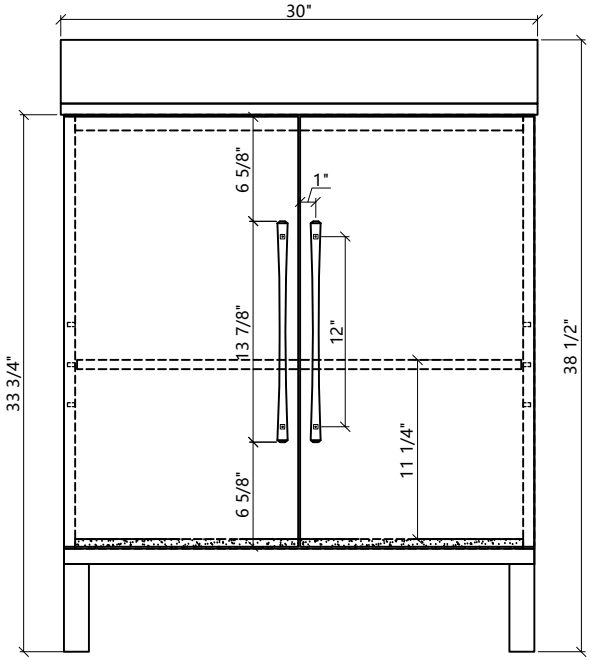
30"
6 5/8"
1"
13 7/8"
12"
33 3/4"
38 1/2"
11 1/4"
6 5/8"

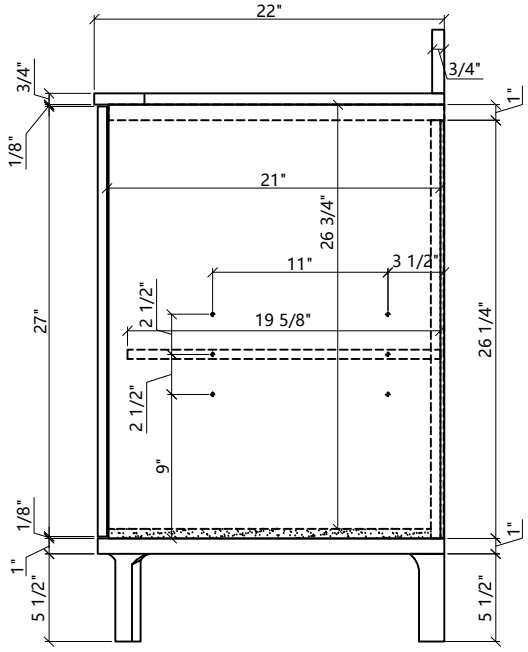
22"
3/4"
3/4"
1"
1/8"
21"
26 3/4"
11"
3 1/2"
2 1/2"
19 5/8"
27"
26 1/4"
2 1/2"
9"
1/8"
1"
1"
5 1/2"
5 1/2"

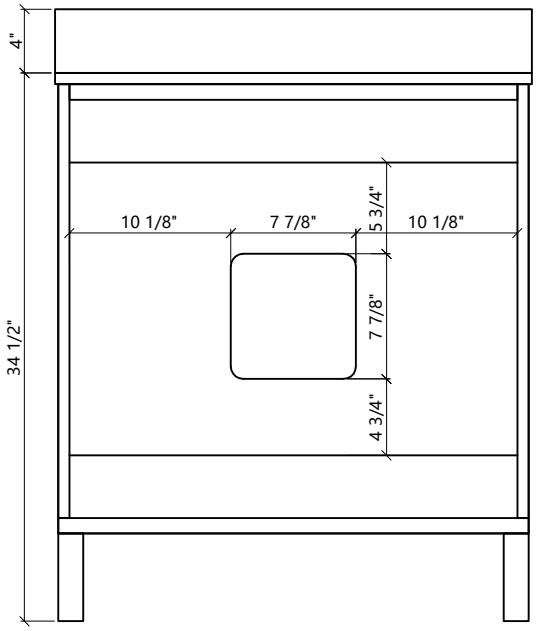
4"
10 1/8"
7 7/8"
5 3/4"
10 1/8"
7 7/8"
34 1/2"
4 3/4"

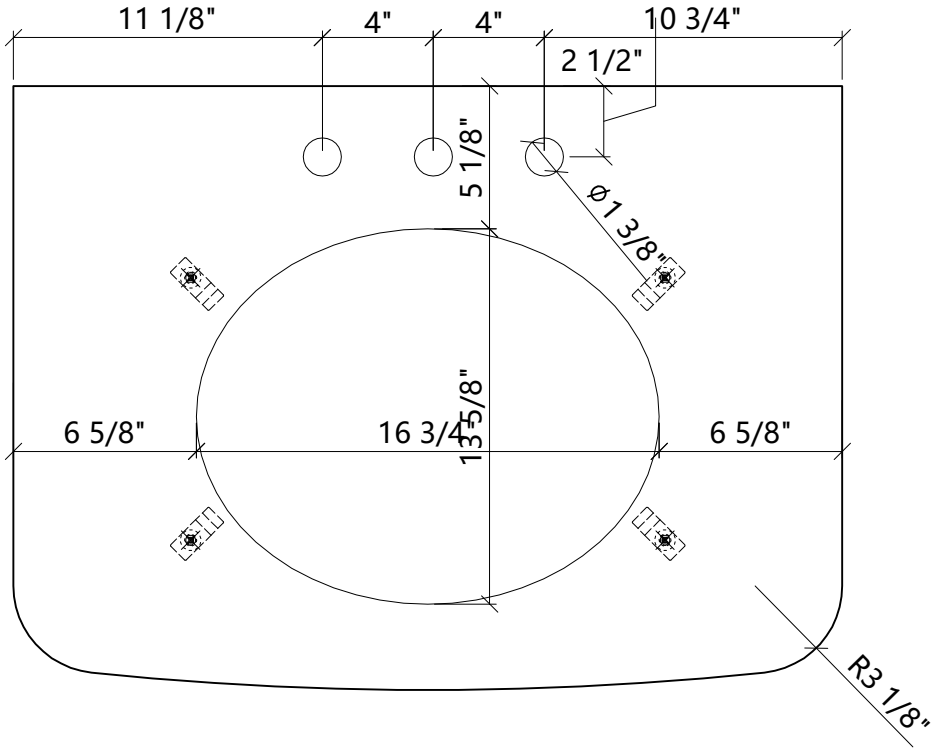
11 1/8"
4"
4"
10 3/4"
2 1/2"
5 1/8"
Ø1 3/8"
6 5/8"
16 3/4"
13 5/8"
6 5/8"
R3 1/8"

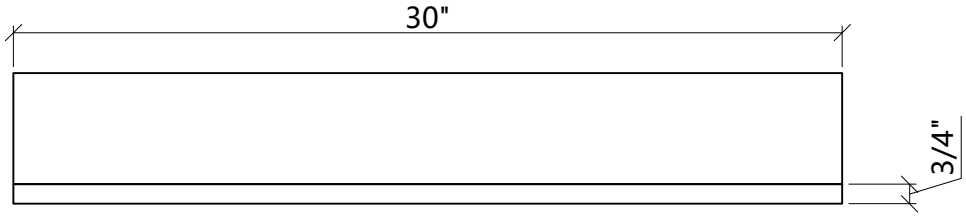
30"
3/4"

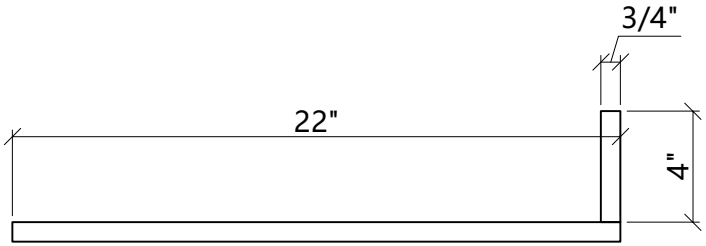
3/4"
22"
4"

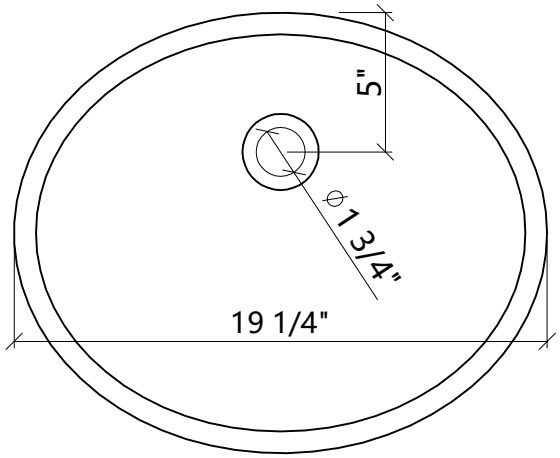
5"
⌀ 1 3/4"
19 1/4"

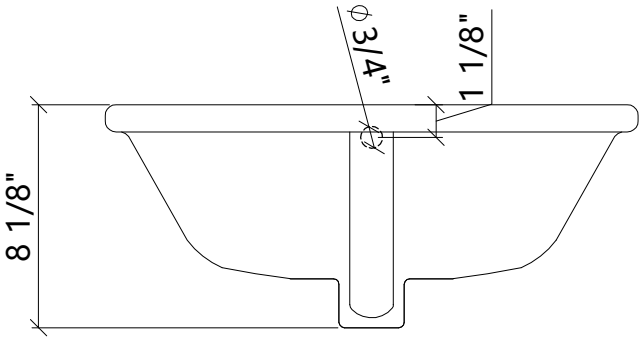
⌀ 3/4"
1 1/8"
8 1/8"

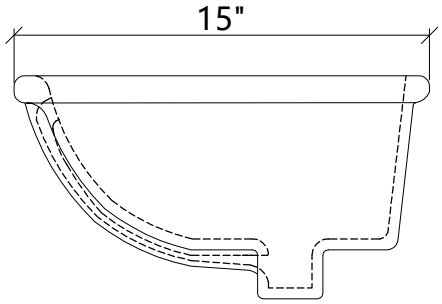
15"