SD062 MANUAL

Standard sofa

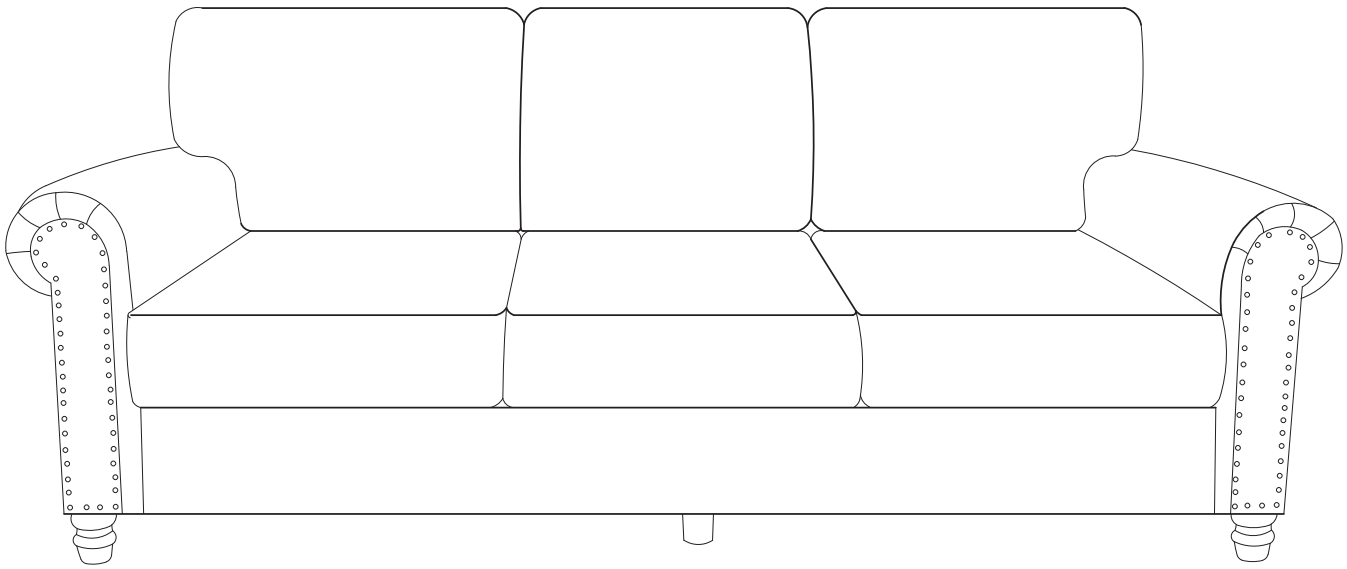

1. ASSEMBLE GUIDE

Thank you very much for choosing our product!

Please take time to read these instructions thoroughly and follow each step carefully for safe and easy operation. Keep this manual for future reference, especially for the safety information.

Also, it is better for you to assemble the chair in cooperation with 2-person, having a second person to help you makes it even easier.

Please read and understand this manual before any assembly. Before beginning assembly of product, make sure all parts are present. Compare parts with packaging contents list.

If any part is missing, damaged and any questions, please feel free to contact us.

PARTS LIST

Note: If you purchased the leather sofa, the components included in each box are shown below.
If you purchased the chenille fabric sofa, the components in each box will vary slightly. Specifically, Parts B, D, F, and H are not included.

	BOX A		
Part	A	B	C
Description	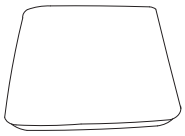	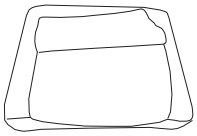	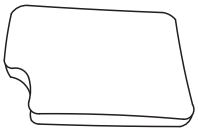
Qty	3PCS	3PCS	1PC
Part	D	E	F
Description	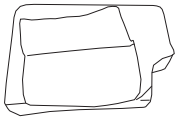	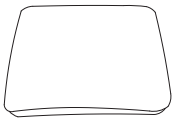	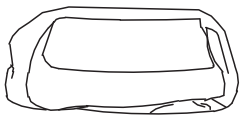
Qty	1PC	1PC	1PC
Part	G	H	I
Description	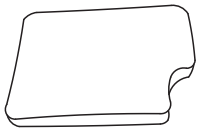	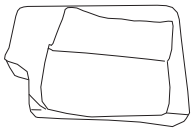	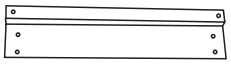
Qty	1PC	1PC	4PCS
Part	J	K	
Description	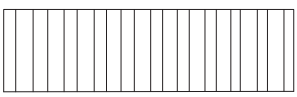	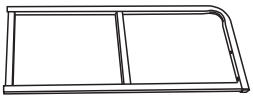	
Qty	1PC	2PCS	

PARTS LIST

	BOX B		
Part	L	M	N
Description	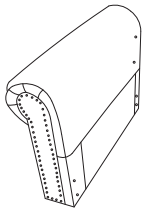	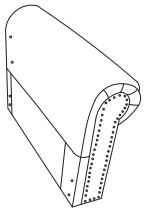	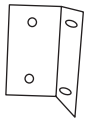
Qty	1PC	1PC	4PCS
Part	O	P	Q
Description			
Qty	2PCS	2PCS	1PC
Part	R	S	T
Description	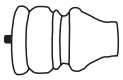		
Qty	4PCS	2PCS	1PC
Part	U	1	2
Description	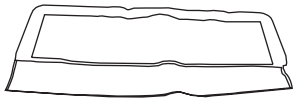		
Qty	1PC	6PCS	1PC

Part	3	4	5
Description	 M8*20	 M8*60	 M8*80
Qty	28PCS	4PCS	1PC
Part	6	7	
Description			
Qty	34PCS	1PC	

3. ASSEMBLY STEPS

Step1: Assemble the front and rear versions of the sofa seat frame,and assemble the connecting L-shaped iron onto the front and rear plates of the seat frame.

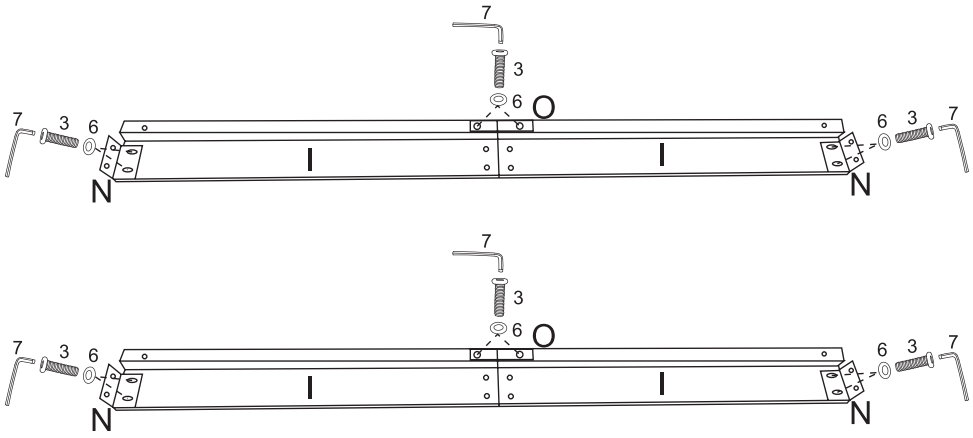

Pay attention to aligning the elliptical space with the seat frame plate.

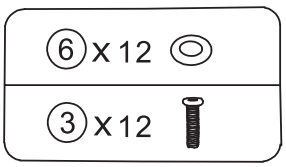

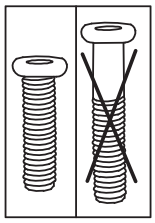

Step2: Smooth out the fabric cover T and secure it evenly to one of the newly installed panels.

The side with the opening in the fabric cover should be positioned at the upper edge of the sofa's front rail.

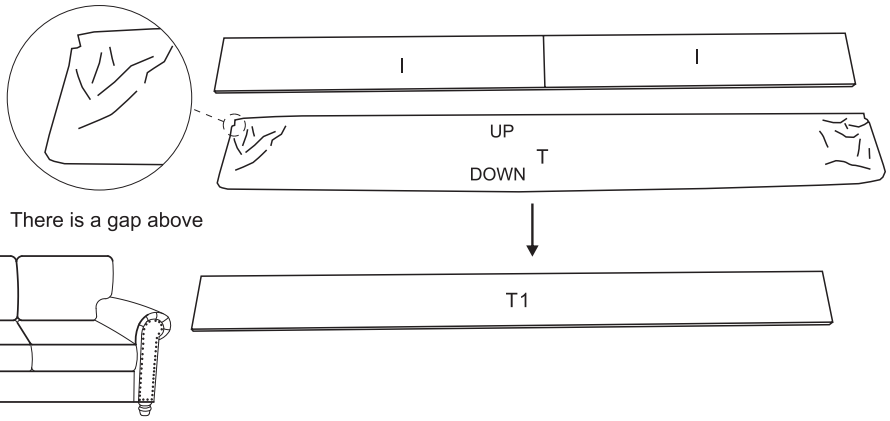

Note: This is a Velcro adhesive. It needs to be installed smoothly to ensure the overall appearance of the sofa.

3. ASSEMBLY STEPS

Step3: Connect the front and rear seat frame plates with intermediate connecting iron.

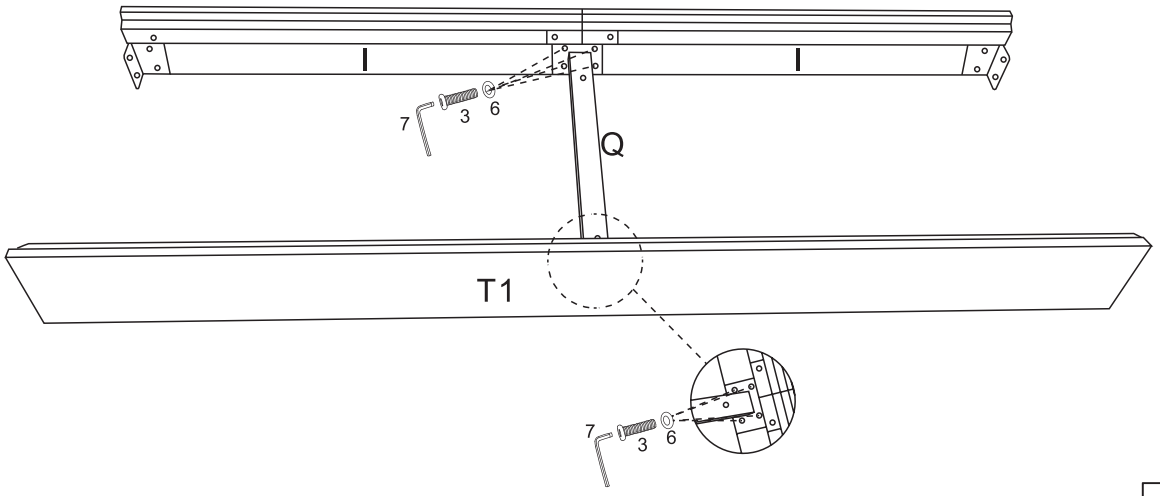

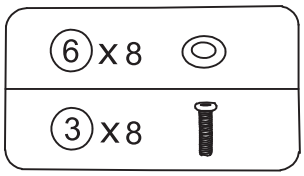

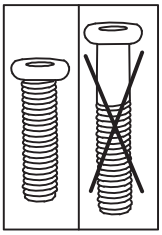

Step4: Connect the armrests with screws,but do not make them completely locked,otherwise the iron back frame behind it is inconvenient to install.

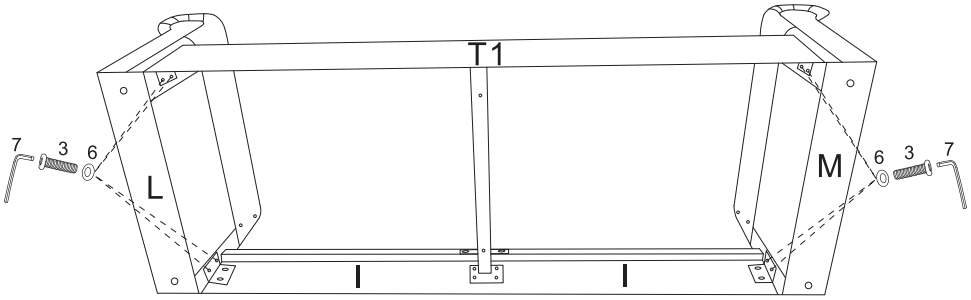

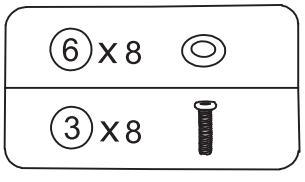

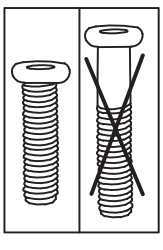

3. ASSEMBLY STEPS

Step5: Screw the sofa legs in securely to complete the installation.

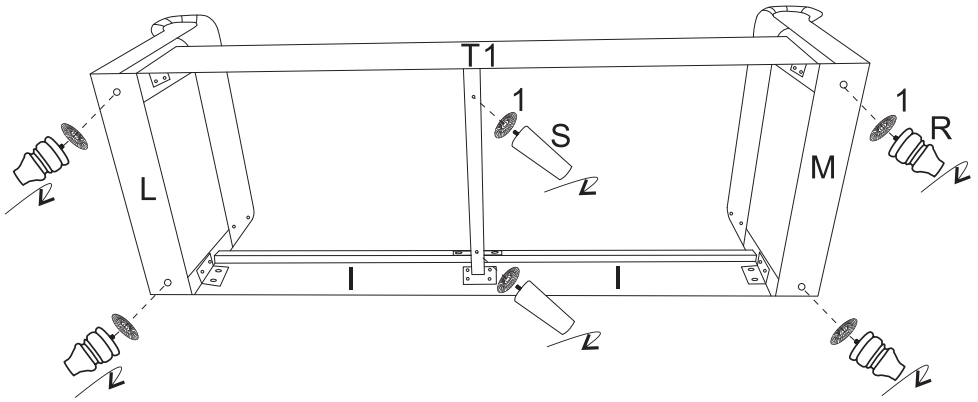

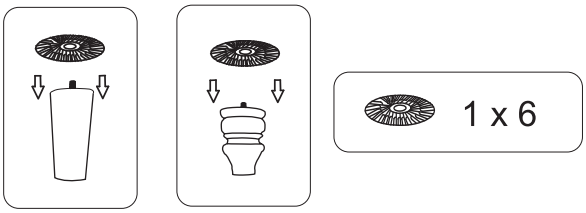

Step6: Assemble the iron back frame.

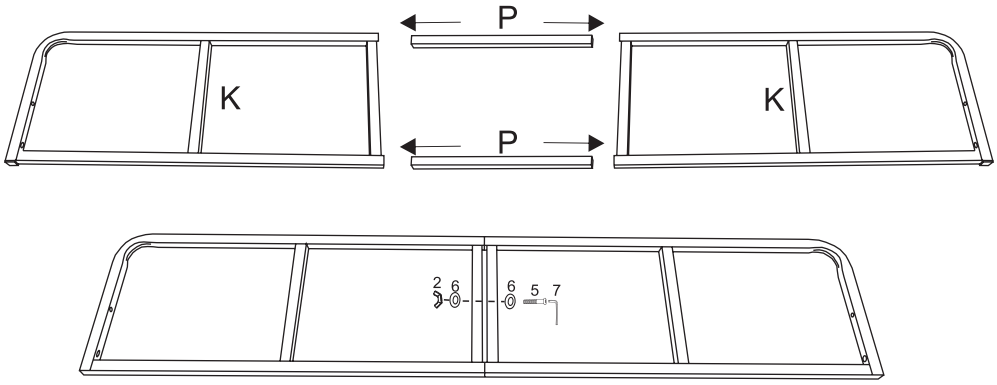

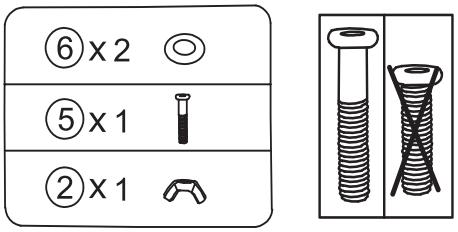

3. ASSEMBLY STEPS

Step7: Place fabric cover U over the newly installed back frame.

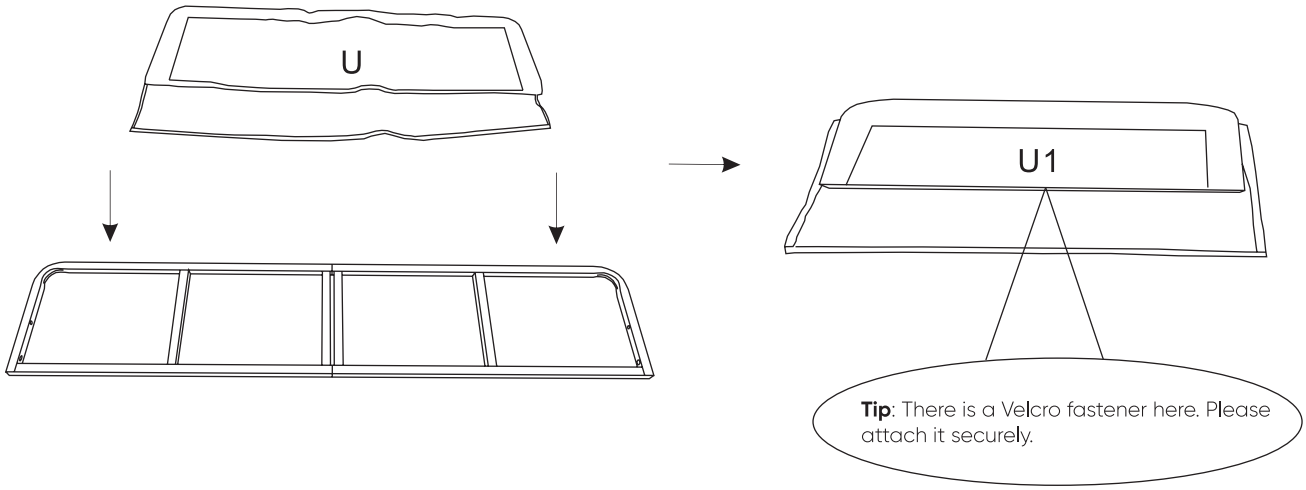

Step8: Secure the slats to the frame with Velcro.

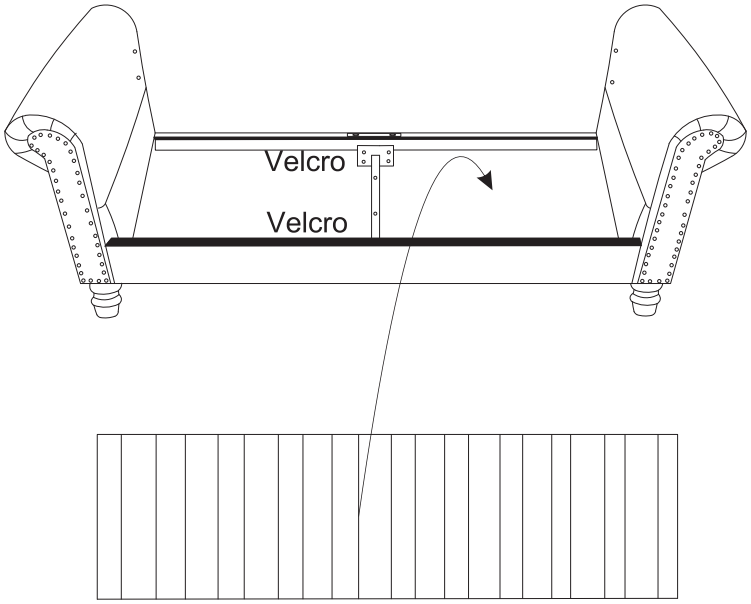

3. ASSEMBLY STEPS

Step9 : Assemble the iron back frame.Unzip the zipper and locate the hole position.Lock the iron back frame and then lock the armrest.

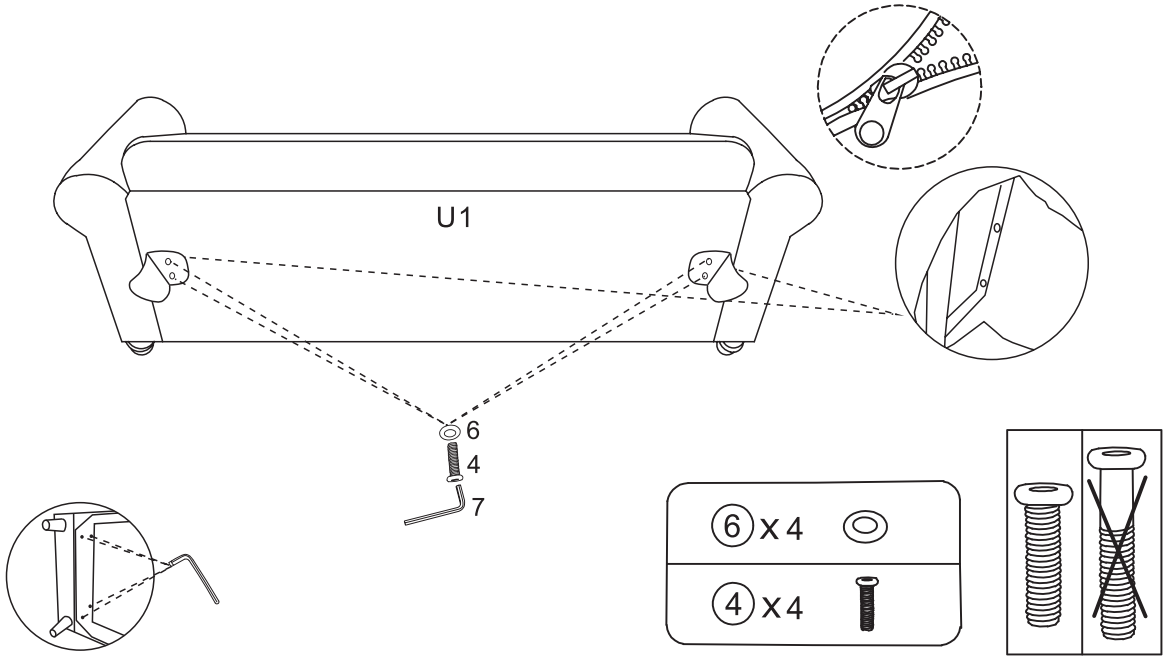

After locking the back frame, lock the left and right armrests again.

If you purchased the leather sofa, please install the back cushions and seat cushions as shown below.

Step10: Carefully use scissors to open all vacuum-sealed seat and back cushions. After unpacking, allow 48-72 hours for them to fully expand and return to their original shape.

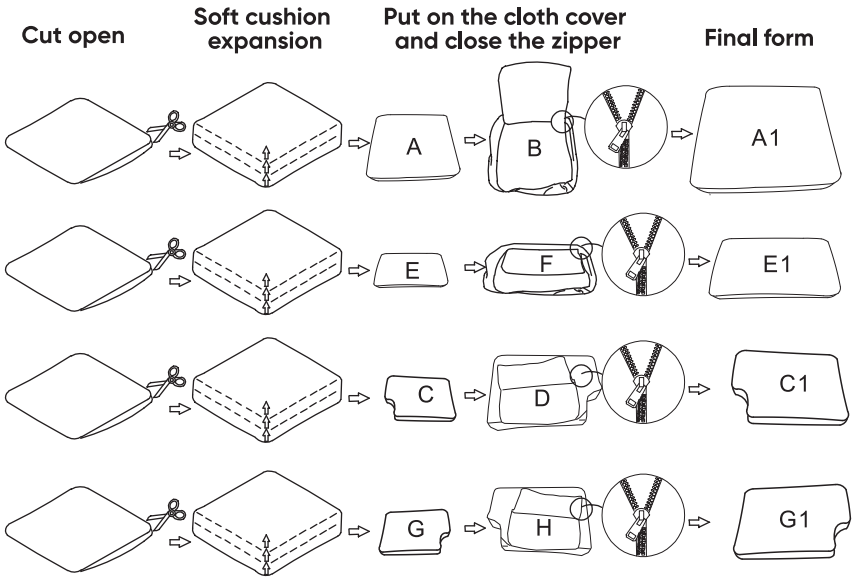

NOTE: After the soft cushion is unfolded, it can be kneaded by hand to aid in recovery.

3. ASSEMBLY STEPS

If you purchased the chenille fabric sofa, simply open the vacuum-sealed packaging as shown below.

Step10: Carefully use scissors to open all vacuum-sealed seat and back cushions. After unpacking, allow 48-72 hours for them to fully expand and return to their original shape.

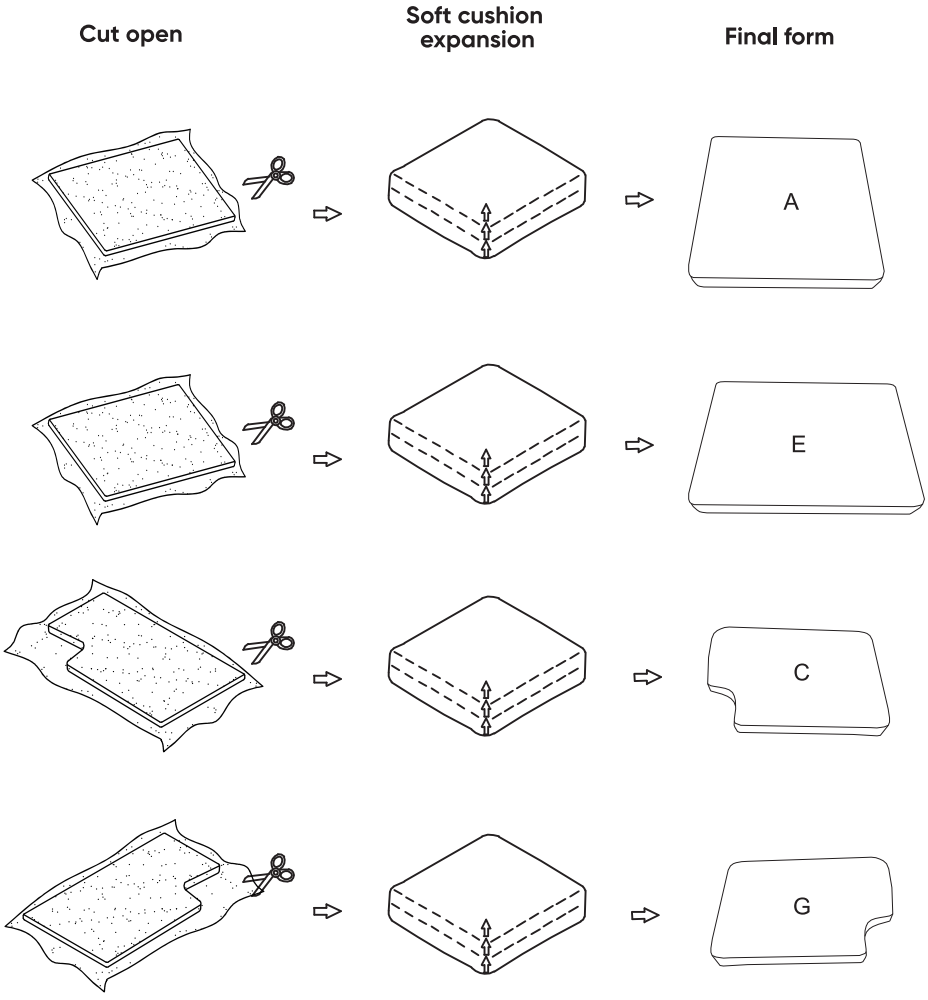

NOTE: After the soft cushion is unfolded, it can be kneaded by hand to aid in recovery.

3. ASSEMBLY STEPS

Step11 : According to the diagram, place the corresponding backrest and seat cushion in the designated position to complete the installation.

Leather

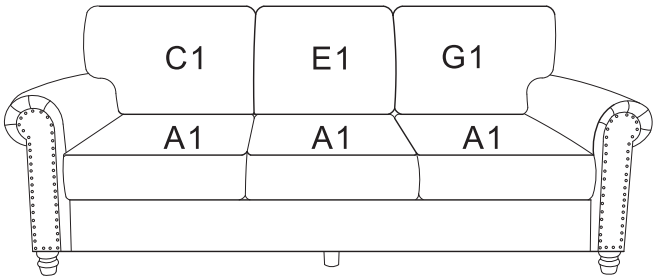

Fabric

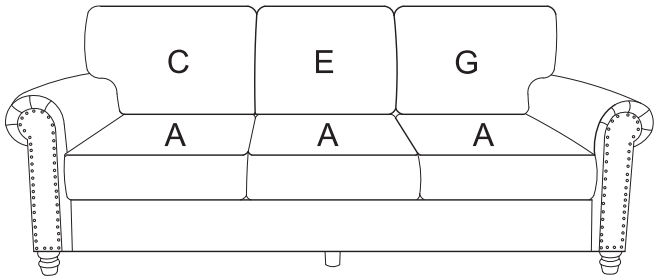

Assembly completed

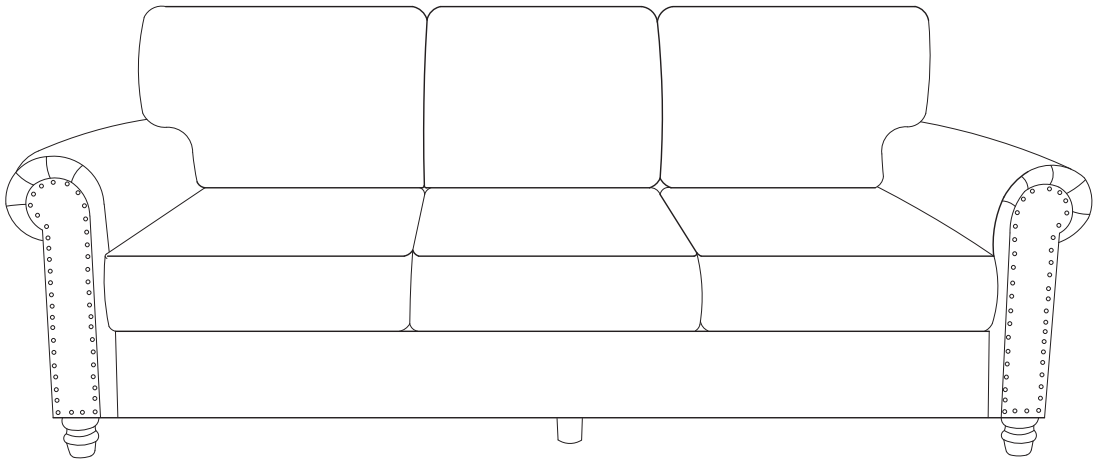

5. TROUBLESHOOTING

1.What should I do if my shipment is damaged or products received are defective?

We're sorry to hear that! Please contact us and provide adetailed description of the damage, as well as photos (or videos, where appropriate) showing the damage.
We will do our best to resolve the issue as soon as possible.

2.Can replacement parts be ordered?

Just write to our customer service team and let us know your order lD.
and we will be happy to provide further assistance.

3.Who do I contact for repair queries?

Easy! Just email us and provide a detailed description of the fault
as well as photos.

4. How do I claim my warranty?

You can write to us to specify your inquiry, and we will be able to assist you further.

6.What should I do if I want to return the product?

We offer 30-day returnn policy upon product received. To initiate a return request,please message us and with your reason of returning so we canfacilitate the request and assist you further. For more details on the return policy,please refer to Return section.

6. PRODUCT CARE

• Dust regularly with a soft,dry cloth to prevent soil build-up.Keep away from heat to avoid glazing,melting or scorching.Use a professional cleaning service to clean the fabric.

7. WARNING

• This product is not intended for institutional or commercial use.
• FALL HAZARD - To prevent death or serious injury, always keep child within arm's reach.
• Avoid placing this item in direct sunlight to prevent fading.
• Check this product for damaged hardware, loose joints, missing parts or sharp edges before and after assembly and frequently during use.

✱ Customer Service

Any Problem Please Contact Us

• If you have any questions, please provide the order number and related pictures to show the problem through email.
We will reply to you within 24 hours, and solve the problem as soon as possible.