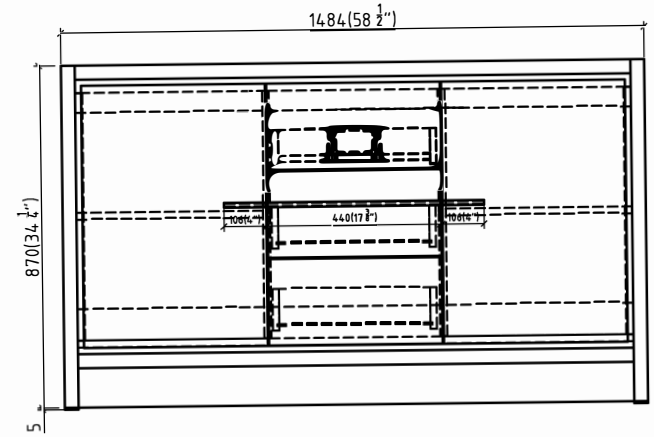

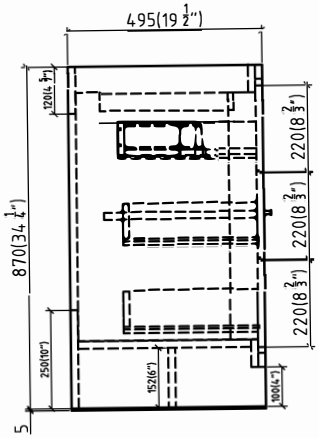

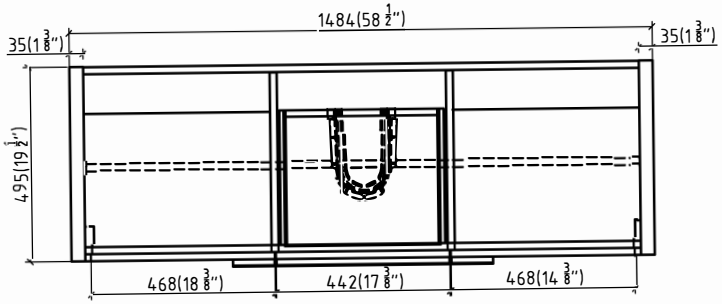

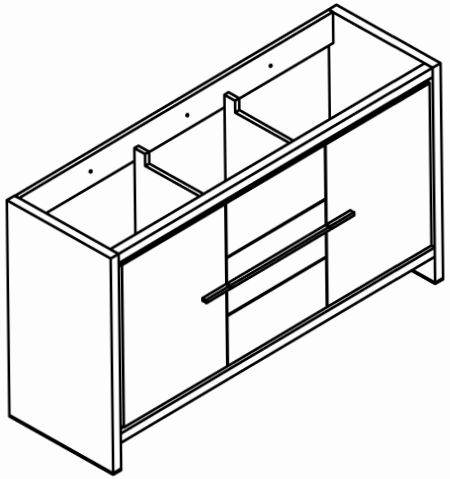

Designer: 0-502
2016.06.14