SB Series Base Cabinet

2 Door & 2 fake Drawer

Step-by-Step Assembly Instructions

CODE	ITEM	QTY
A	FRONT FACE	1 SET
B	RIGHT SIDE PANEL	1 PC
C	LEFT SIDE PANEL	1 PC
D	BOTTOM PANEL	1 PC
E	BACK PLANE	1 PC
F	TOE KICK PLATE	1 PC
G	DOOR PANEL	2 PCS

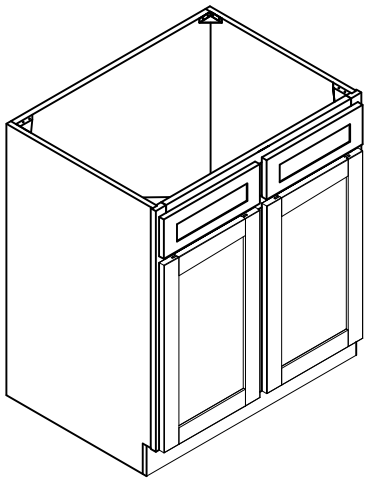

STEP 1

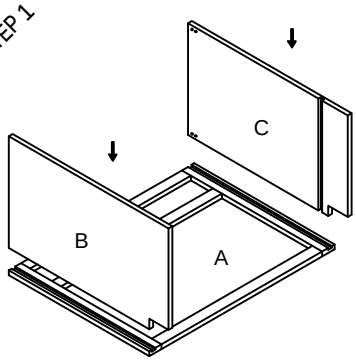

Lay A flat, grooves facing upward
insert B & C into grooves of A

STEP 2

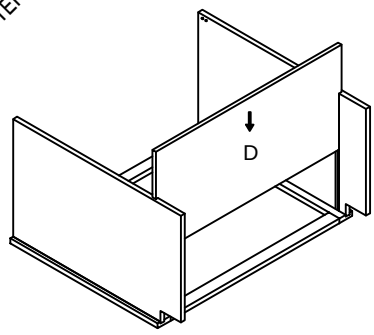

Slide D into grooves A, B & C

STEP 3

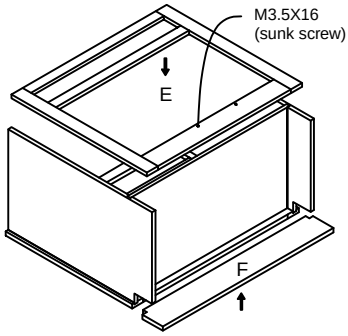

Attach E onto B & C with L-Bracket
Attach F onto bottom of B & C with L-Bracket

STEP 4

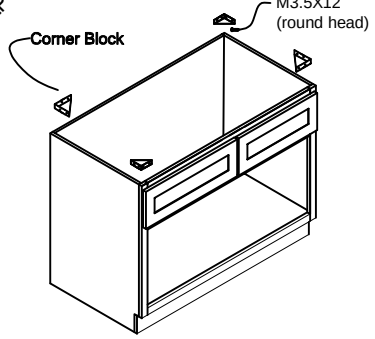

Attach corner block into corners of
A & B & C & E with round head screws

STEP 5

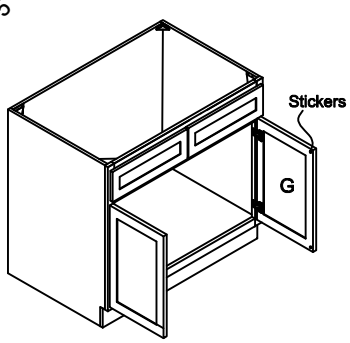

Attach G as illustrated
Attach cushion stickers

