ASSEMBLY INSTRUCTION
62C

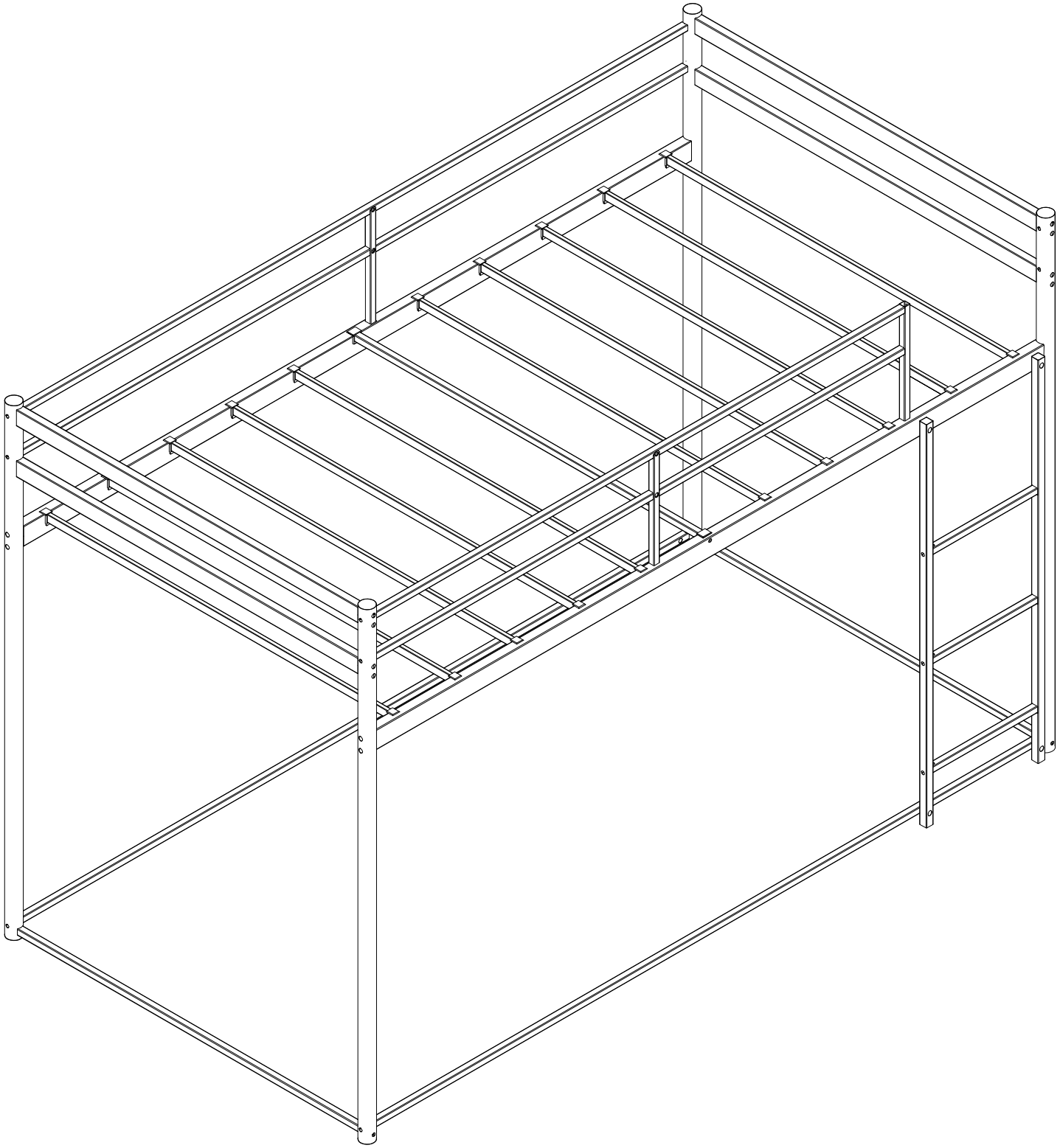

IMPORTANT NOTE

1.Please check that all parts are complete before installation.
2.Please strictly follow the installation steps to install.
3.Please install the bed on a clean and smooth surface to prevent any damage
4.Please do not use the power tools to assemble the bed.
5.Please periodically check all the fittings and re-tighten as necessary.
6. Please do not use the bed unless all bolts and screw are firmly secured.
7.When assembling the bed, first secure the screws loosely, then tighten them all at the end after all parts are assembled.

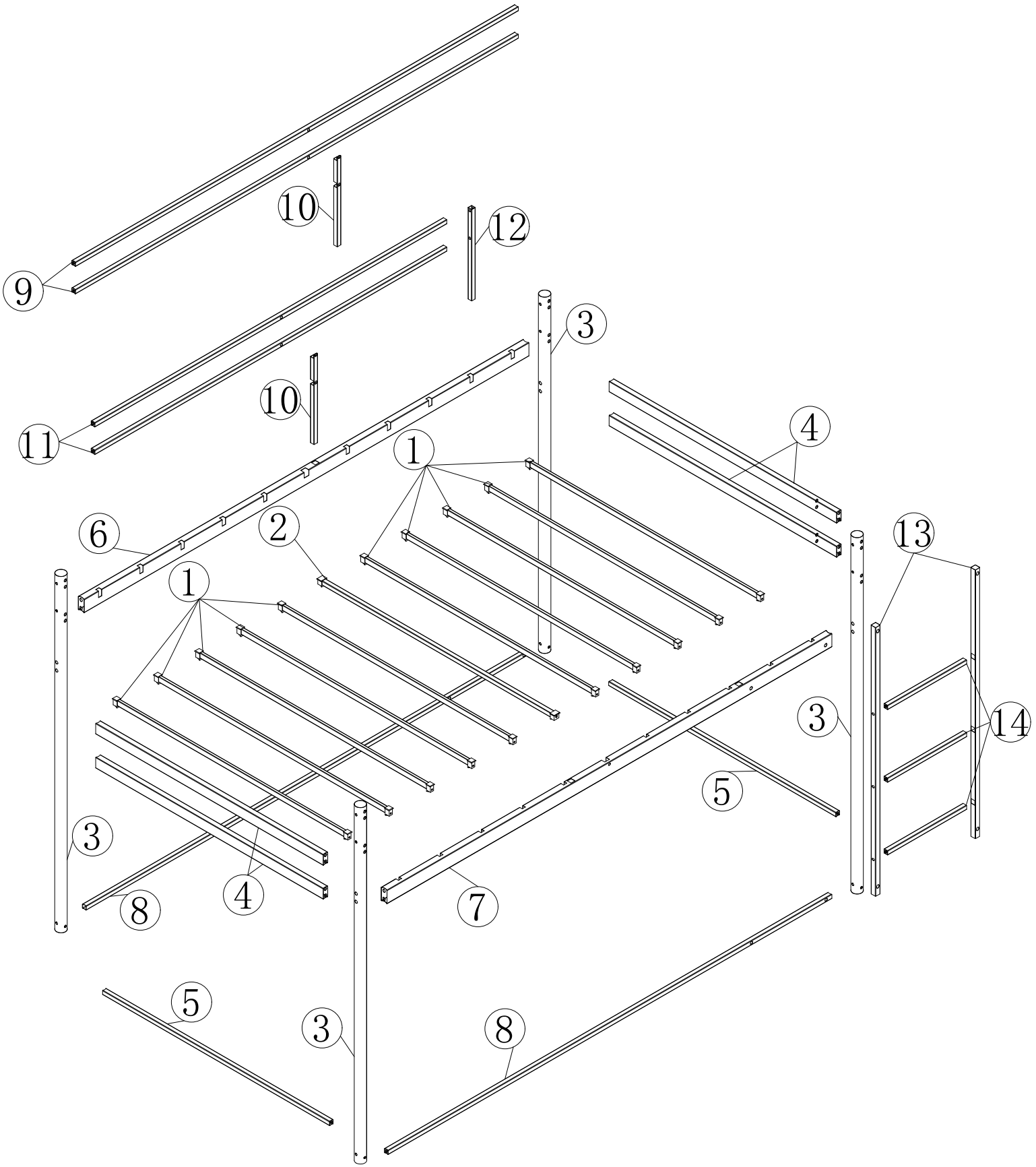
9
10
12
11
10
3
4
1
6
2
1
13
3
14
5
3
4
8
7
5
3
8

Components List

① x10 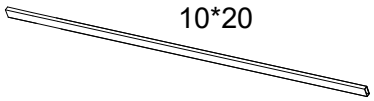	② x1 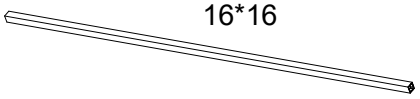
③ x4 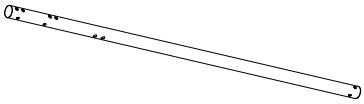	④ x4 
⑤ x2 	⑥ x1 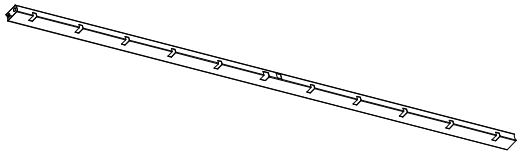
⑦ x1 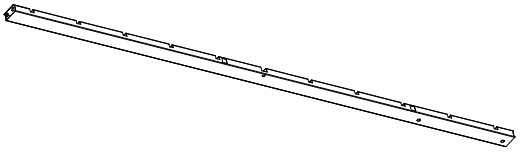	⑧ x2 
⑨ x2 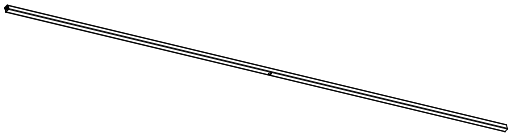	⑩ x2 
⑪ x2 	⑫ x1 
⑬ x2 	⑭ x3 

Hardwares List

Item	Description	Qty
A	 M8x60	24
B	 M8x30	4
C	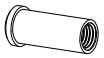 M8x25	4
D	 M6x60	6
E	 M6x50	8
F	 M6x40	2
G	 M6x30	2
H	 M6x20	9
I	 M6x12	4
J	 M6 x12	4
K	 SMALL	38

Item	Description	Qty
L	 (10*20)	20
M	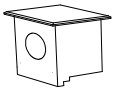 (16*16)	2
P	 M6x35	4
Q		4
R		2
S	 M6 Allen key	2
T	 M8 Allen key	2
U	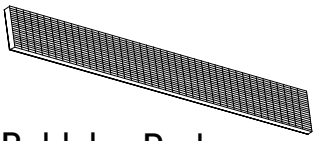 Bubble Pads	3
V	 16x16	1
W		4

STEP1

A	M8x60	16

E	M6x50	4

K	SMALL	20

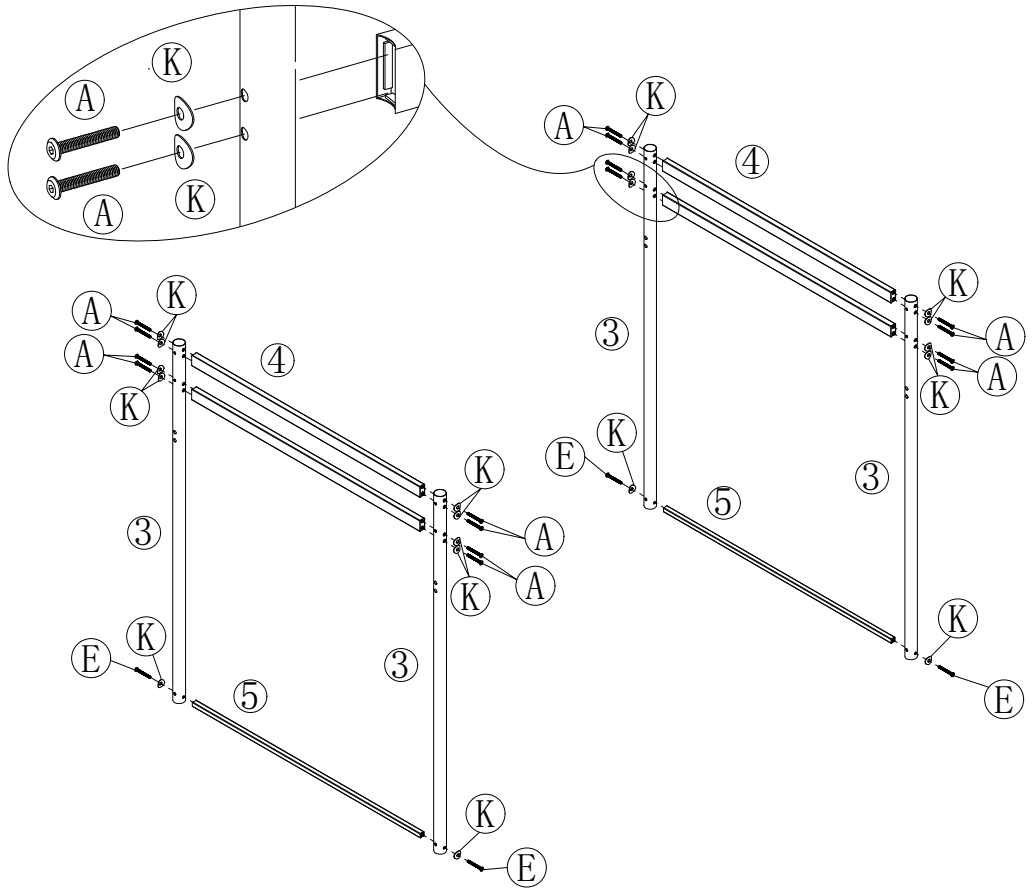

STEP2

A	M8x60	8

E	M6x50	4

F	M6x40	2

K	SMALL	12

L	(10x20)	20

M	(16x16)	2

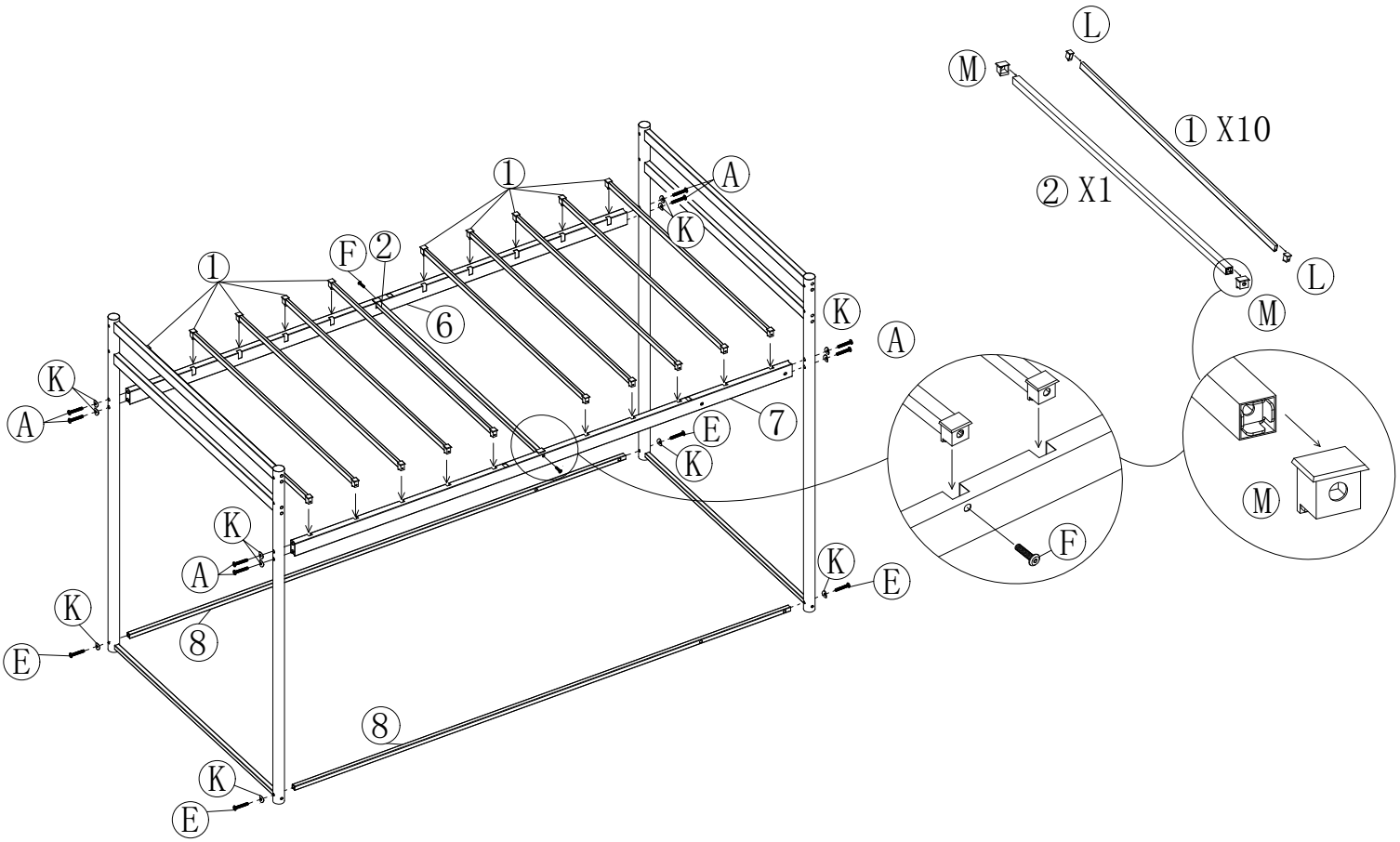

STEP3

D		M6x60	6	G		M6x30	2	H		M6x20	3
I		M6x12	4	J		M6 x12	4	K		SMALL	6
V		16x16	1	W			4				

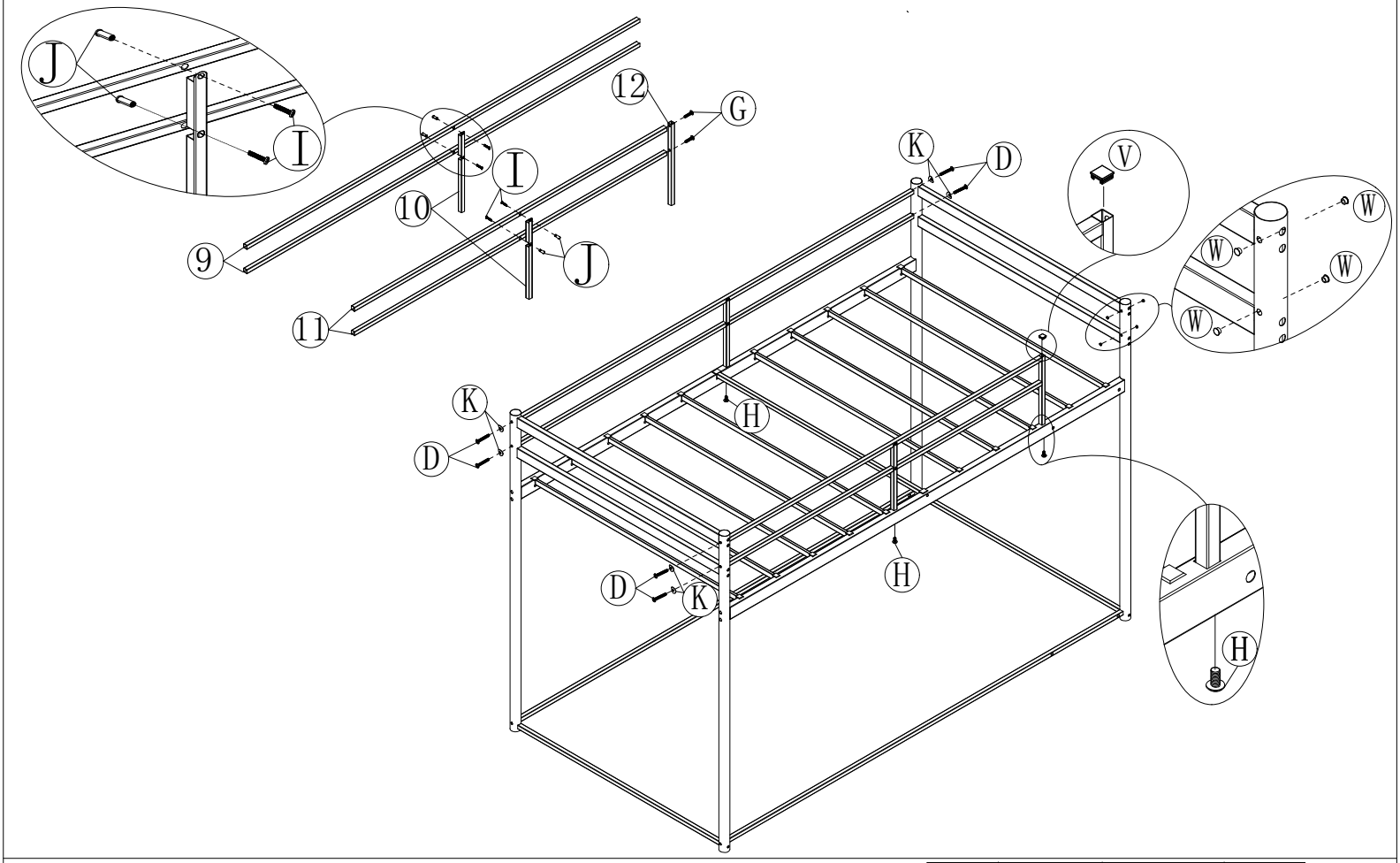

STEP4

B		M8x30	4	C		M8 x25	4	H		M6x20	6
P		M6x30	4	Q			4	R			2
U		Bubble Pads	3								

