ASSEMBLY INSTRUCTION
36INCH MIRROR CABINET

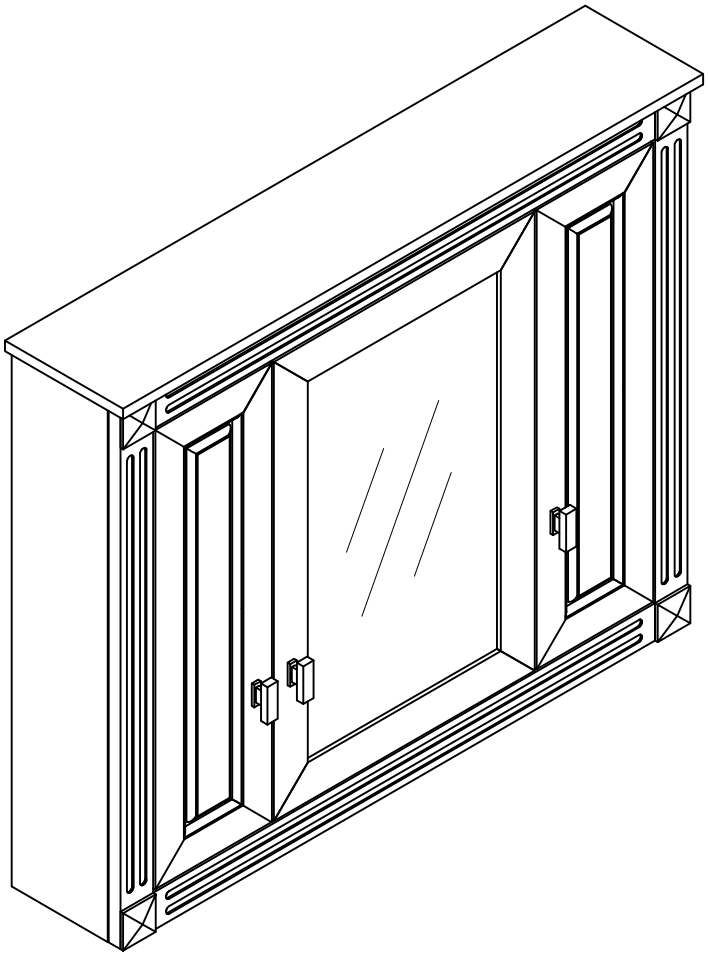

Thank you for purchasing this quality product. Be sure to check all packing material carefully for small parts which may have come loose inside the carton during shipment. Separate, identify and count all parts and hardware. Compare with the parts list to be sure all parts are present.
"DO NOT TIGHTEN SCREWS UNTIL COMPLETELY ASSEMBLED"

* Use of power tool to assemble this product will invalidate any claim and damage this product making unsafe !!!
* Please assemble on a clean soft surface to avoid damage.

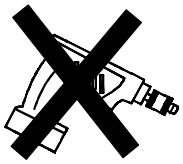

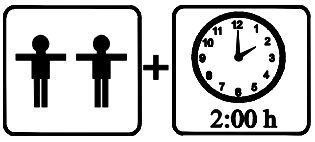

Tools Required

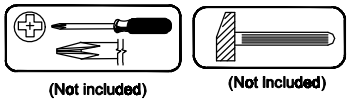

IMPORTANT:

PLEASE READ INSTRUCTION BEFORE STARTING THE ASSEMBLY

PLEASE DO NOT RETURN TO STORE

Please do not return this product to the retailer!!
We are able to assist you in ANY way

If you find that you have any trouble with assembly or missing or damaged parts please contact the seller.

Before Installation

Important – Please read these instructions fully before starting assembly

Thank you for purchasing this quality product. Be sure to check all packing materials carefully for small parts, which may have come loose inside the carton during shipment. Identify and count all items according to the PARTS LIST and/or HARDWARE LIST shown below. Check you have all the components and tools listed on the following pages.

- We recommend that you assemble this product with the assistance of another person; this will make the assembly easier, and will help eliminate damage to the product or injury to persons during assembly.
- Please do not over tighten screws or bolts until the assembly is completed.
- Keep children and animal away from the work area, small parts could choke if swallowed.
- Please put all parts on a non-abrasive floor before assembly,and follow the assembly steps to assemble your newly purchased product correctly and efficently.

Cam Lock Assembly Instructions

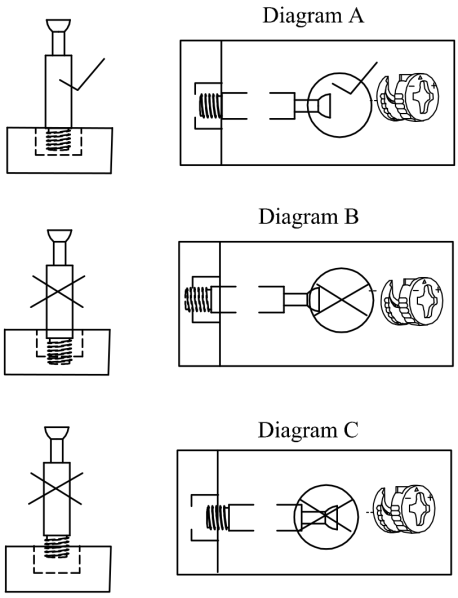

Insert Cam Bolt into hole as shown in diagram A.

Make sure not to insert the Cam Bolt:
Too deep as shown in figure B as this will cause the Cam Lock to be misaligned and unable to interlock properly.

Also avoid inserting the Cam Bolt too close to the surface of the hole as shown in figure C, as this will cause the Cam Lock to be too loose, and not interlock properly.

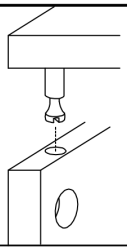

Connect the panels together.

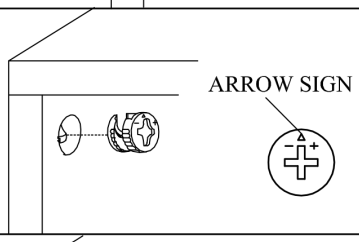

Insert the Cam Lock so the side opening fits over the head of the Cam Bolt.

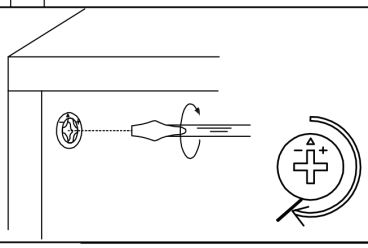

To tighten the Cam Lock, turn it clockwise on half a turn with a flat screwdriver.
**Do not use an automatic screwdriver as it may bend or break if too much power is imposed.*

Detail View - CABINET

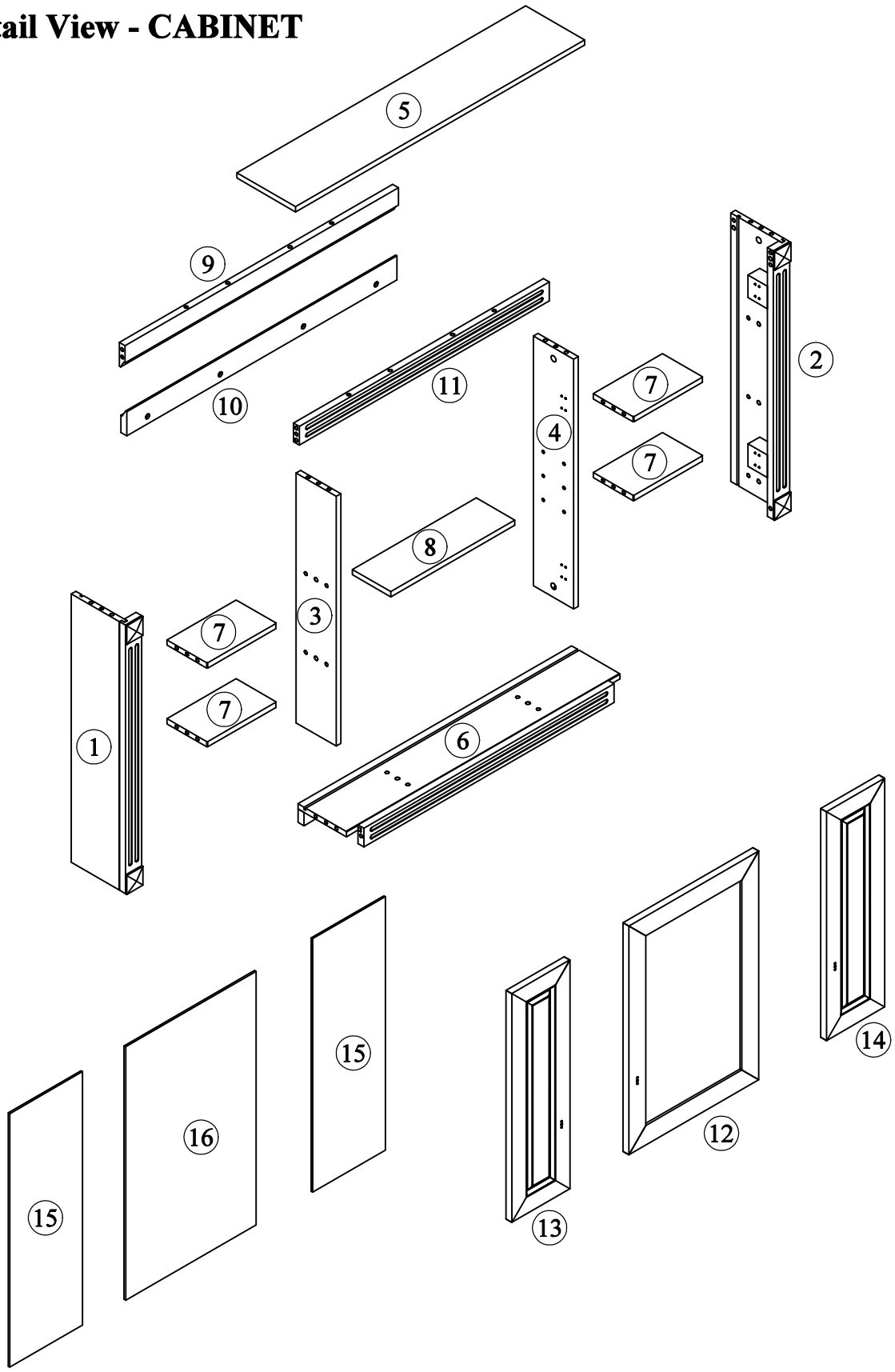

Identifying the Hardware -Indentify the hardware using the illustrations below.

Part List

1 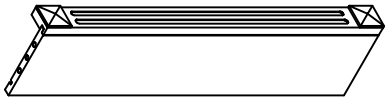 Side Panel (L) - 1pc	2 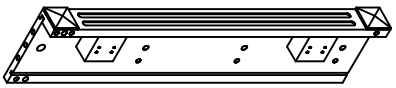 Side Panel (R) - 1pc
3 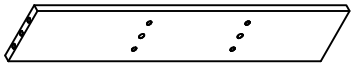 Mid Panel (L) - 1pc	4 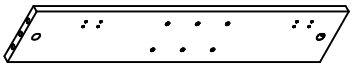 Mid Panel (R) - 1pc
5 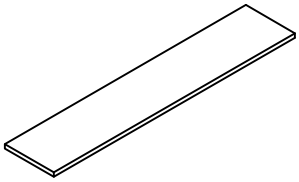 Top Panel - 1pc	6 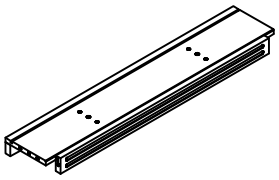 Bottom Panel - 1pc
7 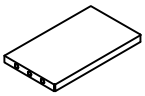 Panel Left + Right - 4pcs	8 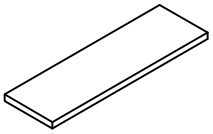 Adjustable Shelf - 1pc
9 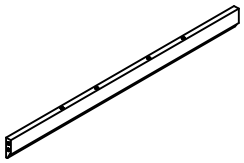 Top Rear Bar - 1pc	10 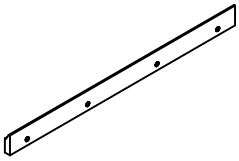 Connect Bar - 1pc
11 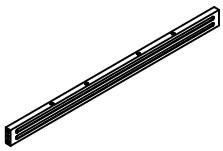 Top Front Bar - 1pc	12 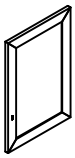 Mid Door - 1pc
13 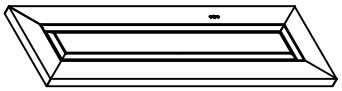 Left Door - 1pc	14 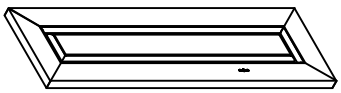 Right Door - 1pc

Part List

15 Left +Right Back Panel - 2pcs	16 Mid Back Panel - 1pc

Hardware List

A ø6x35mm	B ø14.5x12mm	C ø10xø5x50mm
Three in one bolts (24pcs)	Three in one lock (24pcs)	Flat head screw (4pcs)
D ø12x55mm	E	F ø5/32"x22mm
Plastic stopper (4pcs)	Handle (3pcs)	Handle screw (3pcs)
G	H	I ø7xø3.5x15mm
Damping hinge (4pcs)	Damping hinge (2pcs)	Flat head screw (36pcs)
J	K ø8x30mm	L ø7xø3.5x15mm
Laminate pad (4pcs)	Wood dowel (44pcs)	Round head screw (6pcs)

STEP: 1

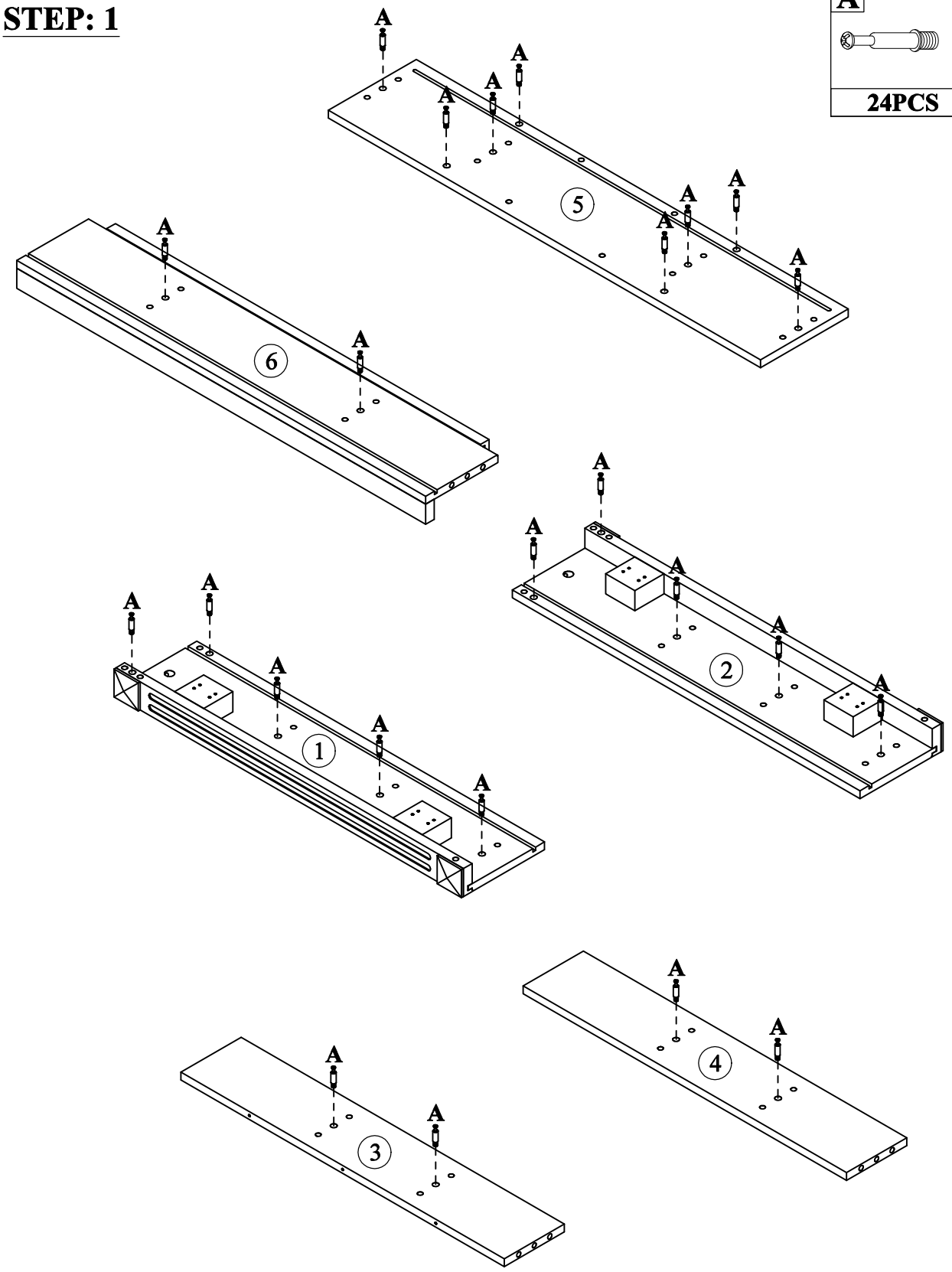

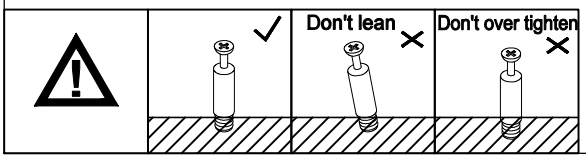

STEP: 2

B	K
4PCS	8PCS

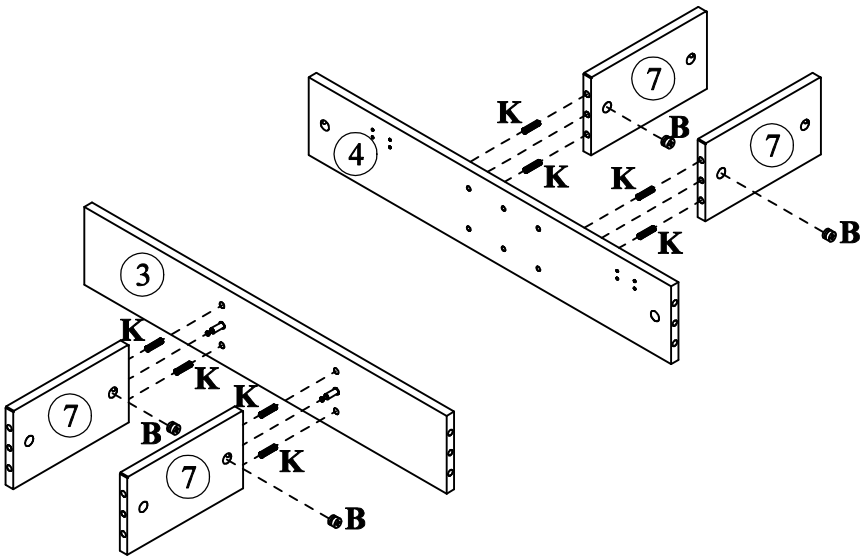

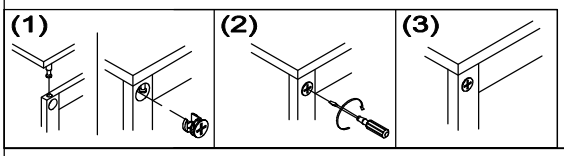

STEP: 3

B	K
2PCS	4PCS

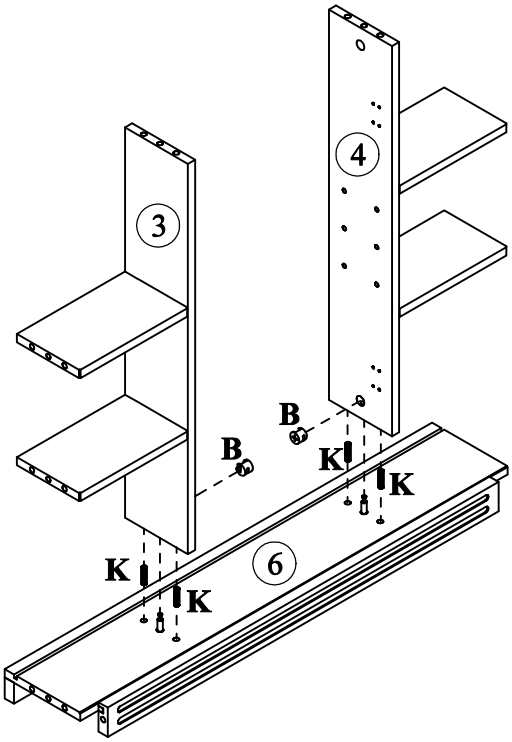

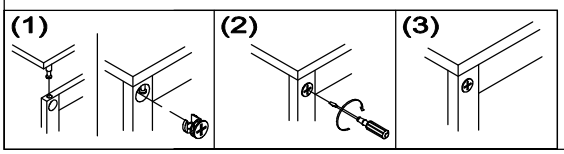

STEP: 4

B	K
10PCS	20PCS

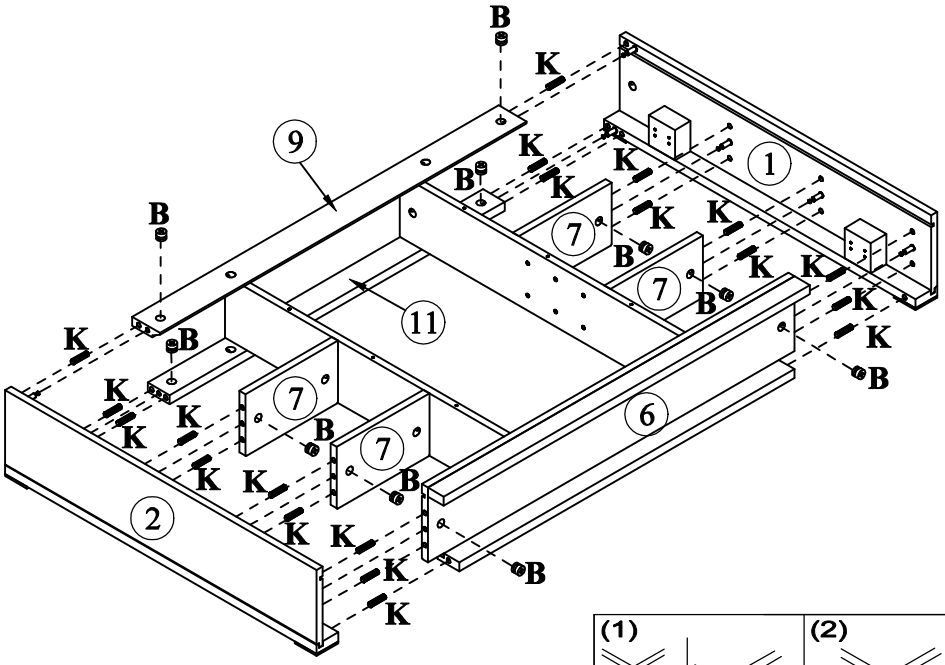

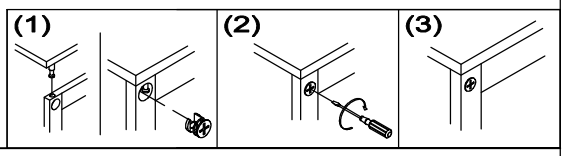

STEP: 5

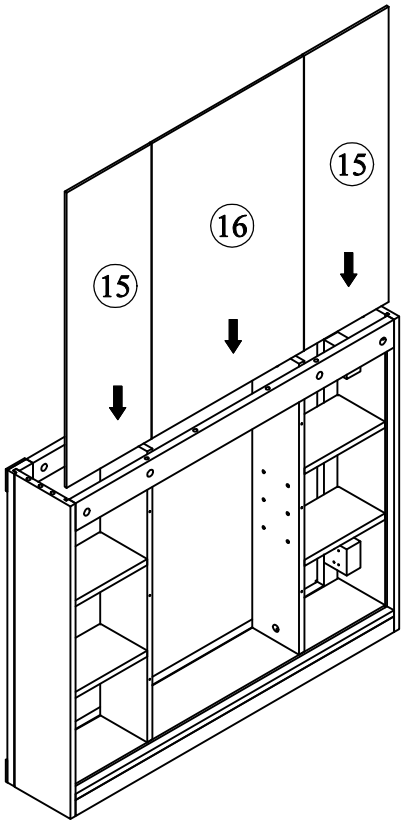

STEP: 6

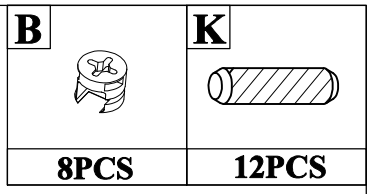

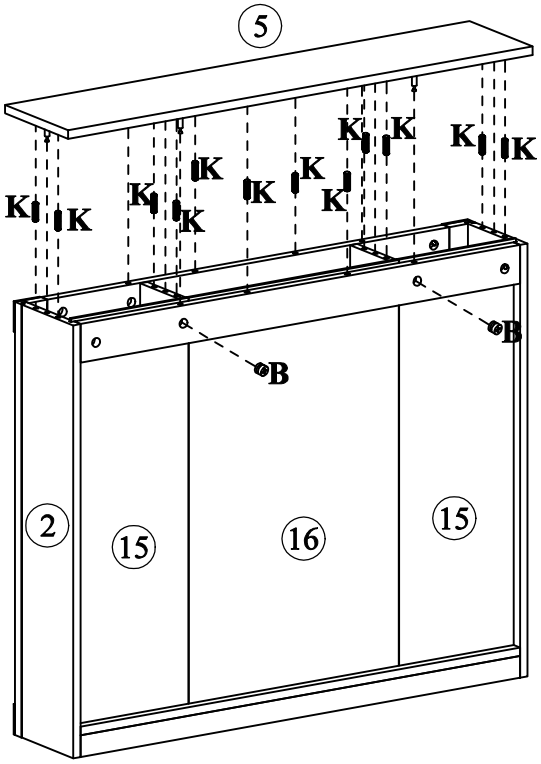

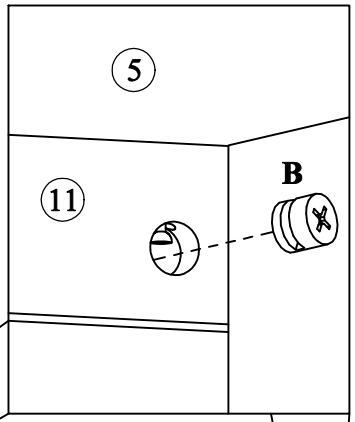

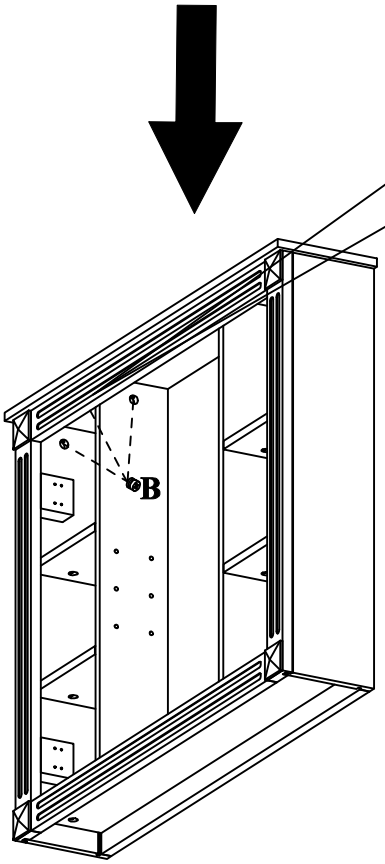

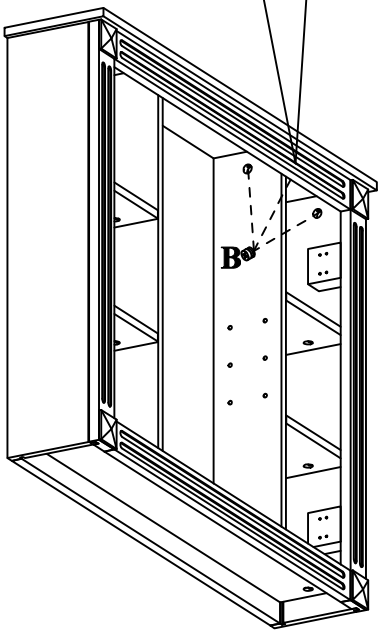

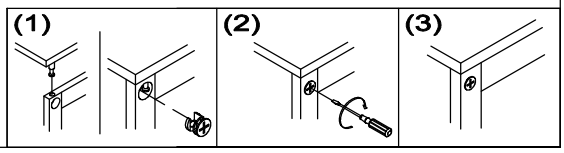

STEP: 7

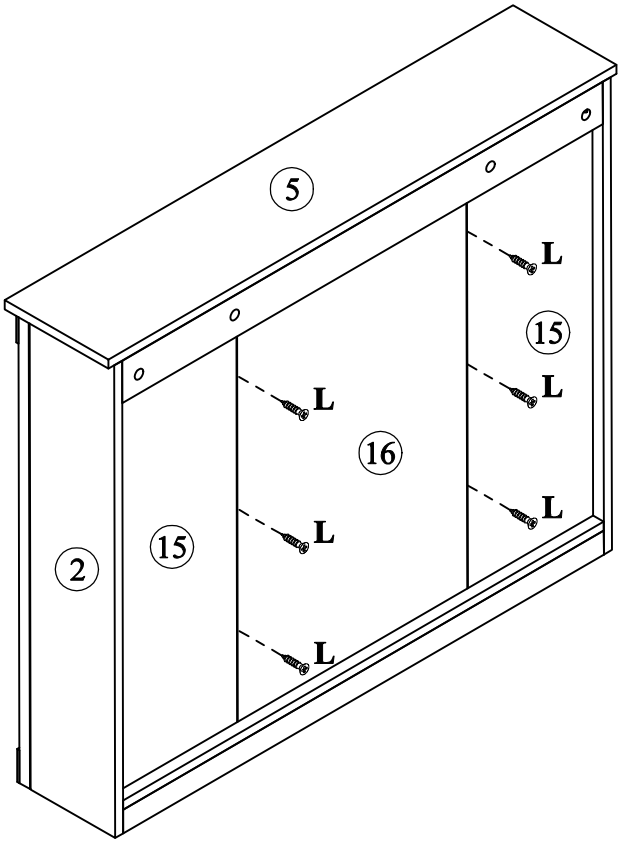

L
6PCS

STEP: 8

G	H	I
4PCS	2PCS	12PCS

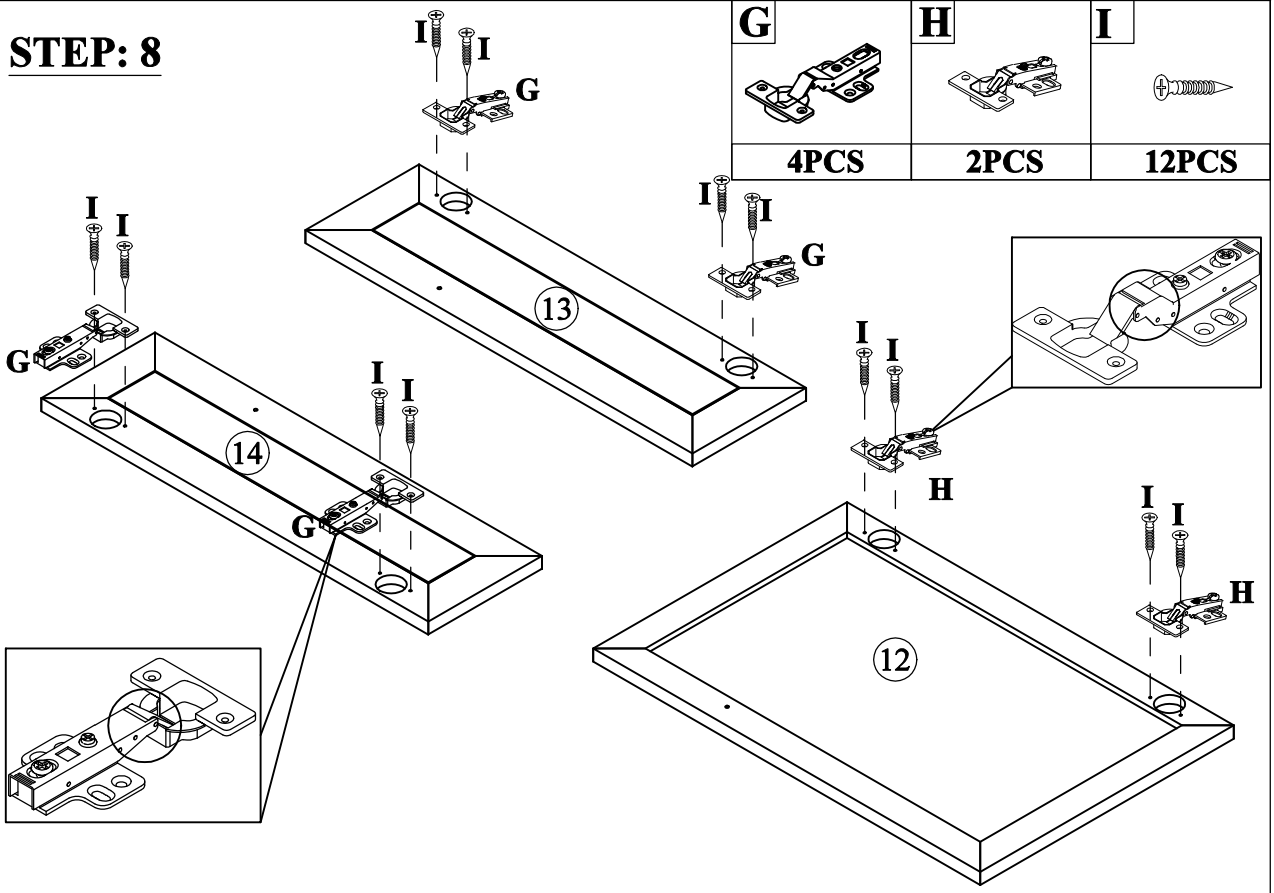

*** Please note that hinges G and H are diferent, please do not install them backwards.**

STEP: 9

E	F	I
3PCS	3PCS	24PCS

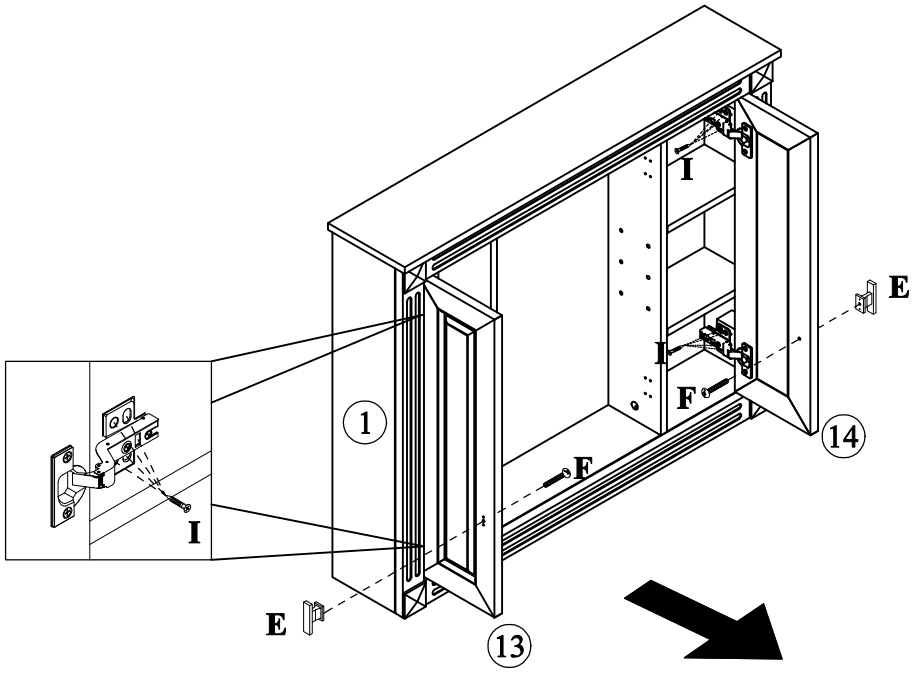

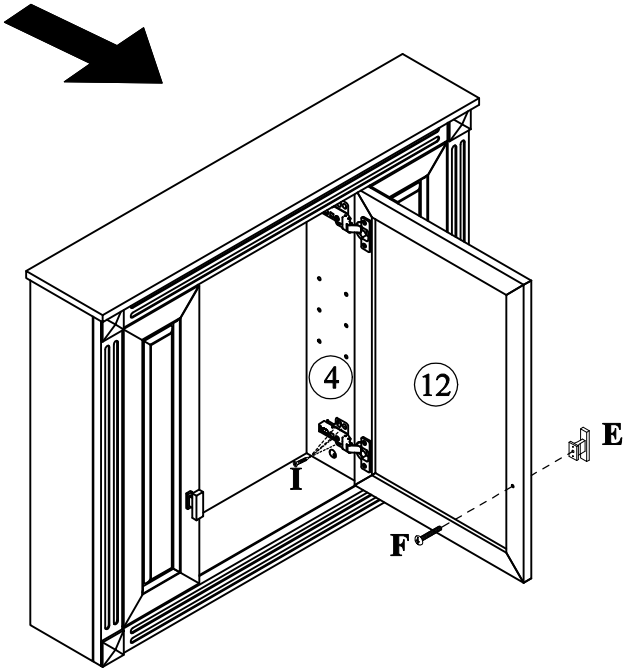

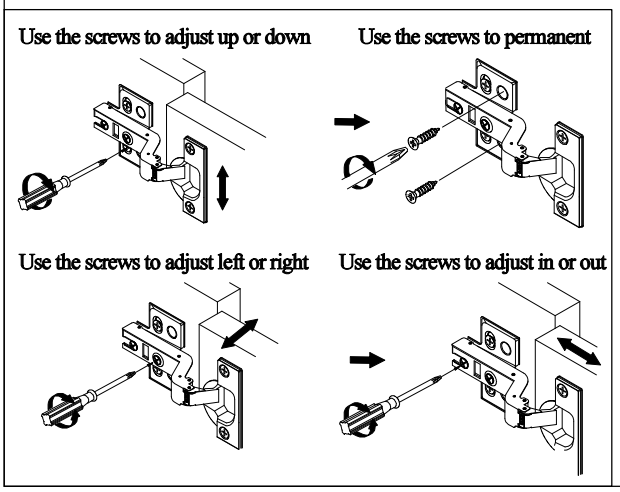

STEP: 10

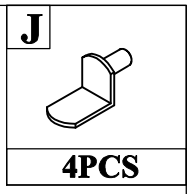

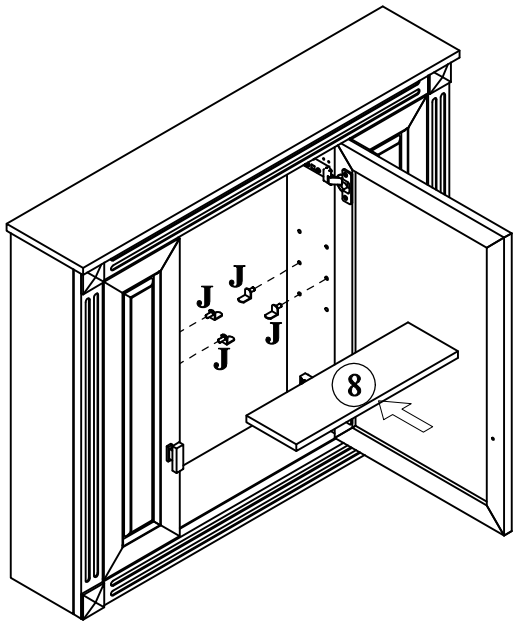

STEP: 11

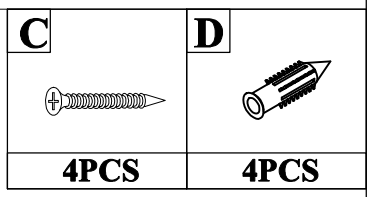

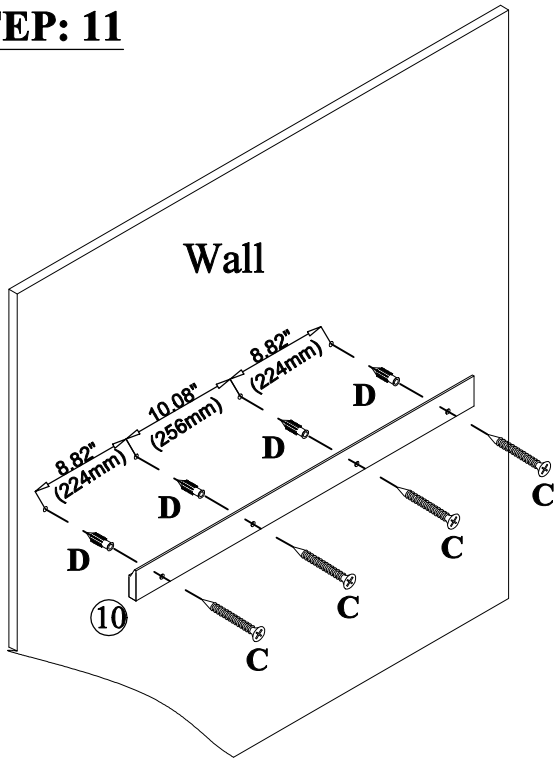

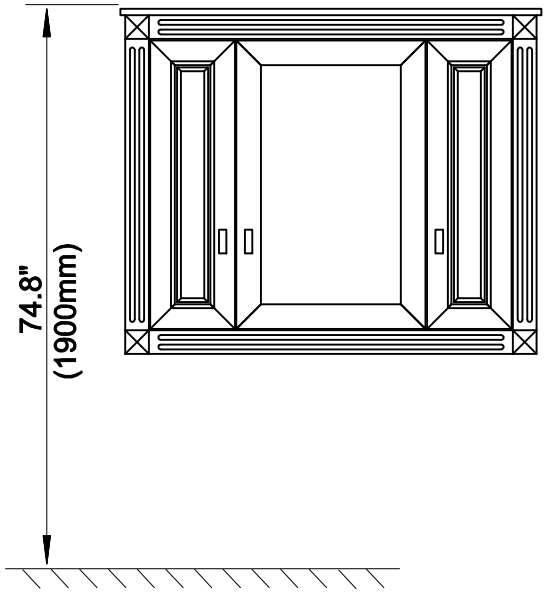

Draw the spacing between the walls and the No.10, punch holes in the wall, and fix the No.10 to the wall with screws.
Note: Appropriate distance from the top of cabinet to the ground is 74.8".

STEP: 12

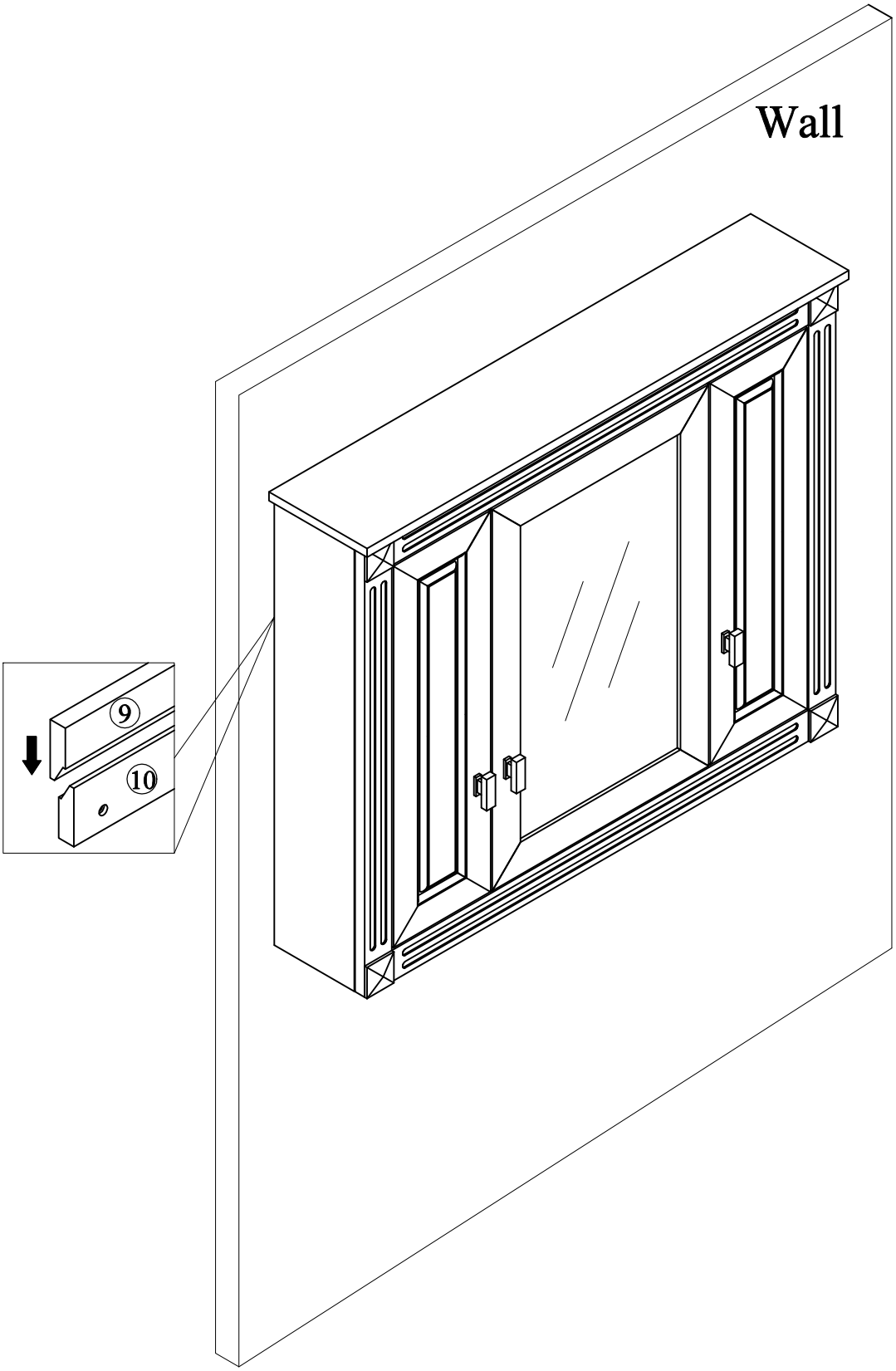

STEP: 13

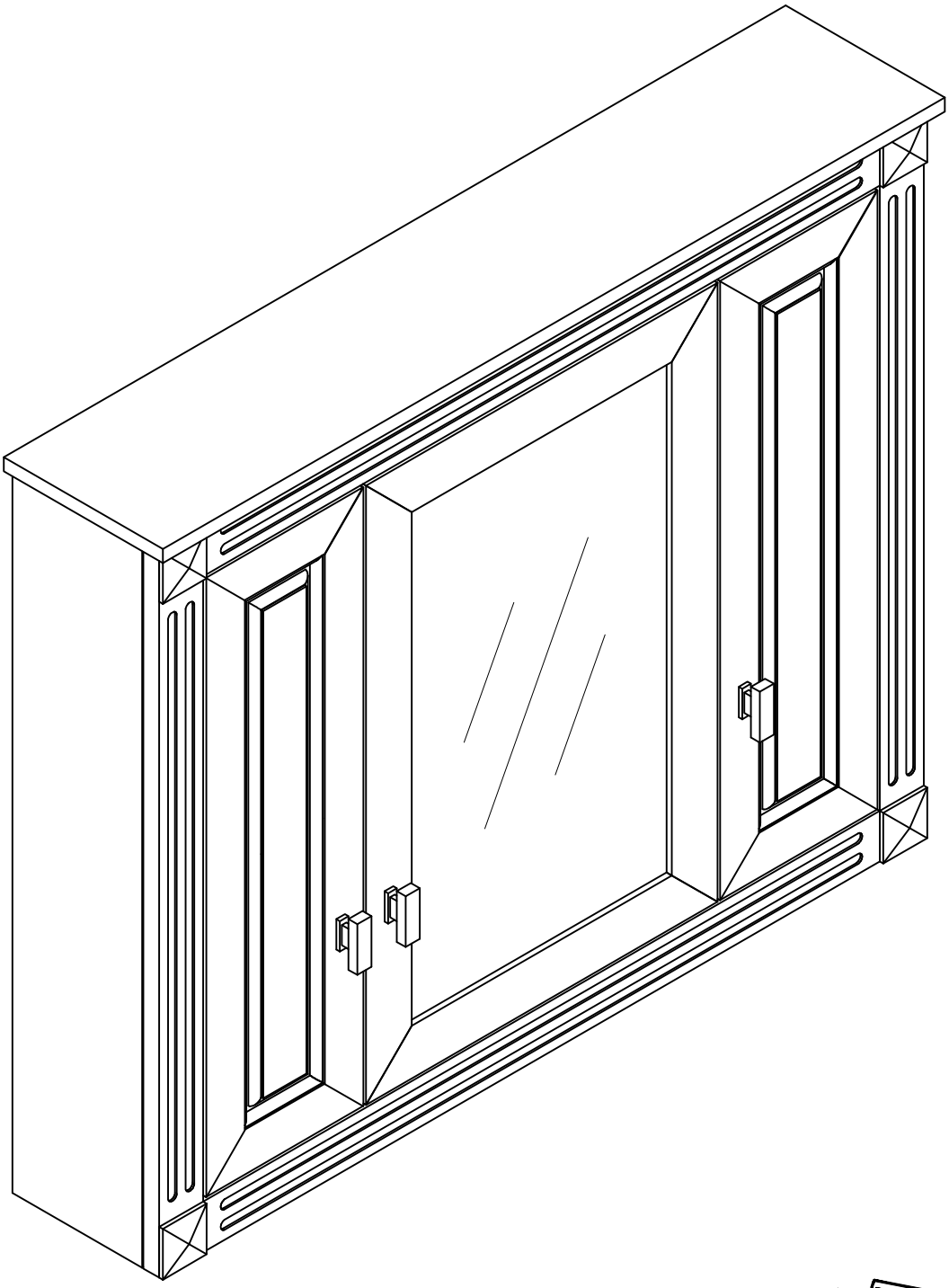

HINGE ADJUSTMENTS

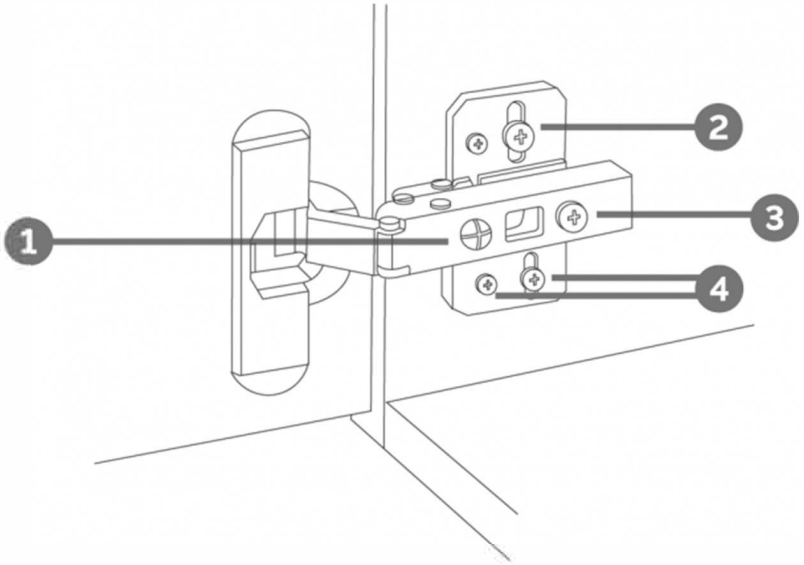

1 Sideways / Tilt adjustment

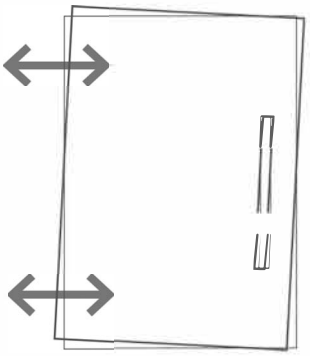

Turn the screw
clockwise to move the door further away from the side of the cabinet
anticlockwise to move the door closer to the side of the cabinet

2 4 Height adjustment

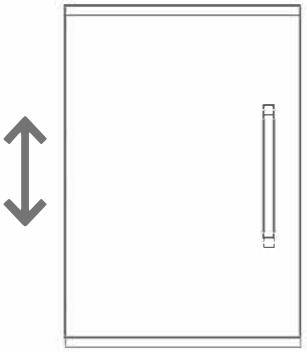

While supporting the weight of the door, turn the screws
clockwise to move the door up
anticlockwise to move the door down

3 Forward and back adjustment

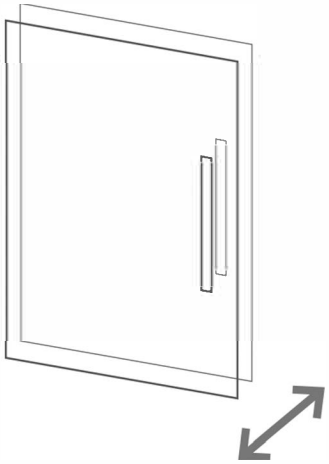

If the gap between the back of the door and the cabinet is too small, and the door may not close fully. Turn the screw
clockwise to decrease the gap between the door and the cabinet
anticlockwise to increase the gap between the door and the cabinet